Corning
Optical Communications

Corning CORE System MA2000
User Manual

DRAFT

P/N 709C006503 | REV:A00 | DATE: APRIL 2014

CORNING

Warranties

Hardware

Corning Optical Communications warrants to the original purchaser ("Customer") that for the duration of the warranty period, one (1) year, commencing on the date of shipment of the Hardware, unless otherwise agreed in writing by Corning Optical Communications (the "Hardware Warranty Period"), the Hardware furnished by Corning Optical Communications shall be free in all material respects from defects in material and workmanship, and shall conform to the applicable portions of the Specifications, as defined below (the "Hardware Warranty"). If notified by Customer of any such defects in material or workmanship or nonconformity with applicable portions of the Specifications within the Hardware Warranty Period, Corning Optical Communications shall promptly, at its own election and expense, repair or replace any such Hardware proven to be defective under the terms of this Hardware Warranty. Such repair or replacement shall be Customer's sole remedy and Corning Optical Communications' sole obligation in the event this Hardware Warranty is invoked. If any components comprising a part of the Hardware are replaced or repaired during the Hardware Warranty Period, the Hardware Warranty Period for such repaired or replaced components shall extend to the longer of (i) the balance of the Hardware Warranty Period or (ii) three (3) months from the date of repair or replacement. For purposes of this Warranty, "Specifications" shall mean the specifications and performance standards of the Products as set forth in documents published by Corning Optical Communications s and delivered to Customer which contain technical specifications or performance standards for the Products.

If Customer invokes this Hardware Warranty, it shall notify Corning Optical Communications promptly of the claimed defect. Customer will allow Corning Optical Communications to inspect the Hardware at Customer's location, or to return the Hardware to Corning Optical Communications' closest repair facility. For Hardware returned to Corning Optical Communications' repair facility, Customer shall be responsible for payment of all transportation and freight costs (including insurance) to Corning Optical Communications' repair facility, and Corning Optical Communications shall be responsible for all transportation and freight costs (including insurance) incurred in connection with the shipment of such Hardware to other repair facilities of Corning Optical Communications and/or its return to Customer.

Notwithstanding the foregoing, in no event will Corning Optical Communications be liable for damage to Products resulting from improper handling during or after shipment, misuse, neglect, improper installation, operation or repair (other than by authorized Corning Optical Communications personnel), alteration, accident, or for any other cause not attributable to defects in materials or workmanship on the part of Corning Optical Communications. Corning Optical Communications shall not reimburse or make any allowance to Customer for any labor charges incurred by Customer for replacement or repair of any goods unless such charges are authorized in advance in writing by Corning Optical Communications.

Software Warranty

Corning Optical Communications warrants to the original purchaser ("Customer") that for the duration of the warranty period, one (1) year, commencing on the date of shipment of the Software, unless otherwise agreed in writing by Corning Optical Communications (the "Software Warranty Period"), the Software shall conform with, and perform the functions set forth in the Specifications, and shall be free from defects in material or workmanship (the "Software Warranty"). In the event the Software is proven to be defective under the terms of this Software Warranty, Corning Optical Communications shall correct such defects or failure and ensure that the Software conforms with, and performs the functions set forth in, the Specifications. Customer will allow Corning Optical Communications to inspect the Software at Customer's location or to return it to Corning Optical Communications' closest repair facility.

Notwithstanding the foregoing, Corning Optical Communications shall have no obligation under the Software Warranty if the Software is modified or used with hardware or software not supplied or approved by Corning Optical Communications or if the Software is subject to abuse, improper installation or application, accident, electrical or environmental over-stress, negligence in use, storage, transportation or handling.

Third-party software distributed with the Software may carry certain warranties which, to the maximum extent allowed by law, Corning Optical Communications s hereby assigns, transfers and otherwise conveys to Customer, provided, however, that

DRAFT

Corning Optical Communications itself provides no warranty of any kind, express, implied, statutory or otherwise, for any third-party software provided hereunder.

Corning Optical Communications does not warrant any hardware, software or services not provided by Corning Optical Communications.

THIS WARRANTY IS THE ONLY WARRANTY MADE BY CORNING OPTICAL COMMUNICATIONS AND IS IN LIEU OF ALL OTHER WARRANTIES, EXPRESS OR IMPLIED INCLUDING, BUT NOT LIMITED TO, THE IMPLIED WARRANTIES OF MERCHANTABILITY AND FITNESS FOR A PARTICULAR PURPOSE. CORNING OPTICAL COMMUNICATIONSS SHALL NOT BE LIABLE FOR ANY OTHER DAMAGE INCLUDING, BUT NOT LIMITED TO, INDIRECT, SPECIAL OR CONSEQUENTIAL DAMAGES ARISING OUT OF OR IN CONNECTION WITH FURNISHING OF GOODS, PARTS AND SERVICE HEREUNDER, OR THE PERFORMANCE, USE OF, OR INABILITY TO USE THE GOODS, PARTS AND SERVICE. CORNING OPTICAL COMMUNICATIONS SALES AGENTS OR REPRESENTATIVES ARE NOT AUTHORIZED TO MAKE COMMITMENTS ON WARRANTY RETURNS.

Returns

In the event that it is necessary to return any product against above warranty, the following procedure shall be followed:

1. Return authorization is to be received from Corning Optical Communications prior to returning any unit. Advise Corning Optical Communications of the model, Serial number, and discrepancy. The unit may then be forwarded to Corning Optical Communications, transportation prepaid. Devices returned collect or without authorization may not be accepted.
2. Prior to repair, Corning Optical Communications will advise the customer of our test results and any charges for repairing customer-caused problems or out-of-warranty conditions etc.
3. Repaired products are warranted for the balance of the original warranty period, or at least 90 days from date of shipment.

Limitations of Liabilities

Corning Optical Communications' liability on any claim, of any kind, including negligence for any loss or damage arising from, connected with, or resulting from the purchase order, contract, quotation, or from the performance or breach thereof, or from the design, manufacture, sale, delivery, installation, inspection, operation or use of any equipment covered by or furnished under this contact, shall in no case exceed the purchase price of the device which gives rise to the claim.

Except as expressly provided herein, Corning Optical Communications makes no warranty, expressed or implied, with respect to any goods, parts and services provided in connection with this agreement including, but not limited to, the implied warranties of merchantability and fitness for a particular purpose. Corning Optical Communications shall not be liable for any other damage including, but not limited to, indirect, special or consequential damages arising out of or in connection with furnishing of goods, parts and service hereunder, or the performance, use of, or inability to use the goods, parts and service.

Reporting Defects

Note: Keep all packing material until you have completed the inspection.

The units were inspected before shipment and found to be free of mechanical and electrical defects. Examine the units for any damage that may have been caused in transit. If damage is discovered, file a claim with the freight carrier immediately. Notify Corning Optical Communications as soon as possible in writing.

DRAFT

Warnings and Admonishments

There may be situations, particularly for workplace environments near high-powered RF sources, where recommended limits for safe exposure of human beings to RF energy could be exceeded. In such cases, restrictive measures or actions may be necessary to ensure the safe use of RF energy.

The equipment has been designed and constructed to prevent, as far as reasonably, practicable danger. Any work activity on or near equipment involving installation, operation or maintenance must be, as far as reasonably, free from danger.

Where there is a risk of damage to electrical systems involving adverse weather, extreme temperatures, wet, corrosive or dirty conditions, flammable or explosive atmospheres, the system must be suitably installed to prevent danger.

Equipment provided for the purpose of protecting individuals from electrical risk must be suitable for the purpose and properly maintained and used. This covers a range of activities including lifting, lowering, pushing, pulling, carrying, moving, holding or restraining an object, animal or person from the equipment. It also covers activities that require the use of force or effort, such as pulling a lever, or operating power tools.

Where some of the abovementioned activities are required, the equipment must be handled with care to avoid being damaged.

Observe standard precautions for handling ESD-sensitive devices. Assume that all solid-state electronic devices are ESD-sensitive. Ensure the use of a grounded wrist strap or equivalent while working with ESD-sensitive devices. Transport, store, and handle ESD-sensitive devices in static-safe environments.

RF Safety

WARNING! To comply with FCC RF exposure compliance requirements, each individual antenna used for this product must be fixed mounted in indoor permanent structures, providing a separation distance greater than 50 cm or more from all persons during normal operation and must not be co-located with any other antenna for meeting RF exposure requirements.

The design of the antenna installation needs to be implemented in such a way so as to ensure RF radiation safety levels and non-environmental pollution during operation.

WARNING! Antenna gain should not exceed 12.5 dBi.

WARNING! The design of the antenna installation needs to be implemented in such a way so as to ensure RF radiation safety levels and non-environmental pollution during operation.

Compliance with RF safety requirements:

- Corning Optical Communications products have no inherent significant RF radiation.
- The RF level on the downlink is very low at the downlink ports. Therefore, there is no dangerous RF radiation when the antenna is not connected.

Power requirements for DC Inputs

WARNING! Only use a special DC supply cable with four connectors

WARNING! Always keep DC IN connectors connected during the product operation

WARNING! Disconnect all power from the equipment by means of an external circuit breaker before connecting or disconnecting the DC IN connectors.

DRAFT

Laser Safety

Fiber optic ports of the MA2K system elements emit invisible laser radiation at the 1310/1550 nm wavelength window.

The laser apertures /outputs are the green SC/APC Bulkhead adapters located on the front panel of the equipment.

The product is Class 1/Hazard level 1

External optical power is less than 10 mW, Internal optical power is less than 500 mW.

To avoid eye injury never look directly into the optical ports, patchcords or optical cables. Do not stare into beam or view directly with optical instruments. Always assume that optical outputs are on.

Only technicians familiar with fiber optic safety practices and procedures should perform optical fiber connections and disconnections of MA2K devices and the associated cables.

Corning CORE System MA2000 has been tested and certified as a Class 1 Laser product to IEC/EN 60825-1 (2007). It also meets the requirements for a Hazard Level 1 laser product to IEC/EN 60825-2: 2004 to the same degree.

Corning CORE System MA2000 system complies with 21 CFR 1040.10 and 1040.11 except for deviations pursuant to Laser Notice NO. 50 (2007).

Care of Fiber Optic Connectors

Do not remove the protective covers on the fiber optic connectors until a connection is ready to be made. Do not leave connectors uncovered when not connected.

The tip of the fiber optic connector should not come into contact with any object or dust.

Refer to the cleaning procedure for information on the cleaning of the fiber tip.

CAUTION! USE OF CONTROLS OR ADJUSTMENTS OR PERFORMANCE OF PROCEDURES OTHER THAN THOSE SPECIFIED HEREIN MAY RESULT IN HAZARDOUS RADIATION EXPOSURE

Regulatory Compliance Information

WARNINGS!

- This is **NOT** a **CONSUMER** device. It is designed for installation by **FCC LICENCEES** and **QUALIFIED INSTALLERS**. You **MUST** have an **FCC LICENSE** or express consent of an FCC Licensee to operate this device. Unauthorized use may result in significant forfeiture penalties, including penalties in excess of $100,000 for each continuing violation.
- **ANTENNAS**: Use only authorized and approved antennas, cables and/or coupling devices! The use of unapproved antennas, cables or coupling devices could cause damage and may be of violation of FCC regulations. The use of unapproved antennas, cables and/or coupling devices is illegal under FCC regulations and may subject the user to fines.

DRAFT

Standards and Certifications

Corning Optical Communications products have met the approvals of the following certifying organizations:

Company Certification

ISO 9001: 2000 and ISO 13485: 2003

Product Certification

US Radio Equipment and Systems

- FCC 47 CFR part 22 – for CELL Frequency Band
- FCC 47 CFR part 24 – for PCS Frequency Band
- FCC 47 CFR part 27 – for LTE and AWS Frequency Bands
- FCC CFR part 15 Subpart B
- FCC CFR part 90

Note: This equipment has been tested and found to comply with the limits for a Class A digital device, pursuant to Part 15 of the FCC Rules. These limits are designed to provide reasonable protection against harmful interference in a residential installation. This equipment generates, uses and can radiate radio frequency energy and, if not installed and used in accordance with the instructions, may cause harmful interference to radio or television reception, which can be determined by turning the equipment off and on, the user is encouraged to try to correct the interference by one or more of the following measures:

- Reorient or relocate the receiving antenna.

- Increase the separation between the equipment and receiver.

-Connect the equipment into an outlet on a circuit different from that to which the receiver is connected.

-Consult the dealer or an experienced radio/TV technician for help.

Warning!

Changes or modifications to this equipment not expressly approved by Corning Mobile Access could void the user's authority to operate the equipment.

Europe Radio Equipment and Systems

- EN 301502 – for GSM/EGSM Frequency Bands
- EN 300609 – for DCS Frequency Bands
- EN 301908 – for UMTS Frequency Band

EMC

EN 301 489

NTRL Safety UL 60950-1

Laser Safety IEC 60825-1, IEC 60825-2

TRA TRA type approval for UAE

Licensee Contact Information

Industrial Boosters may only be used by FCC licensees or those given express (individualized) consent of license. Corning Corning Optical Communications certifies all of the VARs listed as licensed installers for CMA. For the list of licensed VARs, please contact the CMA Tech Support Hotline: (US) 410-553-2086 or 800-787-1266.

DRAFT

About this User Manual

This user guide describes how to perform the physical installation of the Corning CORE System MA2000. The installation procedures of other units (e.g. RIU, MA850/MA860, LTE) relevant to the system are detailed in their user manuals (see 'Additional Relevant Documentation' below).

Additional Relevant Documents

The following documents are required if the corresponding units are included in your system.

Document Name
MA850/MA860 Installation and Configuration Guide
MobileAccess2000 700/800 Public Safety RHU Quick Start Guide
MobileAccess1000 / MobileAccess2000 User Manual Addendum for 700 MHz LTE Solution
RIU Installation and Configuration Guide
SC-450 Installation and Configuration Guide
NMS MA 410/430 Installation and Configuration Guide
MA1000 MA2000 Commissioning Guide
MA Software Version Update Tool

List of Acronyms

Acronym	Description
BDA	Bi-Directional Amplifier
BDAC	Bi-Directional Amplifier Conditioner
BTS	Base Transceiver Station
BTSC	Base Transceiver Station Conditioner
BU	Base Unit
DL	Downlink
LOS	Line of Sight
PS	Power Supply
RHU	Remote Hub Unit
RU	Remote Unit
RIU	Radio Interface Unit
SC-450	System Controller
UL	Uplink

DRAFT

Table of Contents

Warranties **2**

Hardware 2
Software Warranty 2
Returns 3
Limitations of Liabilities 3
Reporting Defects 3

Warnings and Admonishments **4**

RF Safety **4**

Compliance with RF safety requirements: 4

Power requirements for DC Inputs **4**

Laser Safety **5**

Care of Fiber Optic Connectors 5

Regulatory Compliance Information **5**

Standards and Certifications **6**

Company Certification 6
Product Certification 6

Licensee Contact Information **6**

About this User Manual **7**

Additional Relevant Documents 7

List of Acronyms **7**

Table of Contents **8**

1 Introduction **11**

1.1 Features and Capabilities 11
1.2 MA2000 System Architecture 12
1.2.1 Headend Equipment 13
1.2.2 Remote-End Equipment 13
1.3 Application Examples 14
1.4 System Monitoring and Management 16

2 MA2000 System Elements **17**

2.1 Enclosure Types 17
2.1.1 MA2000 MRC 17

DRAFT

2.1.2 MA2000 - Lite 20
2.2 MA2000 Remote Location Units 21
2.2.1 MA2000 RU 21
2.2.1.1 MA2000 RU Front Panel 22
2.2.1.2 MA2000 RU Rear Panel 23
2.2.2 MA1200 Add-on 23
2.2.2.1 MA1200 Front Panel 24
2.2.2.2 MA1200 Rear Panel 25
2.2.3 8 x 4 Combiner 26
2.2.3.1 MA 8x4 Combiner Front Panel 26
2.2.3.2 MA 8x4 Rear Panel 27
2.3 MA Base Unit 27
2.3.1 Base Unit Models 27
2.3.2 BU Panels 28
2.3.2.1 MA BU Front Panel 28
2.3.2.2 BU Rear Panel 29

3 Installation Guidelines 30

3.1 Site Considerations 30
3.2 Infrastructure Preparation 30
3.3 Environmental 30
3.4 Installation Requirements 30
3.5 Coaxial Cable Connections 31
3.5.1 General Cable Installation Procedures 31
3.5.2 Cable Routing 31
3.6 Fiber Optic Requirements 31
3.6.1 Authorized Optic Cables 31
3.6.2 Fiber Optic Rules 32
3.7 RF Rules 32
3.8 Coax Cable Lengths and Losses 33
3.9 Antenna Specifications and Guidelines 34
3.9.1 Authorized Antennas and Required Specifications 34
3.9.2 General Antenna Installation Guidelines 34
3.10 Grounding Requirement 34
3.11 Manual Handling 34
3.12 Power Consumption, Connections and Power Supplies 35
3.12.1 Power Safety Instructions 35
3.12.2 Power Consumption of Units 35
3.12.3 Circuit Breakers 35
3.12.4 Types of Power Supplies 35
3.13 Installation Conventions 36

4 System Installation 37

4.1 Pre-installation Instructions 37
4.1.1 Unpacking and Inspection 37
4.2 Communication Room Installation 37

DRAFT

4.2.1 Rack Installation General Instructions 37
4.2.2 MA2000 MRC Wall Mount Installation 41
4.2.3 MRC Grounding - Integrated PS Wall Mount Model 43
4.2.4 MRC 2000 Rack Mount Installation 44
4.2.5 Fiber Optic Connections 45
4.2.6 Power Connections 45
4.2.6.1 Integrated Power Supply model 45
4.2.7 Antenna Connections 46
4.3 MA2000-Lite Installation and Connections 46
4.3.1 Mounting MA2000-Lite 48
4.3.2 MA2000-Lite Connections 49

5 Upgrading and Configuration Examples 50

5.1 Common USA Configurations 50
5.1.1 iDEN/SMR with PCS Add-on 50
5.1.2 Cell/PCSH 52
5.1.2.1 Cell/PCSH and LTE 700 52
5.2 AWS Add-On 53
5.3 Public Safety 700/800 53
5.4 Typical International Configurations 54
5.4.1 Typical Asian Configuration: Cell/DCS+ UMTS 54
5.4.2 Typical European & Middle East Configuration: EGSM/DCS + UMTS Configuration 54

Appendix A : System Specifications 56

RF Parameters 56
RF Frequency Range 56
Low Band 57
High Band 58
RF Parameters MA1200 Add-on 59
System Specs 60
Fiber Optic Specifications 60
Absolute Maximum Rating 60
Temperature Specifications 60
Specifications of Units 61
MA 2000 MRC Remote Hub 61
MA 2000 Lite 61
MA 2000 Remote Unit 61
MA 1200 Add-On Specifications 61
Base unit Specifications 62

Appendix B: Ordering Information 63

DRAFT

1 Introduction

Corning CORE System MA2000 series provides enterprise level indoor coverage, of a wide range of multi-operator wireless services over a single broadband infrastructure. Front-end wireless RF services are routed, over optic fibers, to MA2000 series hubs that are securely located in the telecommunication closets at each remote location. These modular service aggregation platforms precisely combine multiple wireless service signals for simultaneous distribution over a common broadband infrastructure.

Two remote service hub models are available:

- **MA2000-Lite** – supports two remote units that are connected externally, where MA1200 Add-Ons and MA850/MA860 units can be integrated with the remote units.
- **MA2000 Cabinet (MRC)** – internally houses a total of five remote units and MA1200 add-on units with which MA850/MA860 can be integrated as an external assembly.

MA2000-Lite (left side) and MA2000 Cabinet (right side) | Figure 1-1

1.1 Features and Capabilities

- Multi-service platform that accommodates virtually any combination of wireless voice and data services eliminating the need for separate overlay networks
- Scalable and future-safe – services can be added and removed without affecting existing operators or end-users
- MA2000-Lite components can be migrated to MA2000 MRC for increased capacity
- All active components are located in the communication closet/room
- Carrier class operation – MA2000 advanced signal handling ensures optimal performance for all services within a multi-operator deployment
- Local and remote end-to-end monitoring and control through interface to SC-450 controller
- Conditioning and monitoring of input RF signals at the head-end through interface to MA-RIU

Note: Corning Optical Communications has made the transition to '2000M' products that support both single mode fiber and multimode fiber. The new Base Unit is designated by WBM (Wide Band M), and the new RUs (Remote Units) are indicated as '2000M' RUs, where the suffix "M" indicates that the product will support both single mode and multimode fiber usage. The new products have the same packaging and performance and are fully backward compatible. See 3.6 for details on multimode fiber use.

DRAFT

1.2 MA2000 System Architecture

The MA2000 solution comprises both headend and remote end equipment providing an end-to-end comprehensive system solution.

Note: Third-party equipment is sold separately (i.e. cabling, antennas).

At the head-end Corning CORE System elements provide interface to the wireless service provider's network, where the signals can be conditioned through an active interface and transported over optic fiber to the remote end.

At the remote end, the optical signal is reconverted to RF, amplified, filtered and distributed over the broadband antenna infrastructure.

For end-to-end control, controllers installed at the head-end provide direct interface to the MA elements and through them, control over the remote end elements.

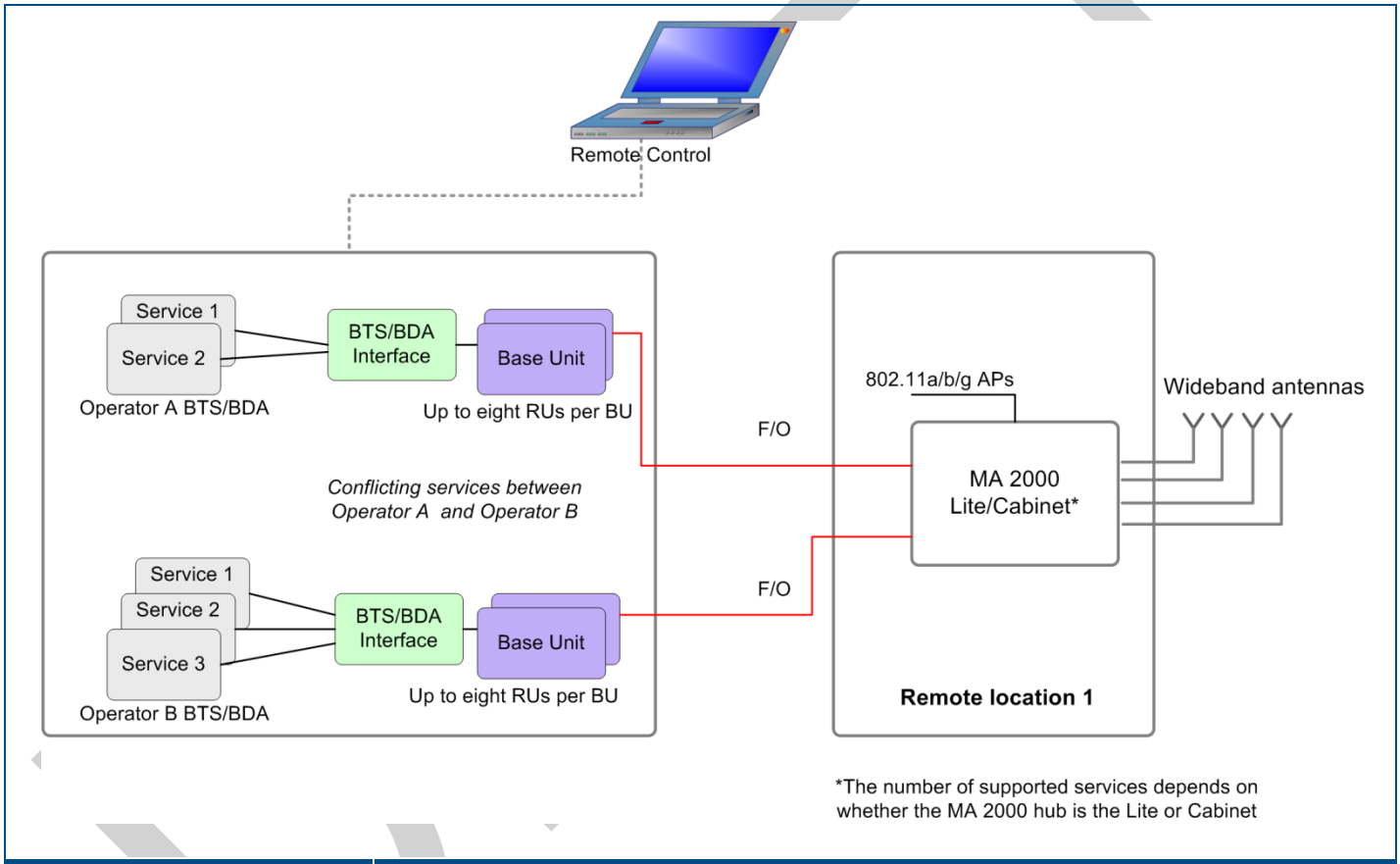

MA2000 System Architecture | Figure 1-2

Figure 1-2 shows a basic block diagram of the system operation. On the downlink, services from the BTS/BDA are transferred via interface to the Base Units (BUs). The interface, which may be passive (i.e. Interface Box) or active (RIU), is used to attenuate the RF signals to the required levels, converge them and distribute them to the BUs. The BUs are wideband – they are not service specific.

At the BUs, the RF signals are converted to optical signals and transmitted over the optic fiber to (service-specific) RUs at the remote locations. At the remote locations, the RUs supported by the hub (MRC or Lite) reconvert the optical signal to RF. The hub elements converge the voice services together with 802.11 a/b/g data services (if MA850/MA860 units are installed) and distribute them over the coax antenna infrastructure. The MA SC-450 (in installations with remote management) provides monitoring and control of all active system elements.

1.2.1 Headend Equipment

At the headend Corning CORE System elements provide interface to the wireless service provider's network, where the signals can be conditioned through an active interface and transported over optic fiber to the remote end.

- **Radio Interface Unit (RIU):** The RIU conditions the RF Downlink (DL) signals from an operator's signal source (BTS: base-transceiver stations or BDA: bi-directional amplifiers) located inside the building. The RIU then custom tunes incoming signals in order to ensure a constant level of RF before signals are passed to/from the Base Unit (BU). RF Uplink (UL) signals from subscribers' phones are received from the BU and transported back to the operator's signal source (BTS or BDA) and to the operator's macro network outdoors.
- **Base Unit (BU):** The BU converts RF Downlink (DL) signals received from the RIU into an optical signal. This optical signal is then transported over single or multi-mode fiber optic cabling (SMF/MMF) to/from the MA2000 TSX units, which are housed inside of IDF/Telco/IT closets at the remote-end locations, for distribution throughout the facility. Uplink (UL) signals from subscribers' phones are received from the antennas and sent back to the TSX units through the fiber connection to the head-end, where they are converted back from RF optical to RF electrical before being passed on to the RIU.
- **System Controller (SC-450):** The system controller enables centralized remote management and control of all Corning CORE System MA2000 elements.

1.2.2 Remote-End Equipment

The remote end elements interface to the DAS infrastructure. At the remote end, the optical signal is reconverted to RF, amplified, filtered and distributed over the broadband antenna infrastructure.

- **Remote Units (RUs)** – Pre-configured service specific modules that support up to two voice services and perform the optic to RF conversion on signals received from the BU at the remote locations. Signals are automatically filtered and amplified for transport over broadband coax cable to a passive antenna. Uplink (UL) signals from the antennas are then converted to optical signals before being transmitted back to the BU.
- **MA1200 Add-On** – Service specific module that provides support for an additional high band voice service. The AO is a single service module coupled with an RHU to deliver an additional, third service at a lower incremental cost. The AO receives RF signal from the RHU and amplifies it for transport across the broadband coax.
- **MA850/MA860** – Module that supports data services

DRAFT

1.3 Application Examples

Figure 1-3 shows an example of an MA2000 Cabinet based solution. Five services from two different operators are distributed, where services from Operator A conflict with those from Operator B.

The converted optical signal is routed from the BUs directly to the corresponding RUs in each Cabinet over optic fiber. Each BU supports connections to 8 RHUs. Additional BUs are required for connection to more RUs.

Services 1 and 2 are distributed through one of the RHUs supported in each Cabinet. Services 3, 4 and 5 are distributed through the second RU and the MA1200 unit connected to that RU.

MA850 and MA860 converge 802.11a/b/g data services with the voice services to be distributed through a common infrastructure of coax and wideband antennas.

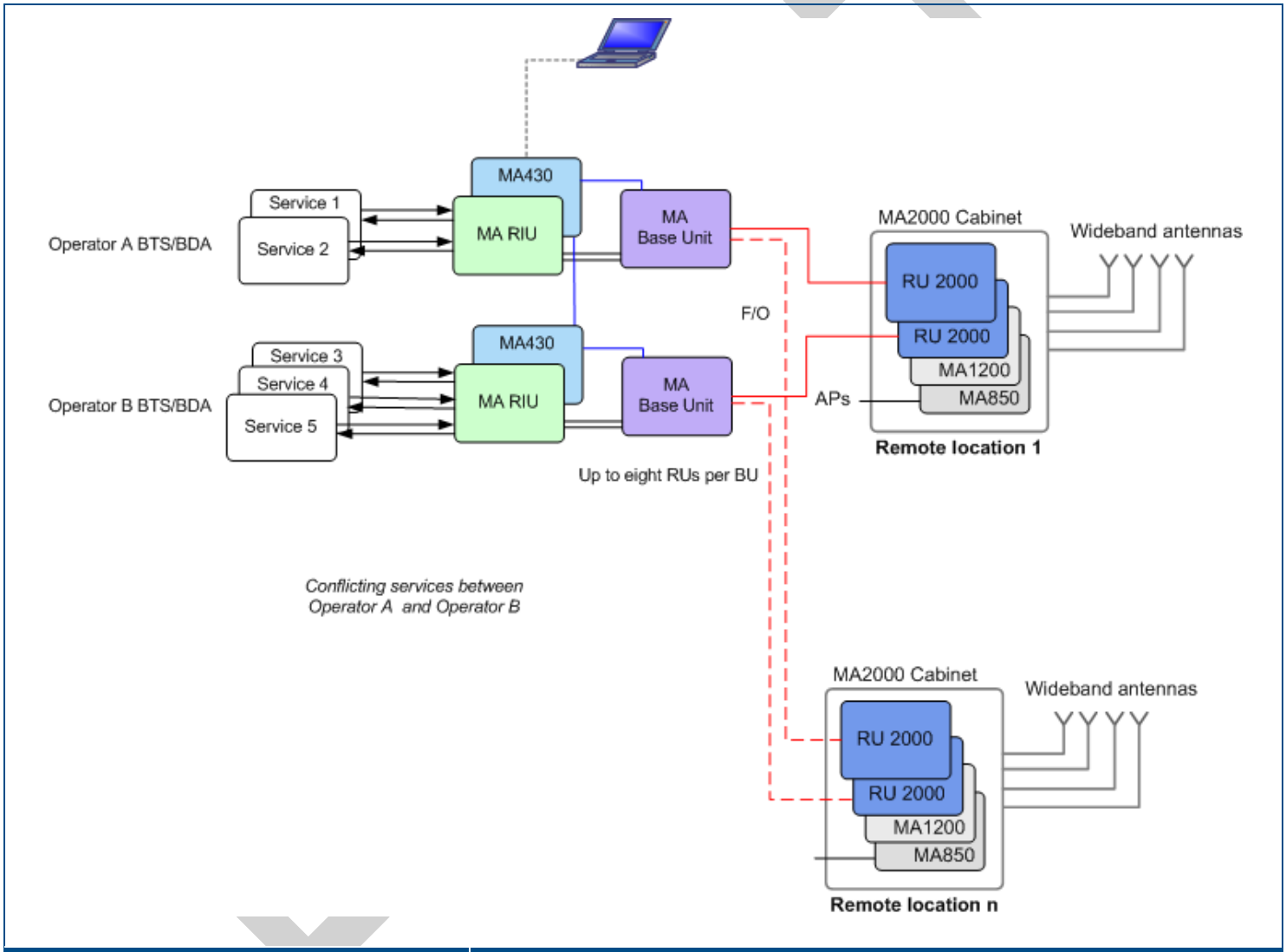

Example of MA2000 Cabinet Architecture | Figure 1-3

Figure 1-4 shows an example of an MA2000-Lite based solution. Four services from two different operators are distributed.

The converted optical signal is routed from the BUs directly to the corresponding RUs over optic fiber.

Services 1 and 2 are distributed through one of the RUs supported by MA2000-Lite. Services 3 and 4 are distributed through the second RU. The combiner and filter provides interface to the antennas.

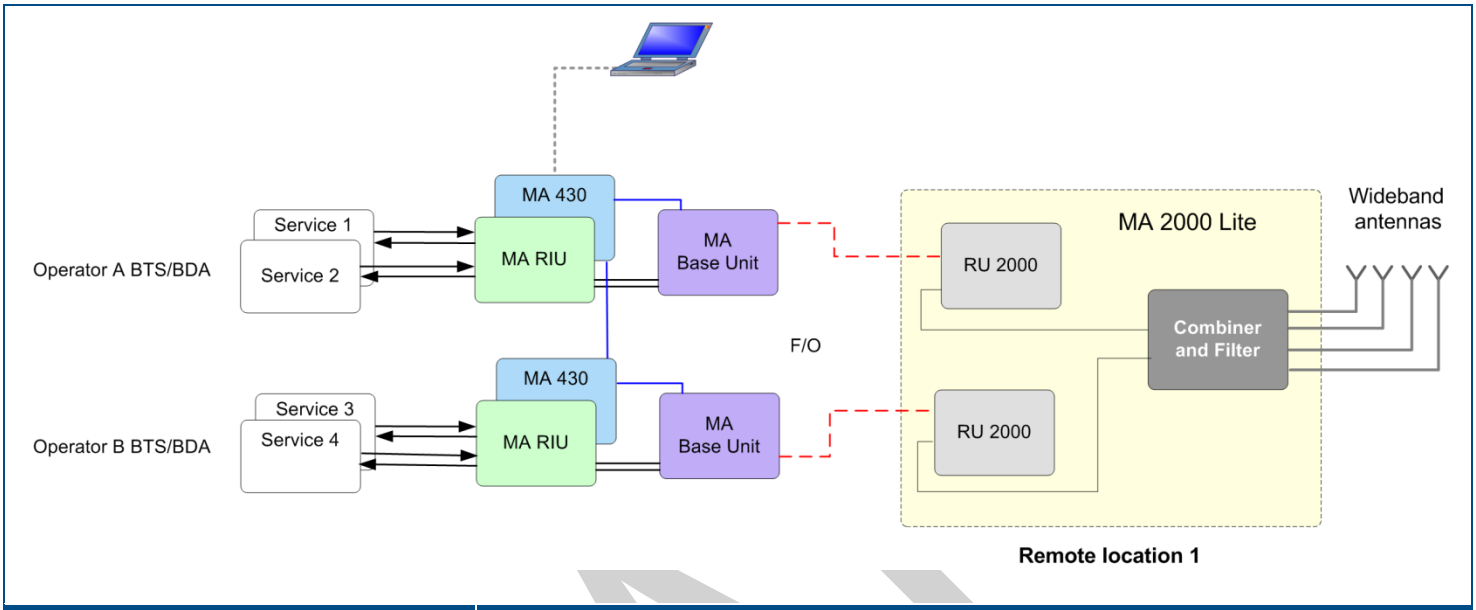

Example of MA2000-Lite Architecture | Figure 1-4

DRAFT

1.4 System Monitoring and Management

The MA2000 system elements are centrally managed via the CORE SC-450 Controller. The elements are displayed in a hierarchal corresponding to their physical connections in the topology tree of the Management GUI.

The following shows the Configuration tabs of the selected BU and RHU. Refer to the SC-450 Controller User Manual for information on how to configure and manage MA2000 elements.

Example of MA2000 BU and RHU Configuration Tabs | Figure 1-5

2 MA2000 System Elements

This chapter provides a full, detailed description of each of the system elements and their individual connections. The element descriptions are organized according to the following sections:

- Enclosures types – MRC (MA2000 Remote Cabinet) and Lite
- Remote Location Elements:
  - MA2000 Remote Units (RUs)
  - MA1200 Add-on
- Base Unit

Note: The following elements are fully described in their corresponding user guides: MA RIU, MA 850 /MA860, SC-450 Controller, MCT/NMS Management Application (described in MA410/MA430 Installation and Configuration Guide).

2.1 Enclosure Types

This section describes both types of enclosures (MRC/Lite) and their external connections.

2.1.1 MA2000 MRC

MA2000 MRC Closed Cabinet View | Figure 2-1

MA2000 Cabinet supports the following functions:

- Compactly houses up to five MA2000 RHU and MA1200 modules and the required filters

  Note: The number of modules that can be housed depends on the models, required filtering, etc.

- MA850/MA860 can be connected externally
- Converges all voice services and provides a single interface to the antennas through external connections
- Wall mounted or rack mounted

DRAFT

- Supplied in two models with differing power supply:
  - Integrated power supply – fed from an external AC power source. The MA2000 RHU an MA1200 Add-on modules are internally connected to the power supply. This model includes a battery connection as well.
  - External power supplies – power is routed to external connectors from which power is routed internally to each MA2000 RHU and MA1200 Add-On module

Open door views

Figure 2-2 shows an open MA2000 MRC cabinet, integrated power supply model, with four MA2000 RHU modules and four filters. (For clarity, the internal connections are demonstrated separately in Figure 2-3).

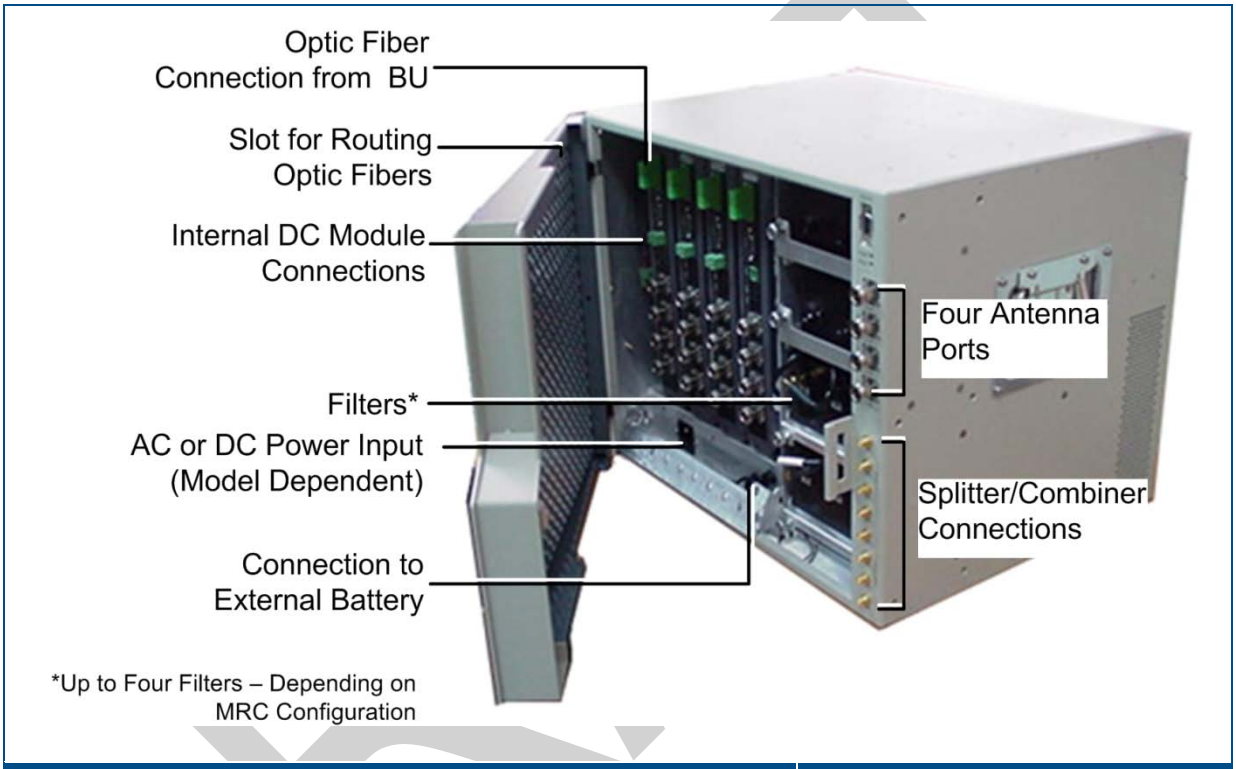

MA2000 MRC Open Cabinet View (without Internal Connections) | Figure 2-2

DRAFT

Figure 2-3 shows the MA2000 MRC with the cabling. The antenna ports of the individual modules are connected to the relevant filters and to the 8 x 4 Combiner. The PS connections of each module are also connected to cables that are internally routed to the integrated PS (a full detailed description of the connections is provided in chapter 5).

Note: The fiber optic connections are not displayed.

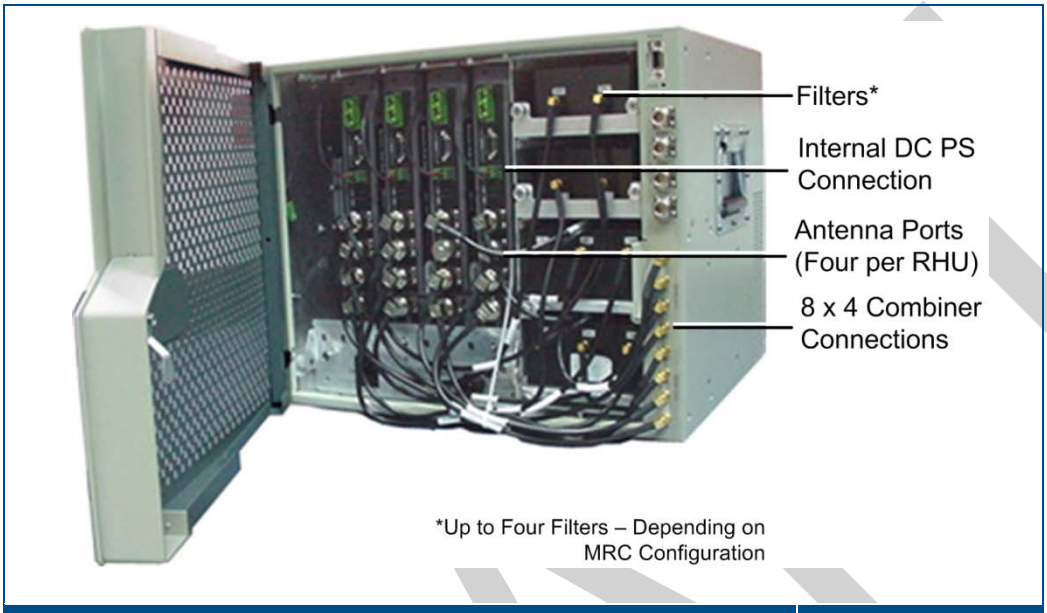

MA2000 MRC Open Cabinet View (without Internal Connections) | Figure 2-3

DRAFT

2.1.2 MA2000 - Lite

The MA2000-Lite is designed to support up to 8 voice services, in addition to 802.11 data services.

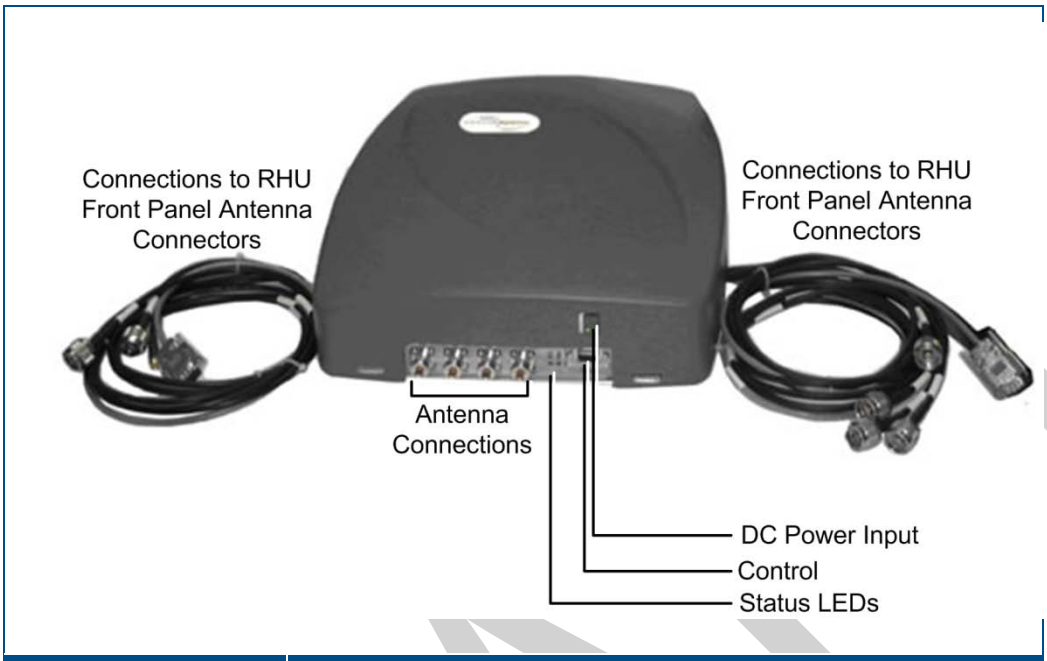

MA2000-Lite System | Figure 2-4

MA2000-Lite capabilities:

- External connections to two MA2000 RHUs (to which MA1200 Add-on units can be added)
- Internal filters and combiner (converges all services)
- Connection to MA850/MA860 for support of 802.11a/b/g data services
- External power supplies

The MA2000 enclosure contains two sets of cables, each providing connections to two MA2000 RUs.

Cable Connector	Description
Four N-type connectors	Coax connections to corresponding antennas
1x DB-9 connector	Connection to RU front panel RS232 connector

The following table describes the MA2000-Lite front panel connectors.

Connector	Description
Ant-1 to Ant-4 (N-type)	Coax connections to corresponding antennas
Control	Control connector for MA service personnel.
Power	20 to 48V DC power input

The following table describes the front panel LEDs.

LEDs	Description
Run	Module is operating properly.
Power	Green – required power is supplied.

DRAFT

2.2 MA2000 Remote Location Units

Service specific units located at each remote location convert the optical signals received from the Base Units to RF signals and route them to the coax antenna infrastructure.

Note: The voice services are converged by an 8x4 Combiner unit that is installed in the Cabinet enclosure and the Lite module.

The following types of service specific elements are available:

- Remote Units (RUs) – support two voice services
- MA1200 Add-On – adds an additional (third) voice service to the host RU to which it is connected.
- MA850/MA860 – converges data services from 802.11a/b/g APs and distributes them over the same coax and antenna infrastructure

Note: The MA850/MA860 is described in detail in the MA850/MA860 Configuration and Installation guide.

2.2.1 MA2000 RU

MA2000 RU is a service specific module that is either housed in the MA2000 Cabinet or connected externally to the MA2000-Lite module.

It provides the following functions:

- Performs the optic to RF (and vice versa) conversion at the remote locations
- Supports two services – high-band and low-band
- Interfaces to the optic fiber from the BU
- Add-On ready – MA1200 can be added to support an additional services
- Remote management - requires connection of host BU connection to an SC-450 controller

Note: MA2000 also supports management via MA410/MA430 controllers.

DRAFT

2.2.1.1 MA2000 RU Front Panel

The MA2000 RU front panel contains the fiber optic connections to the BU, four coax connections to the antennas, power connections and status indicators.

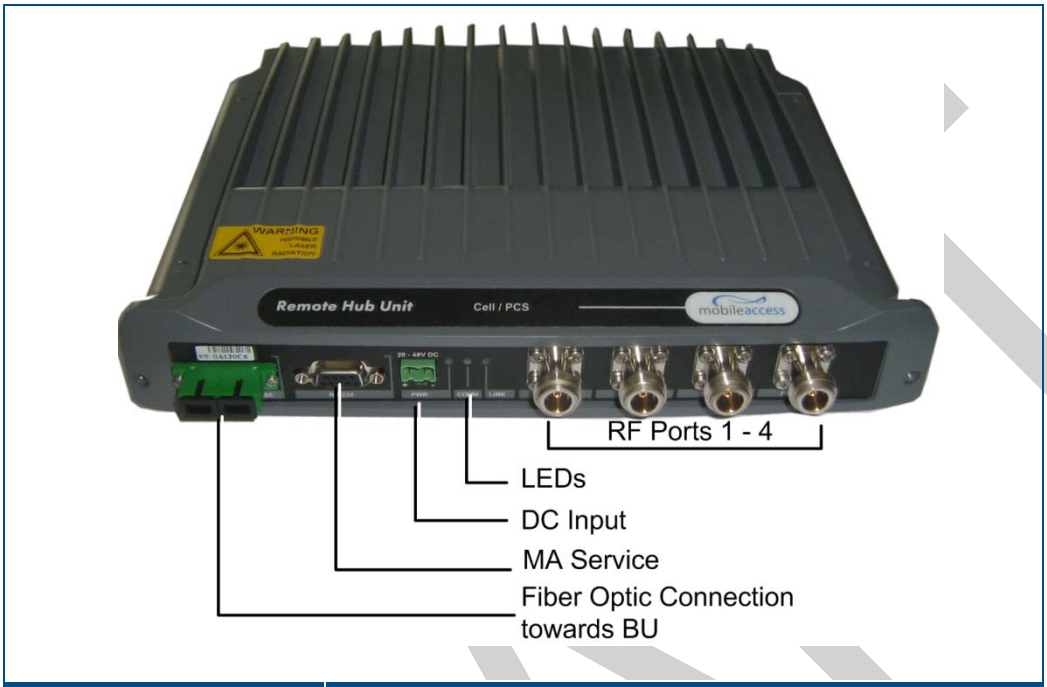

MA2000 RU Front Panel | Figure 2-5

LED	Description
COMM	Active communication detected
LINK	Optical link to BU detected
PWR	DC power connection. 20 to 48VDC

DRAFT

2.2.1.2 MA2000 RU Rear Panel

The MA2000 RU rear panel provides the control, RF interface and optic interface ports that enable connecting to an MA1200 Add-On unit.

MA2000 RHU Rear Panel	Figure 2-6

Add-on control:	Transmits the control signals from MA1200 Add-On module to the MA2000 RU module. The **Add-on Control** port is connected to the MA1200 Add-On **From** port.
DL, UL:	Transmit the RF signals to- and from- the MA1200 Add-On module. These ports are connected to the corresponding ports on the MA1200 rear panel: DL to DL, UL to UL.

2.2.2 MA1200 Add-on

The MA1200 Add-On module is used to provide support for an additional service to an MA 2000 RU. The host MA2000 RU and the MA1200 Add-On are interconnected and either housed in a MA2000 Cabinet or connected externally to a MA2000-Lite 'enclosure'.

MA1200 Add-On provides the following functions:

- Single service – either low-band or high-band
- Installed only as an addition to a MA2000 RU

Note: MA1200 Add-on does NOT interface directly to the fiber optic infrastructure, does not perform the optic to RF conversion and does not interface to the antennas. All these functions are provided by the host MA2000 RU unit.

DRAFT

2.2.2.1 MA1200 Front Panel

The MA1200 front panel contains the power connection and status LEDs. (The RS-232 connector is reserved for MA service personnel). The figure below shows the MA 1200 front view. It is followed by a description of the connections and LEDs.

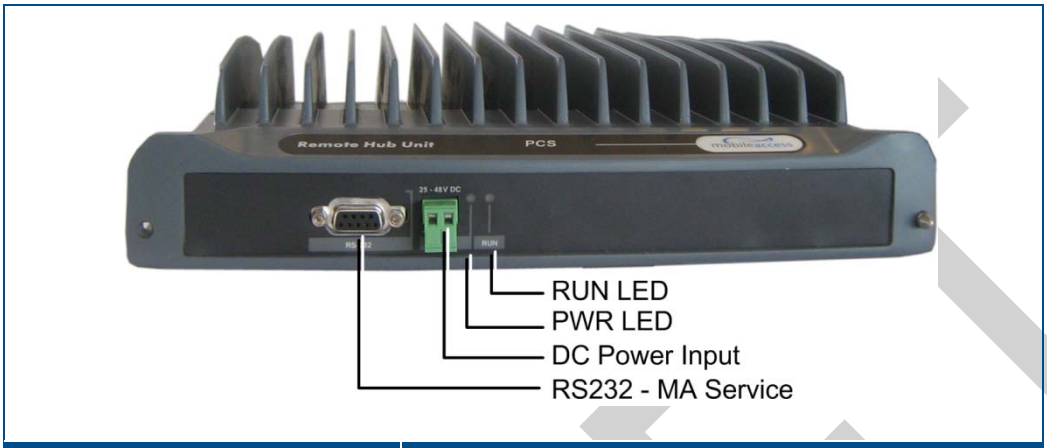

MA2000 1200 AO Front Panel | Figure 2-7

Table 2-1. MA1200 Front Panel Connect

LED	Description
RS232	Servicing connector to be used by MA service personnel for maintenance.
PWR	DC Power connection. 25 to 48VDC

Table 2-2. MA1200 Front Panel LEDs

LED	Description
RUN	When blinking, indicates that the RU is in normal operating mode.
PWR	Power ON

DRAFT

2.2.2.2 MA1200 Rear Panel

The MA1200 rear panel contains the control connectors and the RF connections to the MA2000 RU and MA850/MA860.

MA2000 1200 AO Rear Panel | Figure 2-8

Table 2-3. MA1200 Rear Panel Connectors

Add-on Control:	Transmits the control signals between the MA1200 module and the MA850/MA860 and MA2000 RU modules. **From –** receives control signals from the MA2000 RU. Connected to the MA2000 RU **Add-on Control** connector. **To** – feeds control signals to MA850/MA860 (in configurations that include MA850/MA860)
DL, UL:	Transmit the RF signals to- and from- the MA1200 add-on module. These ports are connected to the corresponding ports on the MA 2000 rear panel: DL to DL, UL to UL.
High:	Service RF output port. Connected to combiner/splitter to be combined with other services supported by the MA2000 system.

DRAFT

2.2.3 8 x 4 Combiner

Note: This unit is internal to the MA2000 system – both Cabinet and Lite models.

This unit is installed in the MA2000 system Cabinet and MA2000-Lite enclosures. It combines the RF outputs of the RUs in the corresponding system and provides a common interface to the coax antenna infrastructure.

The 8x4 Combiner provides the following capabilities:

- Supports up to eight RF voice service connections: four high-band and four low-band
- Supports four antenna interface ports (located externally on the MA2000-Lite)
- Provides low RF loss and high isolation for the input devices

2.2.3.1 MA 8x4 Combiner Front Panel

The front panel of the unit contains the four antenna interface ports, LEDs and control port.

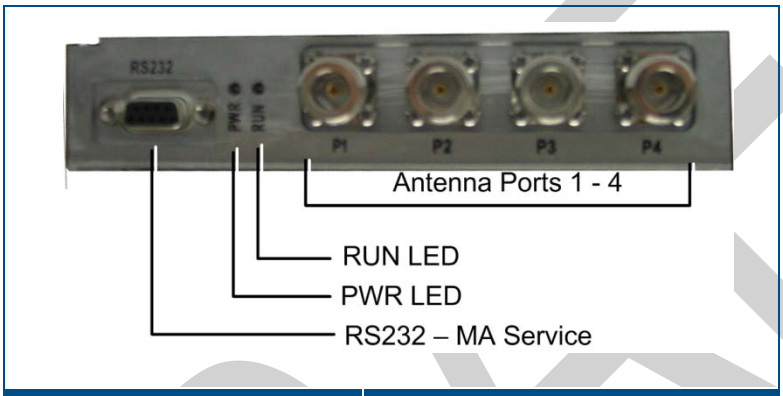

8 x 4 Combiner Front Panel | Figure 2-9

Table 2-4 describes the front panel connectors.

Table 2-4. 8 x 4 Front Panel Interfaces

Connector	Description
Ant-1 to Ant-4 (N-type)	Connections to corresponding antennas
Setup	Future Option

DRAFT

2.2.3.2 MA 8x4 Rear Panel

The rear panel of the unit contains four low-band and four high-band ports as well as the control port.

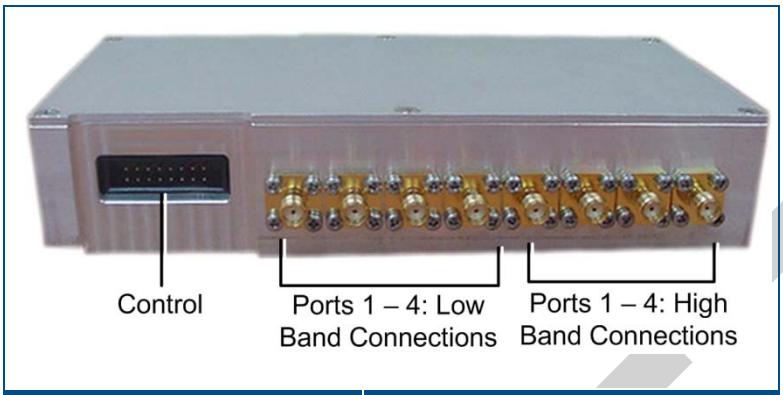

8 x 4 Combiner Rear Panel | Figure 2-10

Table 2-5 describes the 8 x 4 rear panel connectors.

Table 2-5. 8 x 4 Combiner Rear Panel Connectors

SMA Connectors	Description
Low Band	Four connectors (ports 1-4) for the low-band outputs of the corresponding remote unit. Refer to Chapter 5 for the connections relevant to each configuration.
High Band	Four connectors (ports 5-8) for the high-band outputs of the corresponding remote unit. Refer to Chapter 5 for the connections relevant to each configuration.
Control	Interfaces to the Digital card (that enables antenna monitoring)

2.3 MA Base Unit

The BU (Base Unit) is a wideband device that performs the conversion between the BTS/BDA (passive or active) interface RF signal and the remote units' optic signal.

Base Unit capabilities

- Supports all services distributed by Corning CORE Systems
- Fiber connection to up to 8 RUs
- Setup and monitoring through connection to the host SC-450 controller and NMS software application
- Dry contact alarms
- Front panel indicators providing status on optical link internal circuitry and signal level

2.3.1 Base Unit Models

Two models of MA BUs are available:

- B4U - four port unit comprising one optical module supporting optic connections to up to four RHUs
- B8U – eight port unit comprising two optical modules supporting optic connections to up to eight RHUs

Note: Each optical module is separately accessed and managed in the MCT and NMS management applications.

DRAFT

2.3.2 BU Panels

2.3.2.1 MA BU Front Panel

The front panel contains the optical connections and indicators. Each four-port element has a dedicated set of indicators (PWR, LSR and Link 1 to Link 4 or Link 5 to Link 8).

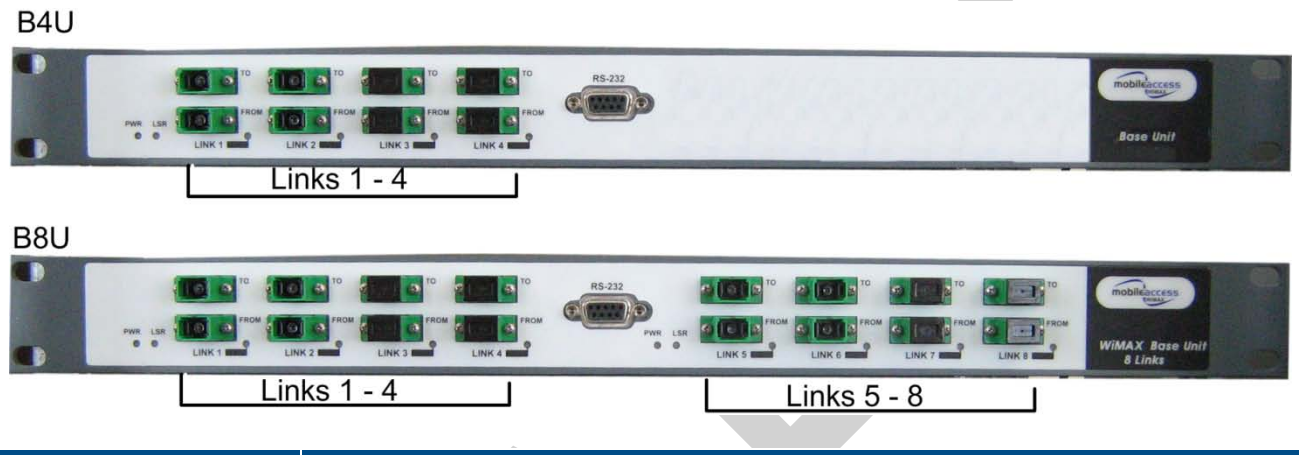

B4U and B8U Front Panels | Figure 2-11

Table 2-6. MA BU Front Panel In

LED	Description
PWR	Power input detected for the corresponding unit. 20 to 48VDC
LSR	ON - laser circuitry for the corresponding element (group of four ports) is functioning correctly.
Link 1-4, 5-8	ON - the optical link to/from the connected remote functions within the specifications in both directions. Blinking - optical power from remote is lower than required

DRAFT

2.3.2.2 BU Rear Panel

The BU rear panel contains the RF connections, Alarms, NMS and power connections.

Note: Figure 2-12 shows the rear panel of an 8-port BU. A 4-port BU contains a single UL and a single DL RF connector.

B8U Rear Panel | Figure 2-12

Table 2-7. MA BU Rear Panel Connections

Connector	Description
Uplink output	Uplink connectors to be connected on BTS/BDA side. For an 8-port BU, both UL connectors must be connected.
Downlink input	Downlink connectors to be connected on the BTS/BDA side. For an 8-port BU, both DL connectors must be connected.
Com Port RS485	Connection to SC-450 controller, rear panel RS485 port.
Alarms	Dry-contact connections to BTS/BDA (normally closed). Relevant only for system without SC-450 controller.
PWR	Power connection: 20 to 48VDC

DRAFT

3 Installation Guidelines

This following installation rules are based on the assumption that site survey and installation planning (including power requirements) have been completed.

3.1 Site Considerations

- The distance between the service antenna and the coverage area should correspond to LOS requirements for maximum coverage area.
- The maximum fiber path loss is 6 dB.
- The system delay of the optical system must be taken into consideration when there are neighboring BTS sites overlapping in coverage.

3.2 Infrastructure Preparation

The infrastructure preparation consists of two main phases:

A. **Floor Planning:** Planning the distribution of the antennas on each floor to provide the required coverage.

B. **Telecom Closet Planning:** Planning the layout of the devices and cables in the telecom closet or shaft. This includes the MA850/MA860, 802.11 Access Points, cabling and other voice service distribution systems that are relevant to the specific installation.

3.3 Environmental

Humidity has an adverse effect on the reliability of the equipment. It is recommended to install the equipment in locations having stable temperature and unrestricted air-flow.

The installation location for the system should be well ventilated. The equipment has been designed to operate at the temperature range and humidity level as stated in the product specifications with a relative humidity of max. 90% and temperatures ranging as follows:

Operating: 0 to 50°C (-4° to 185°F)

Storage: -20°C to 85°C (-4°F to 185°F)

3.4 Installation Requirements

- Mounting surface shall be capable of supporting the weight of the equipment.
- In order to avoid electromagnetic interference, a proper mounting location must be selected to minimize interference from electromagnetic sources such as large electrical equipment.
- Working space available for installation and maintenance for each mounting arrangement. Ensure unrestricted airflow.
- Ensure grounding connector is within reach of the ground wire.
- Ensure a power source is within reach of the power cord and the power source has sufficient capacity.
- Where appropriate, ensure unused RF connectors are terminated.
- Do not locate the equipment near large transformers or motors that may cause electromagnetic interference.
- Reduce signal loss in feeder cable by minimizing the length and number of RF connections.
- Ensure the equipment will be operated within the stated environment (refer to datasheet).
- Where appropriate, confirm available of suitably terminated grade of RF and optical fiber.
- Observe handling of all cables to prevent damage.

DRAFT

3.5 Coaxial Cable Connections

3.5.1 General Cable Installation Procedures

Note: The installer should be familiar with the ANSI/TIA/EIS-568 Cabling Standard guidelines.

Observe the general cable installation procedures that meet with the building codes in your area. The building code requires that all cabling be installed above ceiling level (where applicable). The length of cable from the risers to each antenna must be concealed above the ceiling.

The cable must be properly supported and maintained straight using velcro cable ties, cable trays and clamps or hangers every 10 feet (where practical above ceiling level). Where this is not practical, the following should be observed:

- The minimum bending radius of the supplied ½" coax cable should be 7".
- Cable that is kinked or has a bending radius smaller than 7" must be replaced.
- Cable runs that span less than two floors should be secured to suitably located mechanical structures.
- The cables should be supported only from the building structure.
- All cables shall be weather-resistant type.
- Cable length - determined by the system installation plan. When calculating the cable length, take into account excess cable slack so as not to limit the insertion paths.

3.5.2 Cable Routing

Ensure all cables, e.g. power cable, feeder cable, optic fiber, commissioning cable, connecting are properly routed and secured so that they are not damaged.

3.6 Fiber Optic Requirements

3.6.1 Authorized Optic Cables

- Either single mode or multimode fiber can be used with Corning CORE 2000M products, while MA2000 products can only be used with single mode fiber.
- Only Multimode fiber, 50/125 or 62.5/125um complying with ANSI/TIA/EIA-568-B series, EN50173-1 or ISO/IEC 11801 can be used. The fiber length can be up to 300 meters assuming the following qualifications:
- All fiber in a given length of fiber must be of the same core diameter.
- All Bulkhead adapters must be Single mode SC APC (Green) adapters.
- All terminations, cross connections or patches must be direct fusion splice or Corning Optical Communications specified patch cords according to the listed below:

900 microns patchcord for splicing, 2 Meters, 2 x SC APC	
Diamond p/n ENC/1045341 Beige boots, 62.5/125/900	MA# 500001057
Diamond p/n ENC/1045340 Black boots, 50/125/900	MA# 500001058

Zipcord patchcord, 4 x SC APC, 50/125/900/2000/4500 micron	
Diamond p/n ENC/1045342 Black/Brown boots, 1Meter	MA# 50000105
Diamond p/n ENC/1045343 Black/Brown boots, 3 Meter	MA# 500001060

Zipcord patchcord, 4 x SC APC, 62.5/125/900/2000/4500 micron

DRAFT

Diamond p/n ENC/1045344 Beige/Brown boots, 1 Meter	MA# 500001061
Diamond p/n ENC/1045345 Beige/Brown boots, 3 Meter	MA# 500001062

3.6.2 Fiber Optic Rules

ATTENTION!

Please also refer to the Laser Safety section in the document Preface.

- Use only 8-degree SC/APC connectors (green color).
- Use only fusion splice for connecting two fibers.
- Fiber optic cables require proper handling. Do not stretch, puncture, or crush the fiber cable(s) with staples, heavy equipment, doors, etc.
- Always maintain the minimum bending radius specified by the cable manufacturer. The minimum bend radius is usually 10 times the cable's outer diameter. In the case of single optical fiber that is not in a cable, the minimum bending radius to be observed is 30 mm.
- Pay special attention while connecting the SC APC connectors - ensure that you hear a “click”, indicating a secure connection
- Use minimum splicing/connectors to achieve minimum losses on the fibers.
- Use precaution while installing, bending, or connecting fiber optic cables.
- Use an optical power meter and OTDR for checking the fiber optic cables.
- Make sure the environment is clean while connecting/splicing fiber optic cables.
- All fiber optic connectors should be cleaned prior to connecting to the system
- Fiber connector protective caps should be installed on all non-terminated fibers and removed just before they are terminated.
- Check the fiber optic connections.
- Never look directly into the end of a fiber that may be carrying laser light. Laser light can be invisible and can damage your eyes.

3.7 RF Rules

- Use coax RG223, 50ohm, male-to-male N-type for RF connections from the BUs to the BTS/RBS and to the RIU.
- When using the Corning CORE System in an environment in which other indoor coverage systems are installed, it is recommended (where possible) that the antennas are placed at least two meters apart
- When bending coax cables, verify that the bending radius does not exceed the coax specifications.
- Use wideband antennas supporting a range of 800 MHz to 2500 MHz
- Use a VSWR meter (i.e. Site Master or equivalent) for checking coax cables, including the antennas. (<2). The VSWR must be measured prior to terminating the RUs in the remote communication rooms
- Terminate all unused RHU, AO and RIU ports with a 50 ohm load
- Make sure that the VSWR measured at the coax cable meets the product specification. The VSWR must be measured prior to terminating the RHU RF ports in the remote communication rooms.

DRAFT

3.8 Coax Cable Lengths and Losses

Use coax ½", 50ohm, male-to-male N-type, for connecting to RHU and antenna ports.

Note: The required distance between the antennas (installed in the ceiling) depends on the infrastructure and calculated path-loss. For example, if there is free space-loss between the antennas, a minimum distance of 100 ft is required; if there are partitions (loss) between the antennas, a distance of less than 100 ft between them is allowed.

Table 3-1. Typical Coax Cable Lengths and Losses

Coax Length	Coax Loss (900 MHz)	Connector Loss	Total Loss
30	0.7	1.5	2.2
40	0.9	1.5	2.4
50	1.1	1.5	2.6
60	1.3	1.5	2.8
70	1.5	1.5	3
80	1.7	1.5	3.2
90	1.9	1.5	3.4
100	2.1	1.5	3.6
110	2.3	1.5	3.8
120	2.5	1.5	4
130	2.7	1.5	4.2
140	2.9	1.5	4.4
150	3.1	1.5	4.6
160	3.3	1.5	4.8
170	3.5	1.5	5
180	3.7	1.5	5.2
190	3.9	1.5	5.4
200	4.1	1.5	5.6

DRAFT

3.9 Antenna Specifications and Guidelines

Determine the antenna installation configuration, according to the transmission and coverage requirements and the installation site conditions.

3.9.1 Authorized Antennas and Required Specifications

External antennas - No limitation on any vendor of available external antennas with respect to the following requirements:

- Omni Directional or Directional
- Supported frequency range: wideband antennas supporting a range of 700 MHz to 2500 MHz
- Gain: up to 12.5 dBi
- Impedance: 50 Ohm
- Types of couplers/splitters – depends on number of splits

3.9.2 General Antenna Installation Guidelines

- The wideband antenna should be installed at a convenient location, free of metallic obstruction (can also be installed in plenum spaces).
- Install the connected antenna at the designated height and tune it roughly toward the Service coverage area.
- Each individual antenna used for this transmitter must be installed to provide the separation distance as specified in the FCC grant from all persons during normal operation and must not be co-located with any other antenna for meeting RF exposure requirements

3.10 Grounding Requirement

Verify that the equipment has been well grounded (refer to the grounding lug located on the rear of the MRC cabinet). This includes antennas and all cables connected to the system. Ensure lightning protection for the antennas is properly grounded.

3.11 Manual Handling

During transportation and installation, take necessary handling precautions to avoid potential physical injury to the installation personnel and the equipment.

DRAFT

3.12 Power Consumption, Connections and Power Supplies

3.12.1 Power Safety Instructions

SAFETY WARNINGS

- When installing or selecting the power supplies:
- Be sure to disconnect all power sources before servicing.
- Calculate the required power according to the requirements of the specific installation and then determine the configuration of the power supplies. The required DC cables will then be determined by the selected PS configuration.
- Use only UL approved power supplies
- AC and DC power supply cables – only use the power cords supplied with the units
- Install external over-current protective devices for the system according to the requirements described in section 3.12.2.

3.12.2 Power Consumption of Units

Table 3-2. Power Requirements

Unit Type	Voltage Input	Typical Power Consumption	Maximum Current Consumption
MA2000 Remote Cabinet	20 to 48VDC	25W	1.25A
MA2000-Lite	20 to 48VDC	3W	0.15A
RU 2000	20 to 48VDC	25W	1.25A
Add-on Unit 1200	25 to 48VDC	50W	2.0A
RIU	20 to 48VDC	12W	0.6A
Base Unit	20 to 48VDC	14W	0.7A
MA410/MA430 Controller	20 to 48VDC	10W	0.5A
SC-450 Controller	36 to 60 VDC	10W	0.2A
MA850/MA860	20 to 48VDC	20W	1.0A

3.12.3 Circuit Breakers

Install fuse protections for the system according to the following criteria:

- The following system elements require external fuse protection: RIUs, BUs, and SC-450 Controllers.
- Referring to Table 3-2, calculate the required fuse protection.
- Example: a set of three elements consisting of a BU, RIU and SC-450 controller requires a 2A circuit breaker.

3.12.4 Types of Power Supplies

Corning Optical Communications supplies various power supplies that can be installed in a rack or mounted on a wall, depending on your configuration.

3.13 Installation Conventions

Some of the basic installation conventions are listed below for the MA 2000 system:

- Base Units – are usually concentrated in the same location, most often in the main communication room.
- Remote Cabinet/Lite – usually placed in the communication shaft or closet of a corresponding floor so they can be easily located. Each cabinet (or MA2000-Lite) can typically cover a floor of up to 30,000 sq ft.
- Fiber optic cable - bundled fibers are terminated into the Base Units in the main communication room. The fibers are then routed to each coverage locations where individual fibers terminate into splice boxes. The splice box couples the installed fiber into the remote units. Enough spare fibers should be installed to take into account future expansion of the system.

  For example, for three remote units, six fibers are required. However, to allow for future expansion, it is recommended to install additional optic fibers to be connected to additional RHUs.

  The following figure illustrates fiber optic routing to Remote Cabinets.

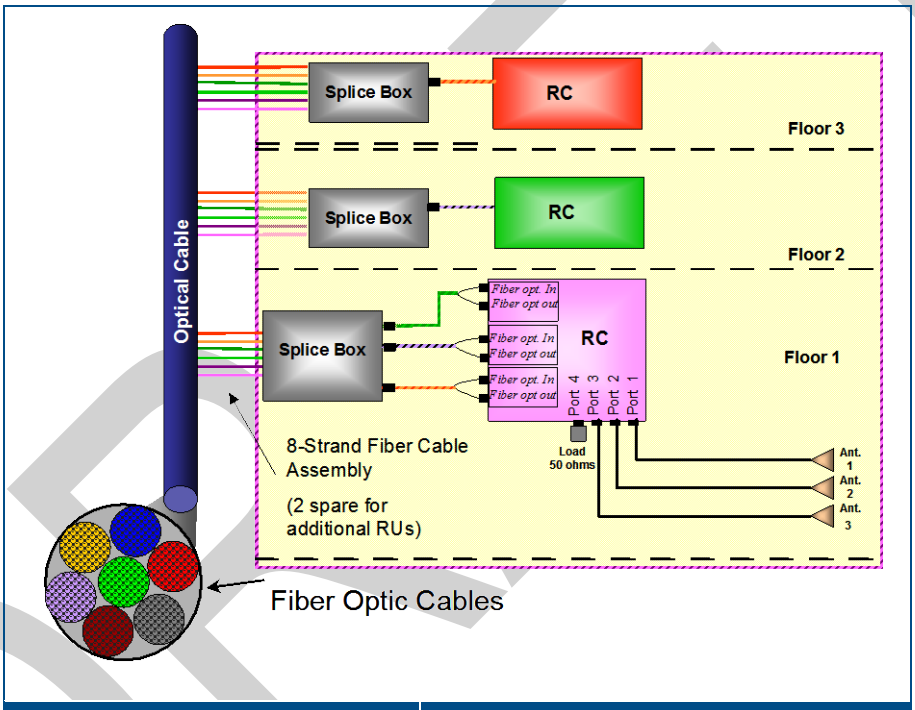

Illustration of Fiber Optic Routing | Figure 3-1

- **For remote power supply configuration -** cable bundles are routed from the main communication room and individual wire pairs are terminated into the power feed of individual units.

  By providing power from a single distribution point, maintenance can be reduced and UPS backup can be easily provided. The maximum distance from the source to the termination spot is 1000 feet using 18 gauge wires.

  In many locations local codes do not require power to be run through conduit if 100 watts or less is used. Please consult the regulations in your local jurisdiction prior to deploying remote power. When power cables require distances greater than 1000 feet 14 or 16 gauge wire may be used.
- **On each floor -** the antennas are connected to the Remote Cabinet or MA2000-Lite system using coax cables.

DRAFT

4 System Installation

This chapter describes how the communication room and cabinet are installed.

Note: Be sure to read the installation requirements (see Chapter 3) before proceeding with the actual connections.

4.1 Pre-installation Instructions

In order to describe the installation process clearly, it will be described as consisting of two logical parts:

A. **Telecommunications room** – installing the **RIU**s, **BUs**, **SC-450 controller**, and the required *passive equipment* in the telecommunication room close to the RF signal source. This installation may differ between single and multi-building topologies.

B. **Remote locations** – two types of installations:

- MRC Cabinet
- MA2000-Lite

The installations for two basic topologies are described in detail: for single building and for multi-building. By understanding the two generic installations you will be able to address any variations in system deployment.

Note: For installations that include the NMS - once the installation has been completed, it can be verified using the MCT application (NMS User's Guide) and the devices monitored using the NMS Manager (NMS User's Guide).

4.1.1 Unpacking and Inspection

This section provides instructions for opening the shipping boxes, verifying that all parts have been received, and verifying that no shipping damage has occurred.

Unpack and inspect the cartons according to the following procedure

1. Open the shipping carton and carefully unpack each unit from the protective packing material.
2. Check for signs of external damage. If there is any damage, call your Corning Optical Communications service representative.

4.2 Communication Room Installation

The Communication Room installation consists of the following basic steps:

1. Unpacking and inspecting the MA2000 units (see 4.1.1)
2. Mounting the RIUs, BUs and SC-450 controller in the mounting rack (see 4.2)
3 RF connections BTS/BDA connections.
4. RF connections to the Base Units.
5. Connecting the SC-450 control connections to the units
6. Connecting DC power to the units

4.2.1 Rack Installation General Instructions

Note: Usually, each operator installs the equipment that supports their services in a separate rack.

It is recommended to install the following Corning CORE system modules in a 19” rack in the communication room

- RIU Chassis 3U, RIU Lite 2U
- BU 1U
- MA410/MA430 controller 1U
- Fiber Optic patch panel and splice tray
- Power supply/supplies (Corning – 3U for each unit; units from other manufacturers may vary in size)

Verify that the rack height can support all the units to be installed, where you may also want to consider future expansions.

Figure 4-1 shows the recommended physical location of the Corning CORE elements in the rack in order to facilitate and simplify the cabling connections. The configuration is for a single operator. If the site is serviced by more than one operator, each operator often installs their equipment in a separate rack.

Note: Note that the CORE 430/SC-450 controller is at eye level to provide an easy view of the LED indicators and LCD display and easy access to the local and remote monitoring connections.

The following figure shows a typical installation for a two field design.

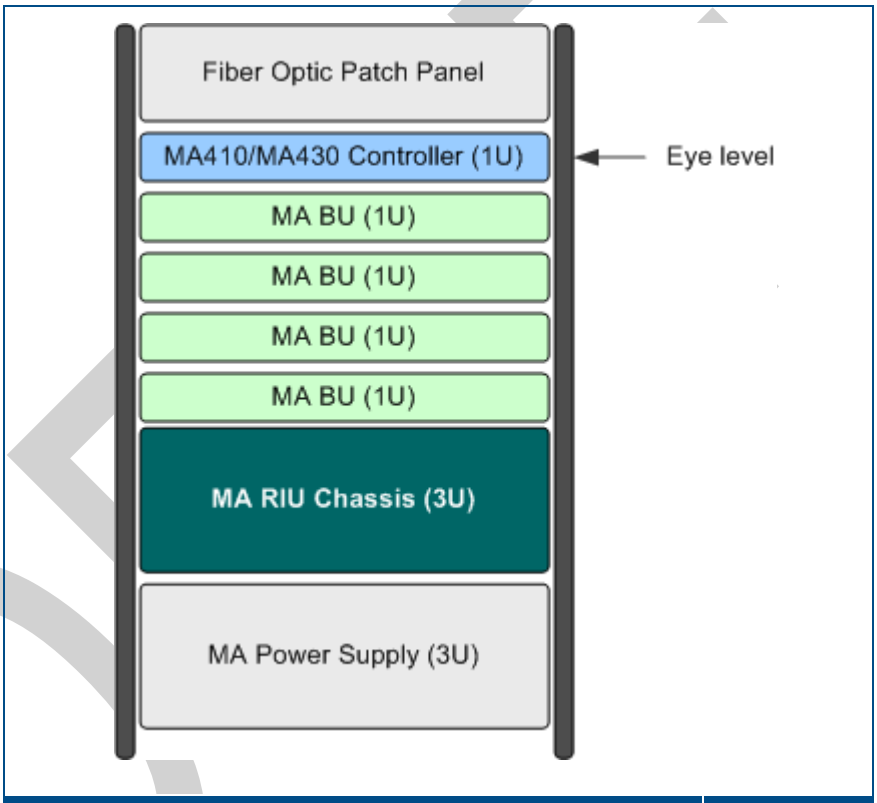

Recommended Order in the Communication Room Rack | Figure 4-1

Review the following guidelines to help ensure your safety and protect the equipment from damage during the installation.

- Only trained and qualified personnel should be allowed to install or replace this equipment.
- Verify that ambient temperature of the environment does not exceed 50°C (122°F)
- To maintain a low center of gravity, ensure that heavier equipment is installed near the bottom of the rack and load the rack from the bottom to the top.
- Ensure that adequate airflow and ventilation within the rack and around the installed components so that the safety of the equipment is not compromised. It is recommended to allow for at least about 2 cm of airspace between devices in the rack.
- Verify that the equipment is grounded as required – especially the supply connections. BU Connections

This section describes the installation for the Base Units with the RF signal supplied from an MA RIU Lite. If an RIU system is installed, refer to the RIU Installation and Configuration Guide for detailed instructions on the RIU connections.

Note: It is assumed that the patch panel cabinet (SC APC adaptors) for fiber optic cable connections is installed in the rack near the BUs.

To connect the BU

1. Connect fiber jumper between splice tray and patch panel cabinet.
2. Connect fiber jumpers between the corresponding BU optical ports and the patch panel.

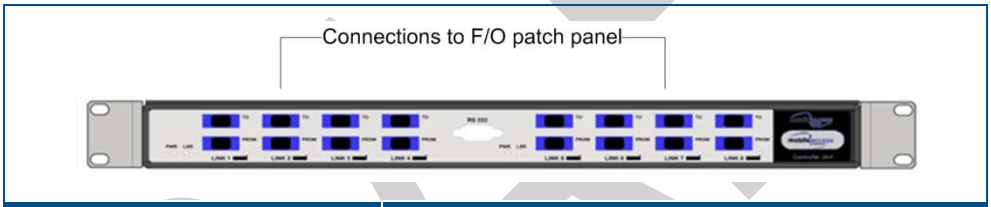

BU Front Panel Connections | Figure 4-2

3. Connect the BU rear panel **Uplink** and **Downlink** ports to the corresponding ports on the RIU rear panel (or to the RF ports from the passive interface if your system does not include an RIU).
4. Connect the BU rear panel **COM** to the MA430 rear panel RS485 connector.
5. Connect the **Power** connection on the BU rear panel.

DRAFT

Figure 4-3 shows the BU connections to an MA RIU Lite and SC-450 controller.

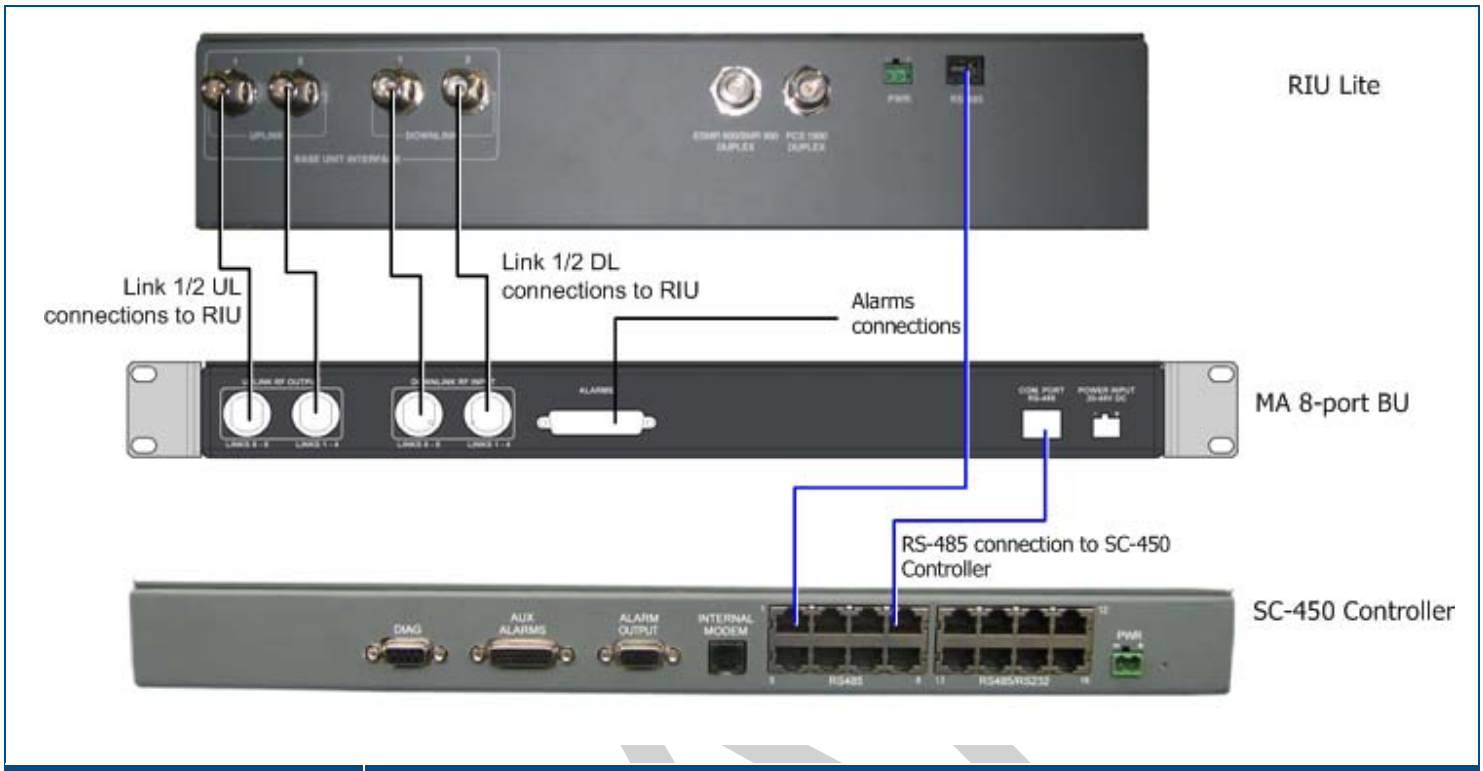

BU Rear Panel Connections	Figure 4-3

Mount and install the Remote Cabinet (RC) in one of the following configurations:

- Wallmount - on the wall in the communication room
- Rack mount – in a 19" rack in the *communication room* allocated to that area (sometimes referred to as a **secondary** communication room).

The procedure varies slightly according to the MA2000 Cabinet model:

- Integrated power supply
- External power supply

The following sections describe both procedures.

Note: For installations that include MA850/MA860 units, refer to the MA850/MA860 Installation and Configuration Guide for instructions on various installation options with the MA2000.

General Installation Instructions

The MA2000 Remote Cabinet units should be installed in a communication room that provides access to authorized personnel only. The units are maintenance free. In the event of failure, only authorized personnel should handle the units.

- Environmental Data - Maximum ambient operating temperature: 45° C
- Maximum ambient temperature in a rack: 45° C

4.2.2 MA2000 MRC Wall Mount Installation

The following figures show the MA2000 Cabinet dimensions for a wall mount installation.

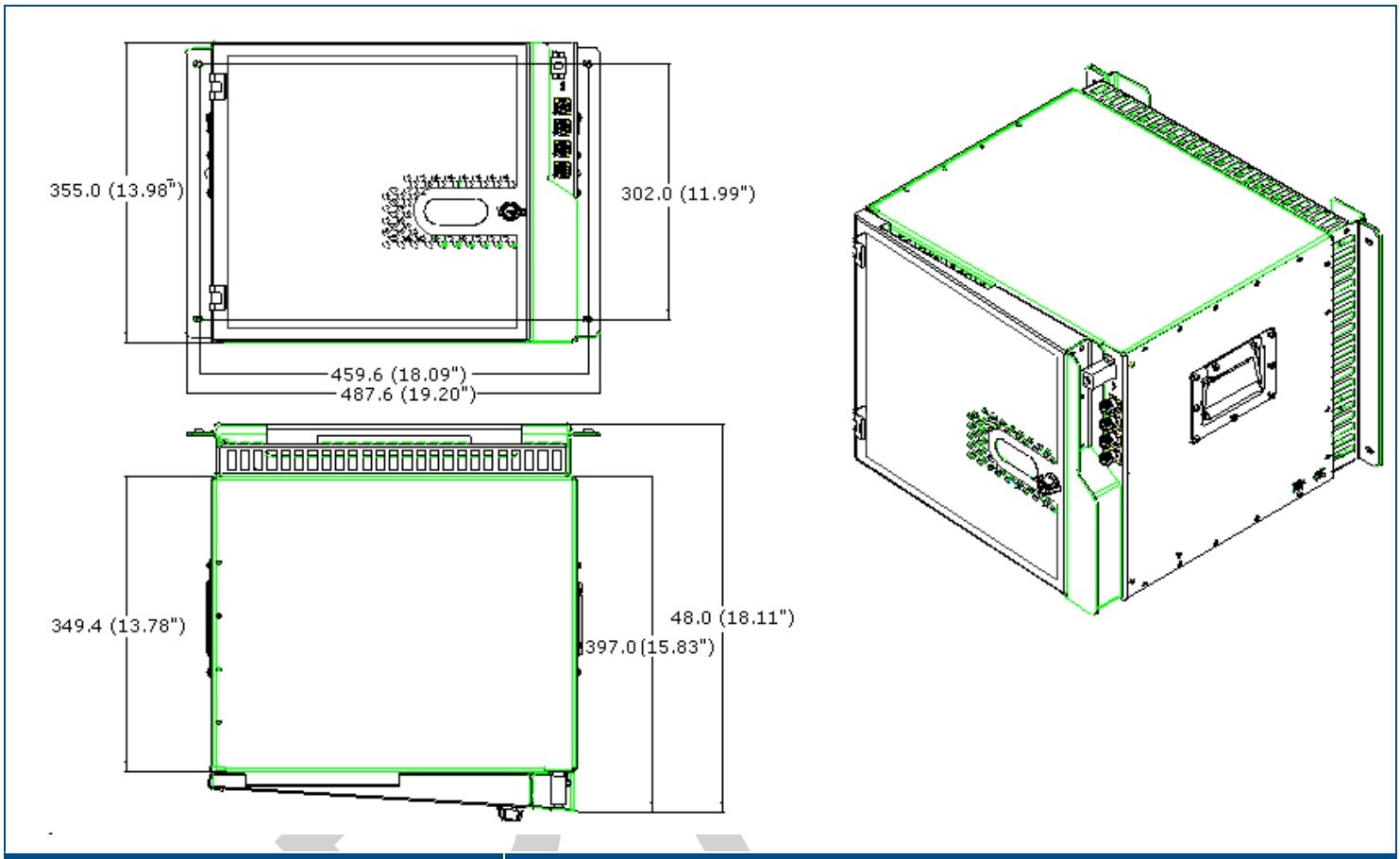

MA2000 Cabinet Wall Mount Dimensions	Figure 4-4

DRAFT

The wall installation MA2000 Remote Cabinet is supplied with a plate that is to be mounted on the wall and a bracket that is assembled on the rear of the MA2000 system.

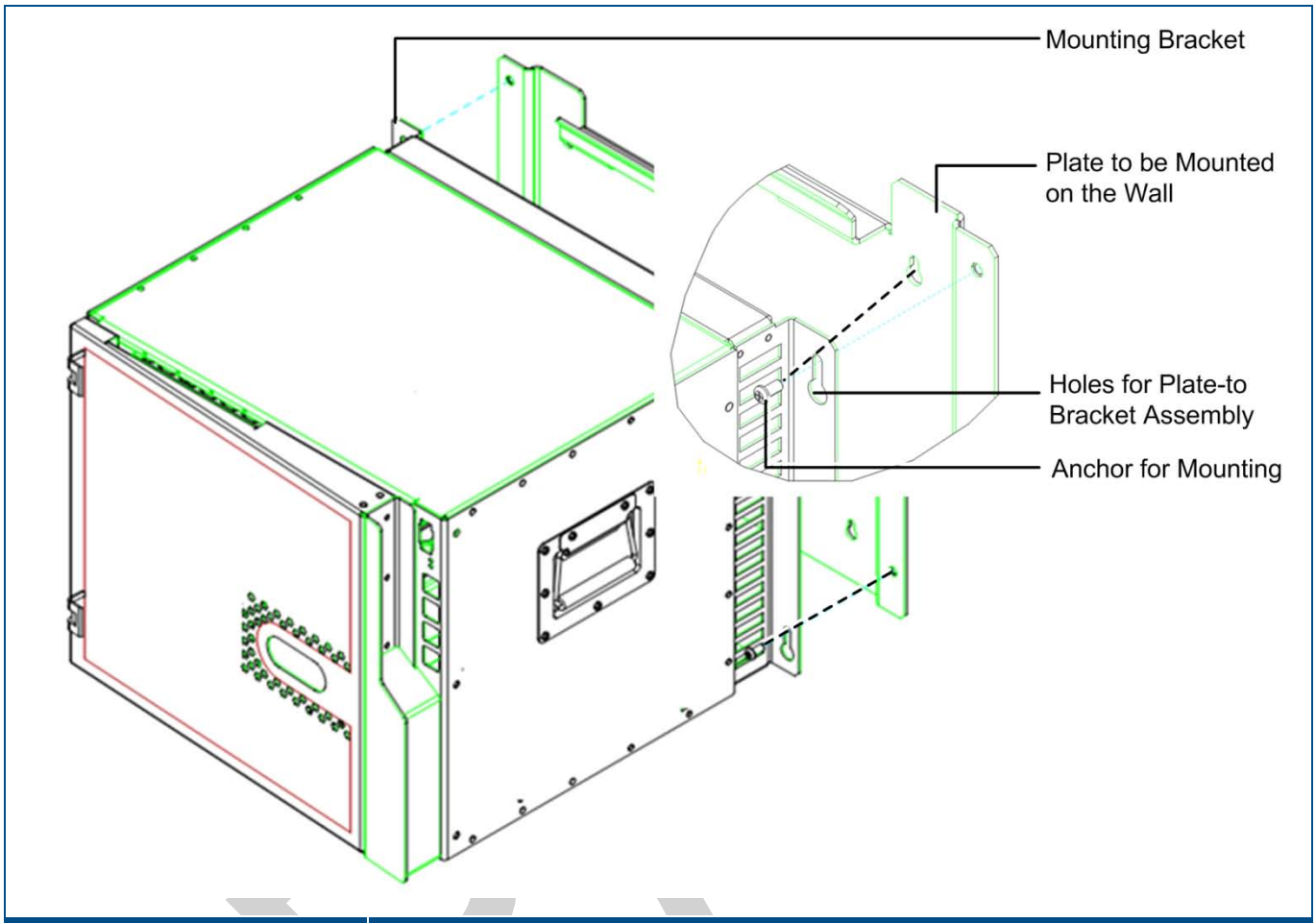

MA2000 System Wall Mount	Figure 4-5

Mount the MA2000 MRC on the wall as follows:

> ⚠ **ATTENTION!** The following instructions apply to an installation on a concrete wall. For any other type of wall, contact Corning Optical Communications.

Note: For installations that include an MA850/MA860 system, refer to the CORE 850/860 Installation and Configuration Guide.

---

1. For integrated power supply configurations only (for other configuration grounding is optional), connect the cabinet GND according to section 4.2.3.
2. Using the plate as a guide, drill four holes for concrete anchors. Insert four concrete anchors (McMaster-Carr catalogue number 92403A200, or equivalent).
3. Mount the Plate on the wall. Carefully and thoroughly fasten the anchors to the wall.
4. Assemble the Bracket onto the rear of the Remote Cabinet using the supplied screws.
5. Lift the MA2000 MRC and guide the rear ledge of the assembled bracket onto the plate bracket.
6. Using the four screws, secure the RC Bracket to the Plate on the wall.

Note: Tighten the screws only as much as needed to secure the Bracket to the Plate. One should be able to loosen the screws quickly if needed.

4.2.3 MRC Grounding - Integrated PS Wall Mount Model

Note: This procedure is only necessary for wall mount integrated power supply configuration (for other configurations this procedure is optional).

The Ground screw is located at the rear of the unit.

Grounding Located at the Rear of the Unit	Figure 4-6

4.2.4 MRC 2000 Rack Mount Installation

Note: The cabinet requires a clearance of 10 cm above the unit. If a heating source is installed beneath the MRC, a buffer must be placed between the cabinet and the surface.

The following figure provides the dimensions for the MA2000 Rack Model.

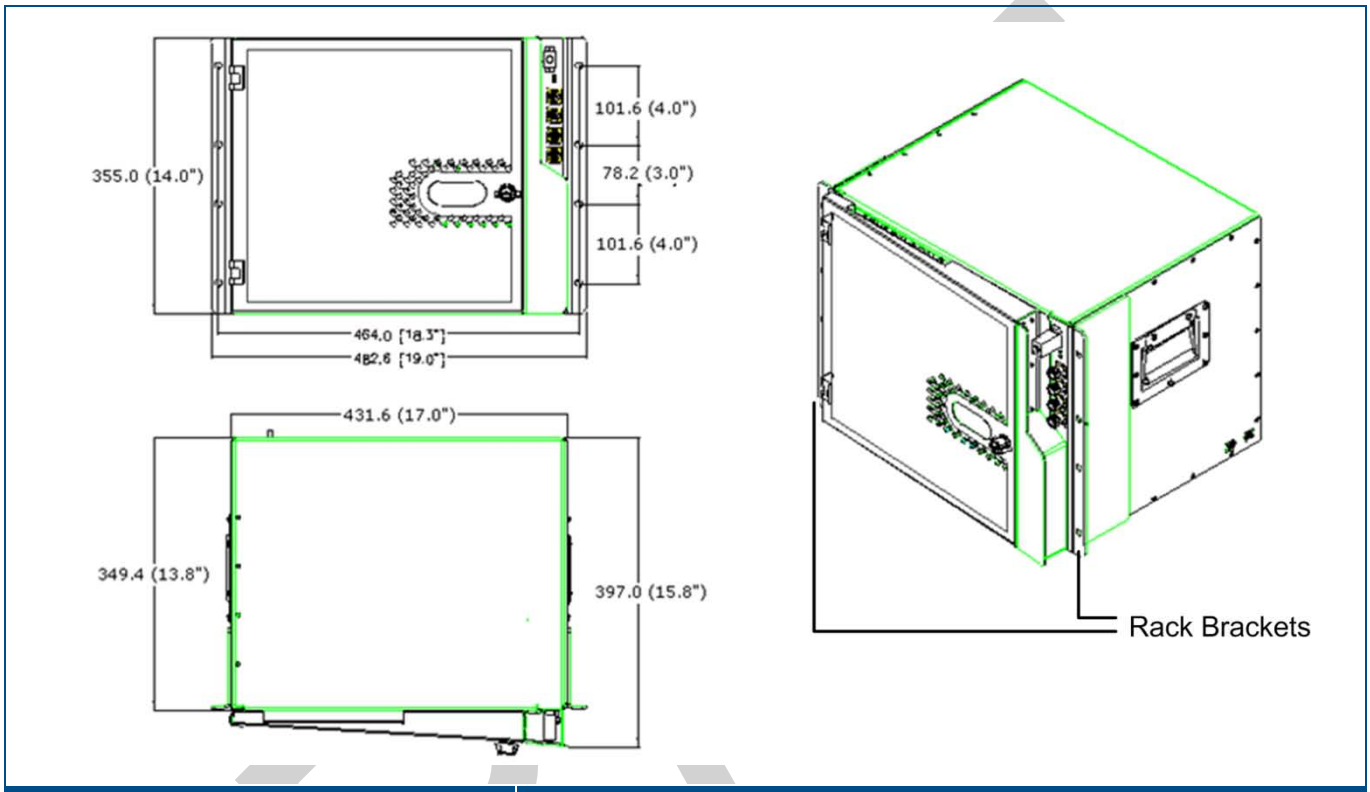

MA2000 Cabinet Rack Mount Assembly | Figure 4-7

The MA2000 MRC Rack Mount model is supplied with the required brackets already assembled to the sides of the cabinet as indicated in Figure 4-7. Simply, mount the MA2000 MRC in the rack and secure with the supplied screws.

4.2.5 Fiber Optic Connections

Note: Keep in mind the rules for handling and connecting F/O cables. The F/O cables will be connected to the associated BU in the communication room at a later phase.

1. Install splice box near Remote Cabinet.
2. Connect fiber optic cable to splice box and the SC APC pigtails to each RHU 2000 module.
3. For the downlink, connect the fiber optic cable pigtails from splice box coming from the BU port to the corresponding RU port (routing the optic fibers so they will fit through the top opening in the door.)
4. For the uplink, connect the fiber optic cable pigtails from splice box from the RU (routing the optic fibers so they will fit through the top opening in the door), to the uplink port that connects to the BU.

4.2.6 Power Connections

Note: The internal power connections and other connections should already be connected.

The power connections vary depending on whether the configuration is for an integrated PS or for external power supplies.

4.2.6.1 Integrated Power Supply model

- Connect the AC power connector to the connector on the internal plate as illustrated below. The power source may be: 230 VAC, 115 VAC (an AC/DC converter is built into the chassis).
- You may also connect a backup battery of 48V to the battery connector. This is an optional connection.

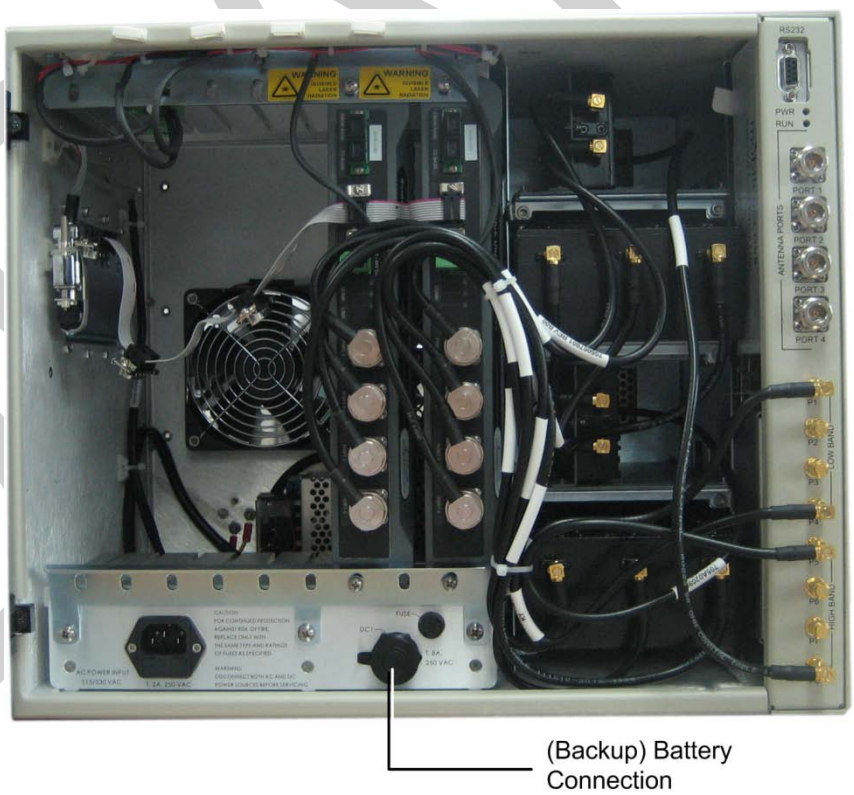

Partial View of System Illustrating Location of Power Connections | Figure 4-8

DRAFT

The external power source may be a central source with cables routed to each RU, or RU dedicated power supplies locally installed.

- PS = 24 VDC to 48 VDC.
- Connect each power connection to the appropriate connector on the remote cabinet.

4.2.7 Antenna Connections

- For systems without MA850/MA860 modules - connect the antenna connections to the N-type RF antenna ports (1-4) on the side of the MRC cabinet
- For systems with MA850/MA860 modules - refer to MA850/MA860 Installation Manual

4.3 MA2000-Lite Installation and Connections

MA2000-Lite is designed as a wall-mount installation – usually located in the communication shaft of the corresponding floor. The remote units are mounted externally to the MA2000-Lite device and their antenna outputs are connected to either side of the MA2000-Lite device. The combined outputs are then connected to the antennas in the covered area.

Figure 4-9 illustrates the MA2000-Lite coax connections to two RHUs.

MA2000-Lite System Coax Connections | Figure 4-9

Figure 4-9 shows the MA2000-Lite mechanical dimensions.

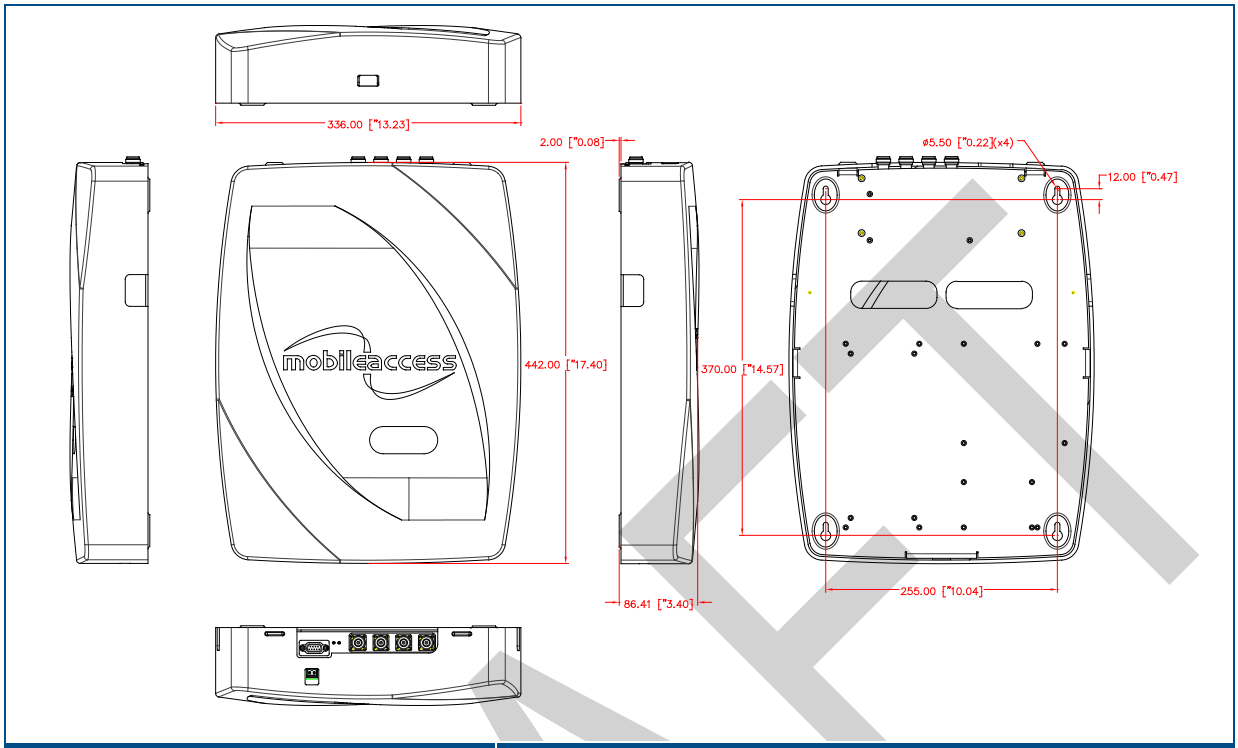

MA2000 - Lite Mechanical Dimensions	Figure 4-10

DRAFT

4.3.1 Mounting MA2000-Lite

To mount the MA2000-Lite

1. Remove the top cover (to access the mounting holes) by pulling it towards the rear bracket and lifting it over the front brackets. The tray and all its assembled components are displayed.

Note: The installed filters vary depending on the RHU models in the installation.

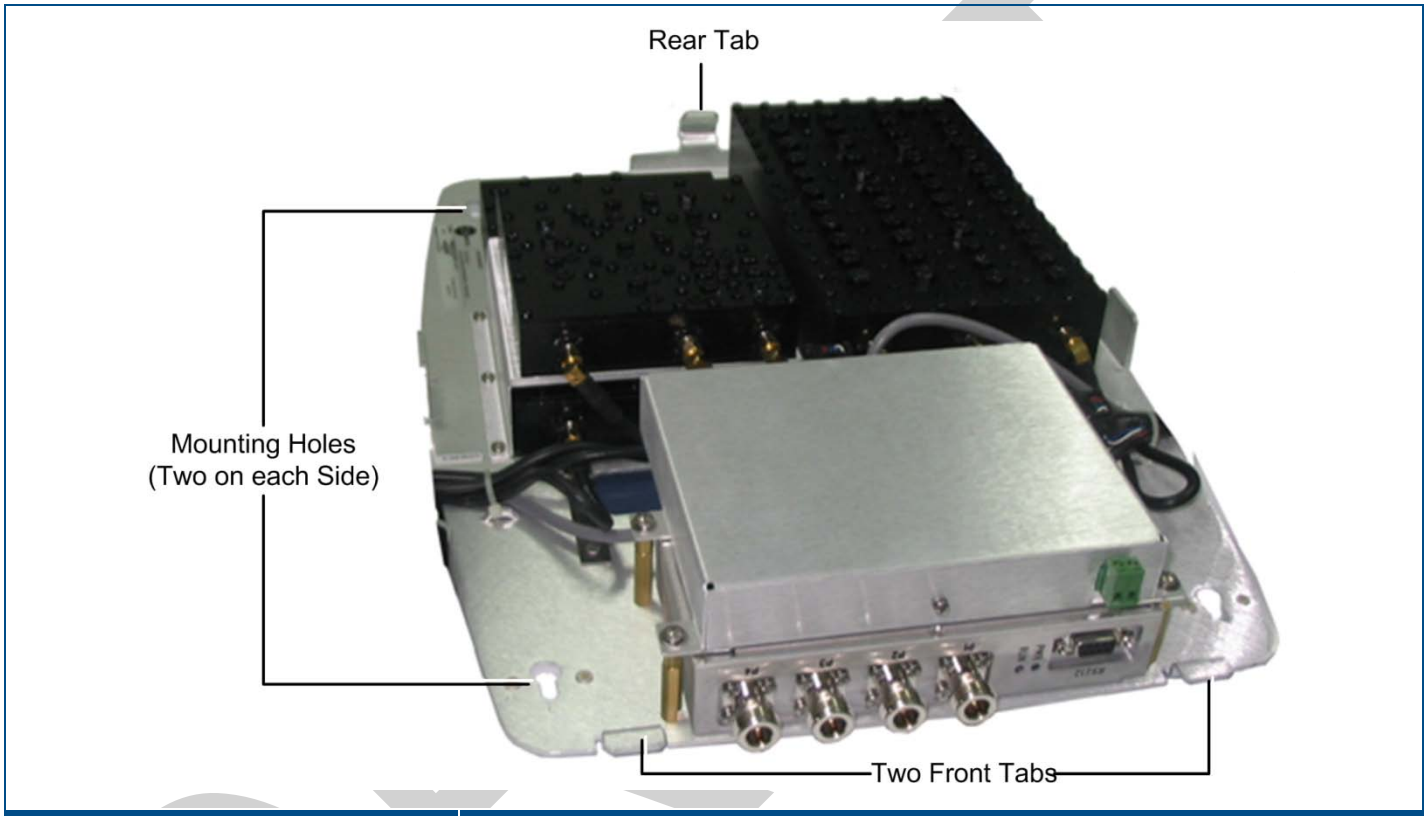

MA2000-Lite Prepared for Mounting | Figure 4-11

2. Depending on the tools you use:
   - Either measure the distance between the four wall mount holes and drill the required holes in the wall and insert the screws, or
   - Hold the tray up against the wall and simply drill the screws in the holes.
3. Mount each MA2000 RHU on the wall, on the corresponding side of the MA2000-Lite unit.
4. Re-assemble the MA2000-Lite cover by fitting it over the front tabs and pressing down gently at the rear.

4.3.2 MA2000-Lite Connections

This section describes the MA2000-Lite enclosure and its' external connections.

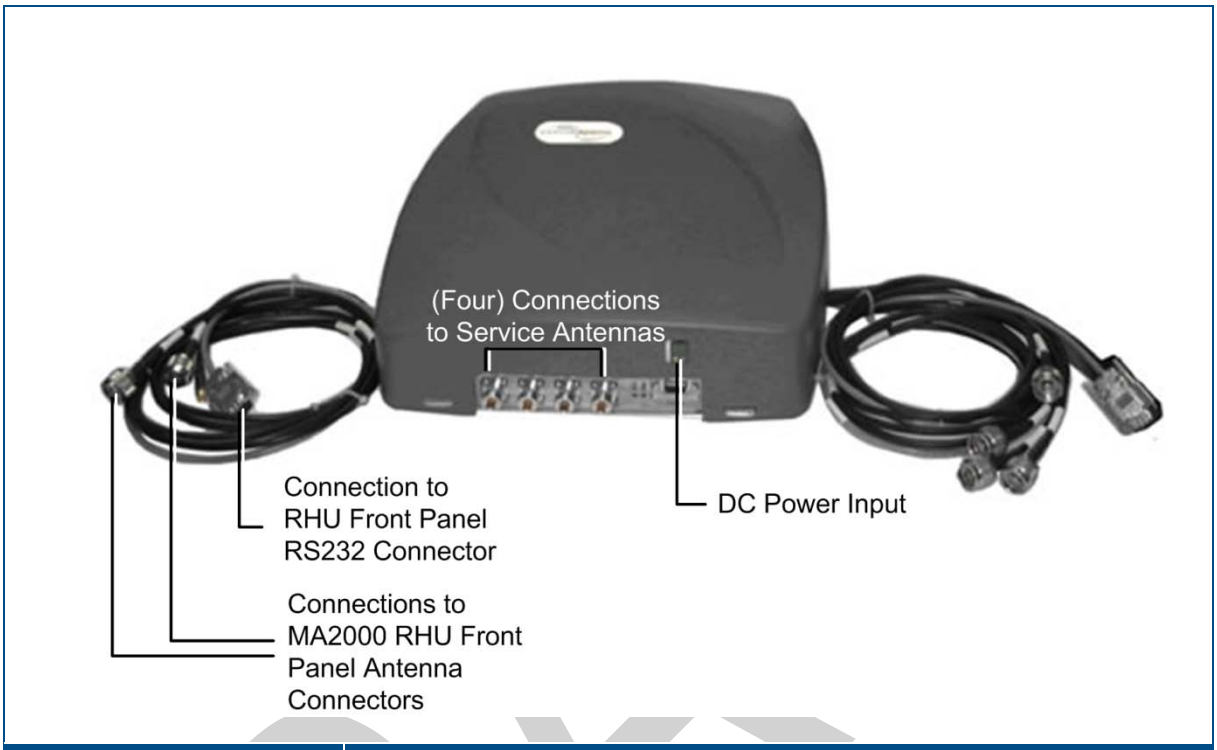

MA2000-Lite Connections | Figure 4-12

Note: It is not required to perform the following procedures in any particular order.

1. Connect each of the side cable N-type antenna connectors to the antenna connectors of the corresponding RU(s).
2. Connect the DC power.
3. Connect each of the side cable D-type connector to the front panel RS232 connectors of the corresponding RU.
4. Connect the antenna cables to the front panel antenna connectors.

DRAFT

5 Upgrading and Configuration Examples

Corning CORE MA2000 provides an entry level cost effective solution for current services and support for future services from the same or different operators. Support for additional bands is implemented by an RU module and RU specific hardware designed to prevent interference with other existing bands in the coverage area.

For support for additional services, connect the corresponding RU and hardware (Cavity Filter, Duplexer, etc.) to the **8x4 Module** and to the external coax infrastructure.

Note: It is required to order an Accessory Kit for each new unit to be added to the installation. The kit includes cables for connecting the MA2000 RU or MA1200 Add-On units to the required filters. Because of the differences in cable length requirements, the accessory kit differs for units designated to be installed in 2000 Cabinets and for those designated to be installed with MA2000-Lite systems.

This chapter provides several examples of the most common configurations and their connections. As systems are expanded for additional services, refer to the provided diagrams for a description of the connections between the Remote Units (referred to as RHU 2000), the interface devices (Filters, etc.) and the 4x8 Combiner.

5.1 Common USA Configurations

5.1.1 iDEN/SMR with PCS Add-on

iDEN and SMR coverage is implemented by one remote unit. This type of configuration was designed to meet Nextel's existing needs. MA1200 add-on module for PCS support can be integrated into the solution at any time in order to meet future needs.

Figure 5-1 describes the port connections between the remote units, add-on, and 8x4 Combiner.

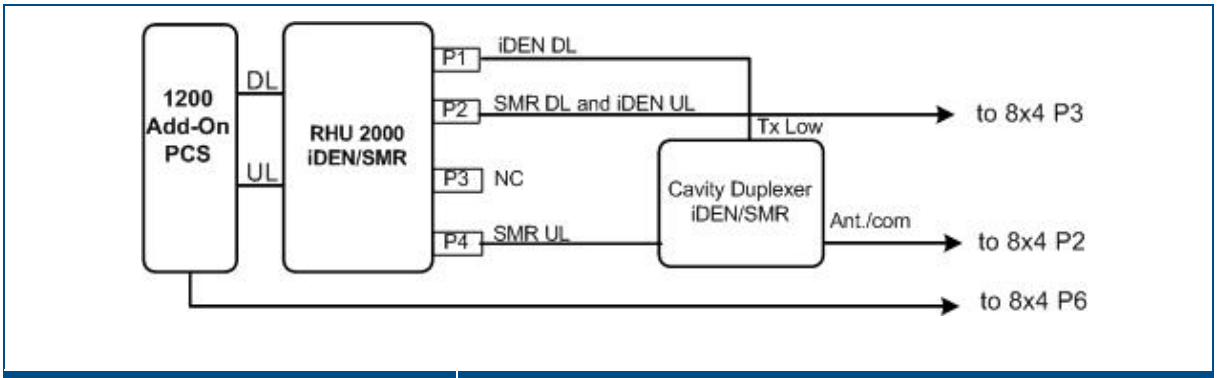

iDEN/SMR and PCS Connections | Figure 5-1

For infrastructures supporting a single Cell band and PCS, connect the RU according to Figure 5-2.

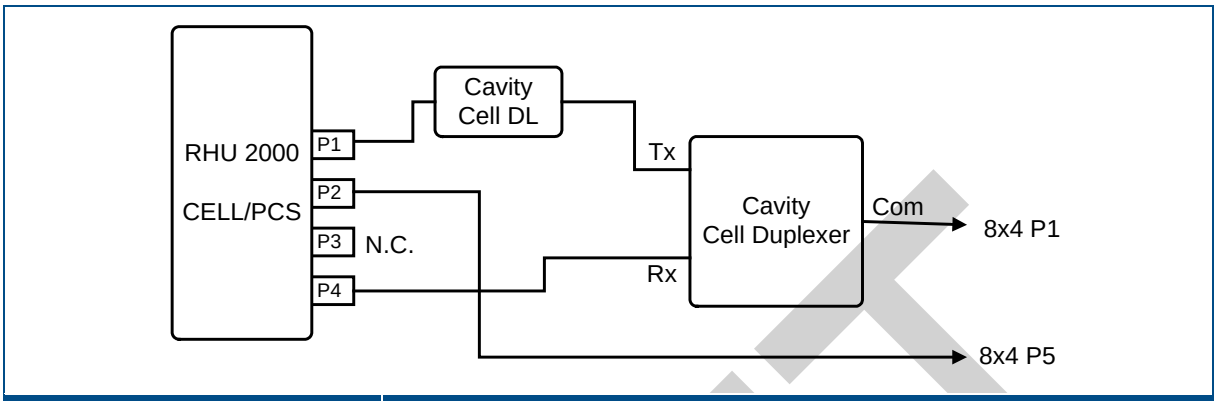

Single Cell/PCS Connections	Figure 5-2

For infrastructures supporting two Cell bands and a PCS band, connect the second Cell/PCS services RU according Figure 5-3..

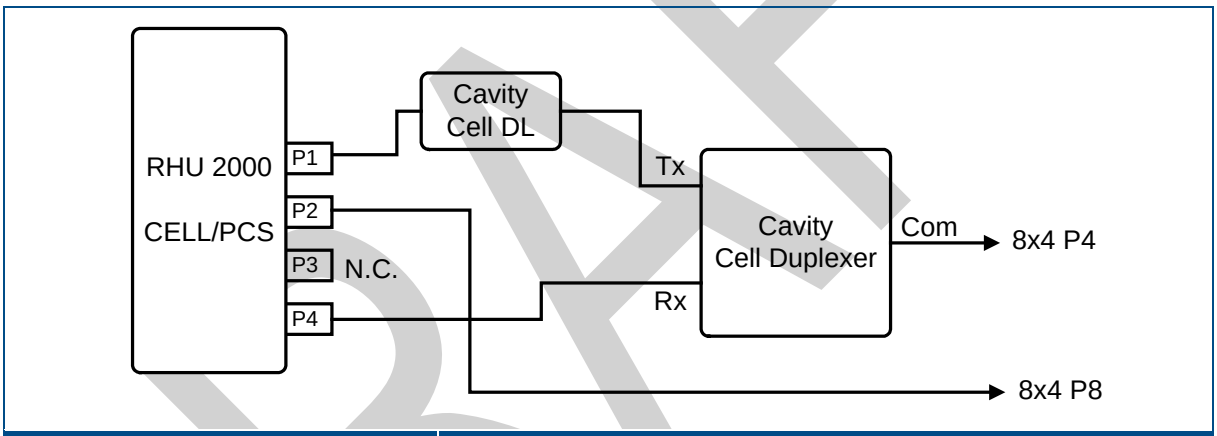

Additional Cell/PCS Connections	Figure 5-3

DRAFT

5.1.2 Cell/PCSH

Figure 5-4 provides a description of how to connect up to three Cell/PCSH services.

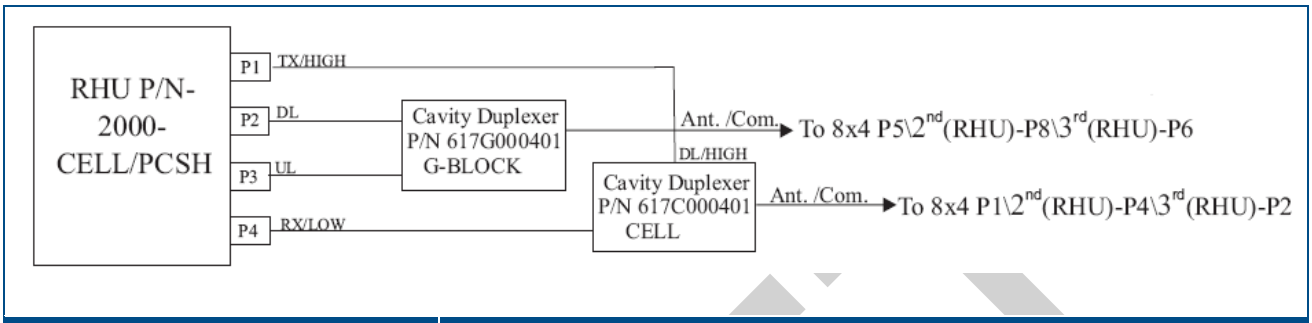

Single Cell/PCSH Connections | Figure 5-4

Note: In cases requiring more than one RHU, connect the additional units according to 2nd and 3rd RHU configuration.

5.1.2.1 Cell/PCSH and LTE 700

Figure 5-5 shows the connections for a configuration consisting of a 700 LTE Add-On unit with external filter and Cell/PCSH RHU.

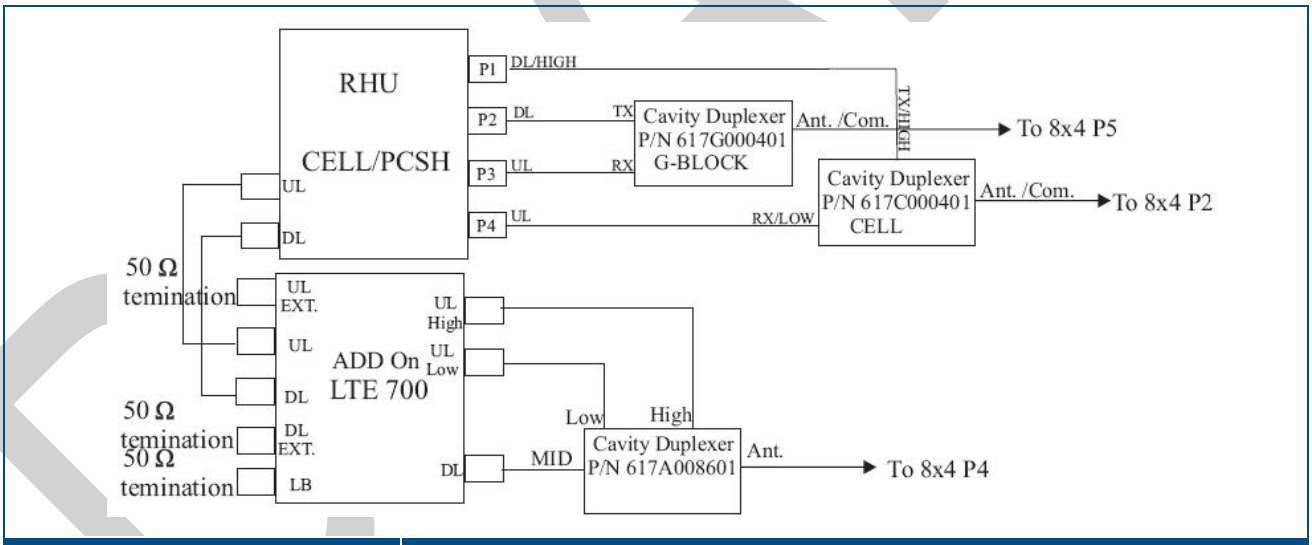

Single Cell/PCSH Connections | Figure 5-5

5.2 AWS Add-On

Figure 5-6 shows the duplexer and 8x4 combiner connections for configurations with an AWS Add-On unit.

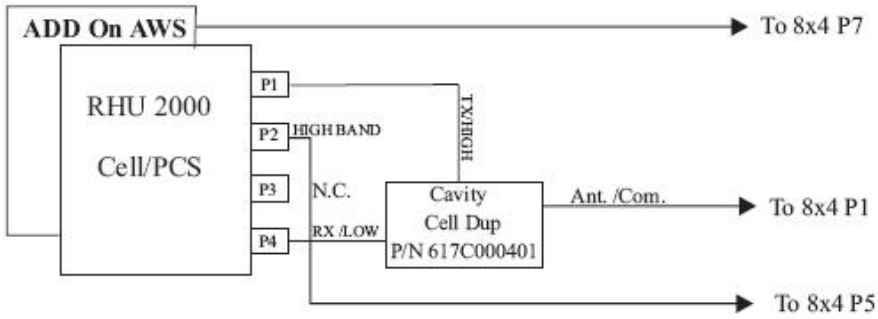

AWS AO Connections | Figure 5-6

5.3 Public Safety 700/800

Note: Both the MA2000 Public Safety 700/800 RHU and the corresponding filter unit are installed EXTERNALLY on the Cabinet. For information on the installing and configuring the MA2000 Public Safety 700/800 RHU refer to the MA2000 700/800 Public Safety RHU Quick Installation Sheet provided with the unit.

The installation connections are as follows.

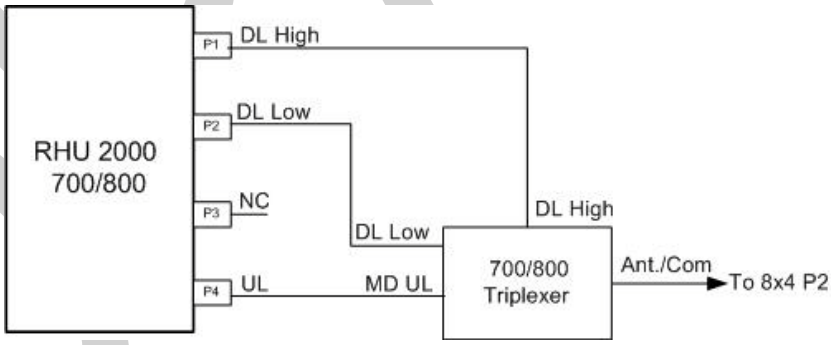

700/800 RHU Configuration | Figure 5-7

DRAFT

5.4 Typical International Configurations

MA2000-Lite supports Cell/DCS and DCS. UMTS support can be added through MA1200 Add-On.

5.4.1 Typical Asian Configuration: Cell/DCS+ UMTS

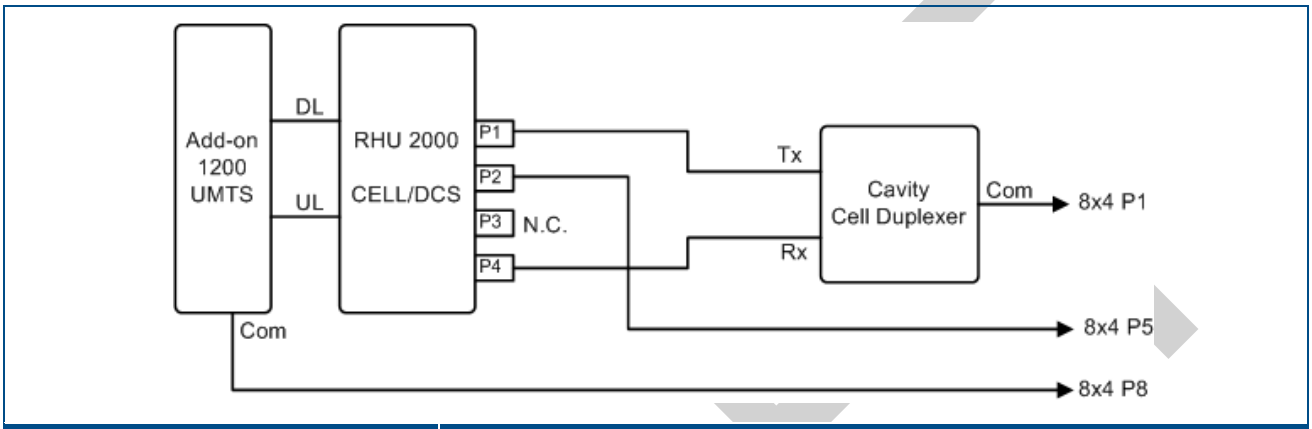

Cell/DCS and UMTS Configuration	Figure 5-8

5.4.2 Typical European & Middle East Configuration: EGSM/DCS + UMTS Configuration

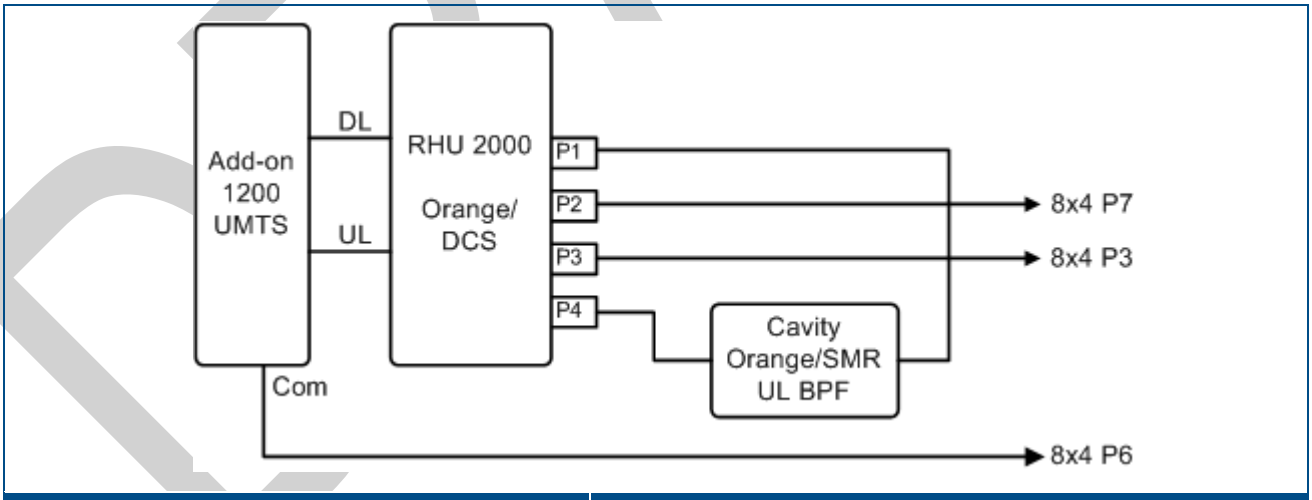

Typical European & Middle East Configuration	Figure 5-9

iDEN support is provided through MA2000 Cabinet configurations.

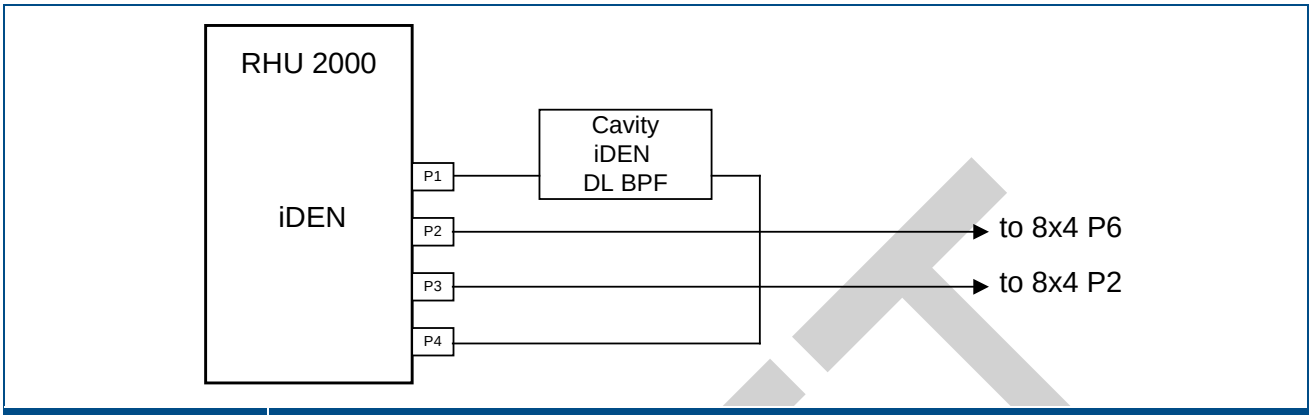

iDEN Configuration | Figure 5-10

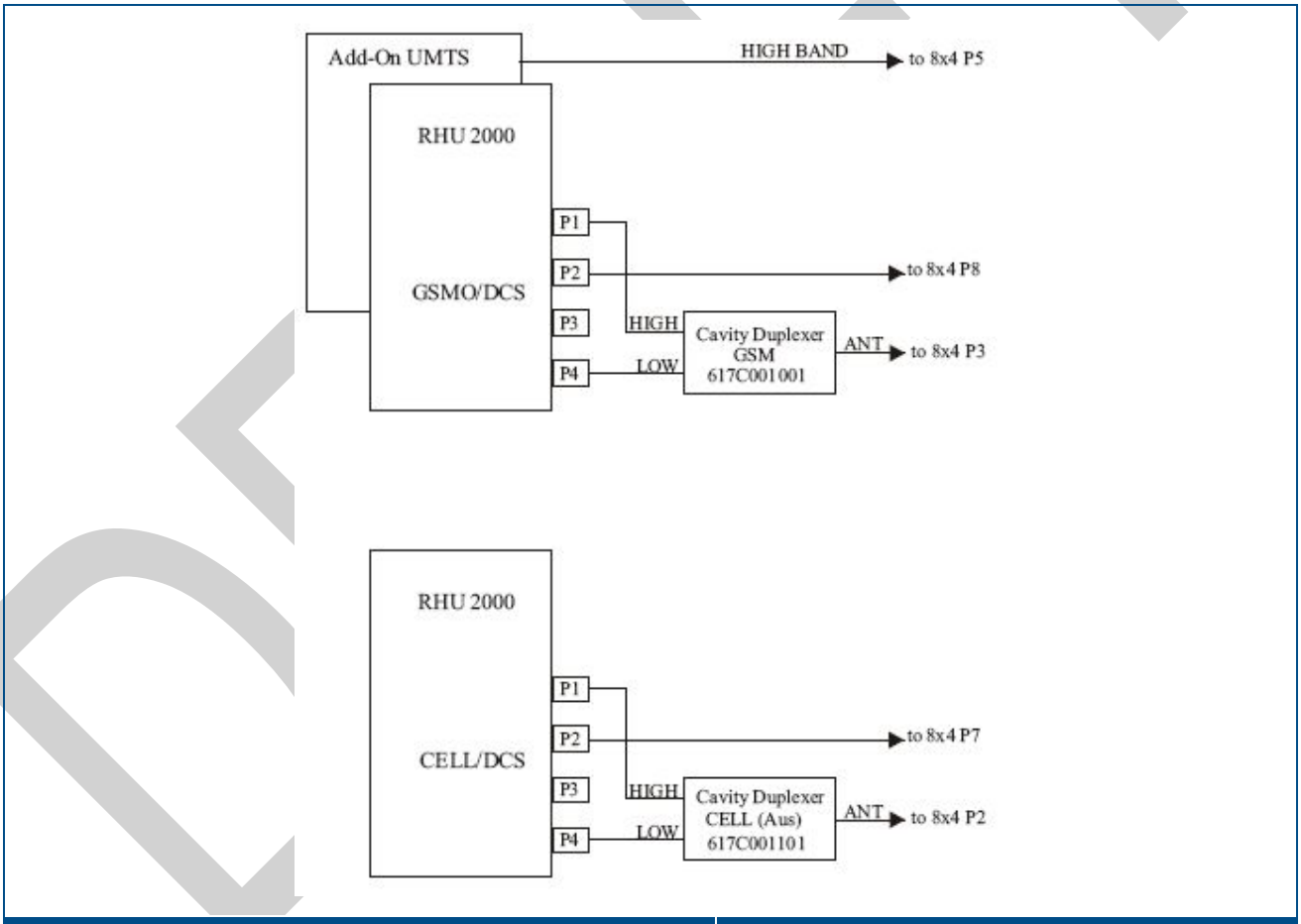

MA2000-Lite Cell/DCS and GSM/DCS Config for Telstra | Figure 5-11

Appendix A : System Specifications

RF Parameters

RF Frequency Range

Services	Frequency Range	
	Uplink	Downlink
CELL	824-849	869-894
iDEN	806-824	851-869
GSM	890-915	935-960
E-GSM	880-915	925-960
Telstra 850M	824-849	869-890
SMR	896-902	929-941
DCS	1710-1785	1805-1880
PCS	1850-1910	1930-1990
G-PCS	1850-1915	1930-1995
UMTS 2100	1920-1980	2110-2170

Low Band

RF Parameters Low Band												
RU 2000	CELL TDMA/CDMA/WCDMA		SMR 800		iDEN 800 Sprint		GSM/ E-GSM		SMR 900		iDEN 900 Sprint	
	DL	UL	DL	UL	DL	UL	DL	UL	DL	UL	DL	UL
Max output PWR per antenna port												
1 (comp)	16		14		10		12		14		10	
2 carriers	13		11		7		9		11		7	
4 carriers	10		8		4		6		8		4	
8 carriers	7		5		1		3		5		1	
12 carriers	5		3		-1		1		3		-1	
Mean Gain(dB)*	16	7	14	7	10	7	12	7	14	7	10	7
Pin (dBm)*	0		0		0		0		0		0	
Input IP3 (dBm) AGC OFF Min		-5		-5		-5		-5		-5		-5
Input IP3 (dBm) AGC ON Min		5		5		5		5		5		5
SFDR** (dB)		71		72		72		64		71		71
Max Intermod Distortion (dBm)	-13		-13		-13		-36		-13		-13	
Max Nf (dB)		20		20		20		20		20		20
Gain Flatn. (dB)						± 2.0						

DRAFT

High Band

RF Parameters High Band						
RU 2000	DCS		PCS CDMA/WCDMA		PCS GSM/TDMA	
	DL	UL	DL	UL	DL	UL
Max output PWR per Antenna Port 1 (comp)						
	14		14		16	
2 carriers	11		11		13	
4 carriers	8		9		10	
8 carriers	5		6		7	
12 carriers	3		4		5	
Mean Gain(dB)*	14	3	14	3	14	3
Pin (dBm)*	0		0		2	
Input IP3 (dBm) AGC OFF Min		-6		-6		-6
Input IP3 (dBm) AGC ON Min		3		3		3
SFDR** (dB)		64		66		64
Max Intermod Distortion (dBm)	-30		-13		-13	
Max Nf (dB)		20		20		20
Gain Flatn. (dB)	± 2.0					

*Factory set mean gain BU-RHU without RIU. May be field adjusted using system controller.

** SFDR for CDMA services is calculated in 100Kb/sec

DRAFT

RF Parameters MA1200 Add-on

MA1200 Add-on	G-PCS CDMA/WCDMA		G-PCS GSM/TDMA		UMTS***	
	DL	UL	DL	UL	DL	UL
Max output PWR per Antenna Port						
1 (comp)	20		21		21	
2 carriers	17		18		18	
4 carriers	14		15		15	
8 carriers	11		12		12	
12 carriers	9		10		10	
Mean Gain(dB)*	20	3	20	3	21	3
Pin (dBm)*	0		1		0	
Input IP3 (dBm) AGC OFF Min		-7		-7		-7
Input IP3 (dBm) AGC ON Min		3				3
SFDR** (dB)	66		64		66	70
Max Intermod Distortion (dBm)	-13		-13		***	
Max Nf (dB)		20		20		20
Gain Flatn. (dB)	± 2.0					

*Factory set mean gain BU-RHU without RIU. May be field adjusted using system controller.

** SFDR for CDMA services is calculated in 100Kb/sec

*** UMTS Compiles with 3GPP TS 25.106 V5.0.0 (2002-03) Table 9.4 spectrum emission mask

DRAFT

System Specs

Fiber Optic Specifications

Optical output power	<3.0mW
Max. Optical budget	2 dB for fiber + 1 dB for connectors (assumed) = 3 dB total
Optical loss per mated-pair connectors	0.5dB (max)
Optical Connector	SC/APC
Fiber type	9/125 SM
Wavelength	1310±10nm
Maximum distance between Base Unit and Remote Cabinet	2Km

Absolute Maximum Rating

Total Input RF Power to BU	10dBm
Total Input RF Power to RU	20dBm out-of-band -10dBm in-band
Power Supply VDC	60VDC

Temperature Specifications

Operating	0°C to +50°C (32°F to 122°F)
Storage	-20°C to 85°C (-4°F to 185°F)

DRAFT

Specifications of Units

MA 2000 MRC Remote Hub

Supported Units	: A total of up to five Remote Units (one being a MA 1200 Add-on module) (not including MA 850/860 which is installed externally)
RF antenna connections	: Four N-type female antenna connections
Input power	
Local powering	: 230 VAC, 115 VAC (an AC/DC converter is built into the chassis).
Remote powering	: 20 to 48VDC to external connectors on chassis
Power consumption	: 25W
Physical	
Mounting	: Wallmount and rackmount
Dimensions	: 355 x 482.6 x 397mm (13.97” x 19” x 15.63”)
Weight (4 modules)	: ~35Kg (~77 lb)

MA 2000 Lite

Supported Units	: External connections to two Remote Units (MA 1200 Add-ons each unit)
RF antenna connections	: Four N-type female antenna connections
Power consumption	: 3W max (housing only with no remote units)
Physical	
Mounting	: Wallmount
Dimensions	: 442 x 336 x 86.41mm (17.4” x 13.23” x 3.4”)
Weight	: 5.5Kg (12.1lb)

MA 2000 Remote Unit

Supported services	: Two services corresponding to the model
Power:	
Input power	: 20 to 48V DC
Power consumption	: 29W
RF connections	: To Antenna (via hub) - N-type Female, 50 ohm
	: To MA 1200 add-on - SMA 50 ohm
Optic connections	: SC/APC optic connections
Remote management	: SNMP, NMS via Base Unit connection to SC-450 controller.

MA 1200 Add-On Specifications

Supported services	: Single service corresponding to the model
RF Connections:	: To RHU - SMA 50 ohm
Power:	
Input power	: 25-48VDC
Power consumption	: 50W
Remote management	: SNMP, NMS via RHU connection
Dimensions	27.9x22.0x6.9cm (10.98”x8.66”x2.71”)
Weight	2.8Kg (6.2 lb)

DRAFT

Base unit Specifications

Models:	4-port model, 8-port model (shown above)
Supported services:	Wideband device supporting all services supported by MA systems
RF (total Input):	10 dBm max
Power:	
Input power	20 to 48V DC
Power consumption	14W (8-port BU)
RF connections	N-type Female, 50 ohm – interface to RIU or to passive BTS interface
	N-type Female, 50 ohm – interface to antennas
Optic connections	Four or eight (depending on the model) SC/APC optic connections
Remote management	SNMP, NMS via connection to SC-450 controller.
Physical	
Dimensions	48.26x4.44x29.97cm (19”x1Ux11.8”)
Weight	2.82Kg (6.2lb)

DRAFT

Appendix B: Ordering Information

Note: The information listed below is updated up to the document publishing date. Refer to the MA2000 datasheet for the most updated ordering information.

Remote HUBs	
2000-RC-RP	Remote Cabinet - all services, Remote powering
2000-RC-LP	Remote Cabinet - all services, Local powering
2000-MINI-ENC	2000 enclosure supporting 2 modules
Dual Band RF Modules, add-on ready	
MA2000 Cabinet	
2000-CELL-DCSE	Dual band Cell/DCS 1 port for cabinet, enhanced power
2000-CELL-PCSE	Dual band Cell/PCS 1 port for cabinet, enhanced power
2000-GSMO-DCSE	Dual band GSM DCS 1port for cabinet, enhanced power
2000-IDEN-SMR	Dual band iDEN/SMR for cabinet
2000-E-GSM-DCS	Dual band EGSM/DCS 1 port for cabinet
MA2000-Lite	
2000-CELL-DCSEL	Dual band Cell/DCS 1 port for Lite, enhanced power
2000-CELL-PCSEL	Dual band Cell/PCS 1 port for Lite, enhanced power
2000-E-GSM-DCSL	Dual band GSM/DCS 1 port for Lite, enhanced power
2000-GSMO-DCSEL	Dual band GSM DCS 1 port for Lite, enhanced power
2000-IDEN-SMR-L	Dual band iDEN/SMR for Lite
2000-CELL-DCSLT	Dual band Cell/DCS 1 port for Lite enhanced power for Telstra
2000-GSM-DCSLT	Dual band GSM/DCS 1 port for Lite enhanced power for Telstra
MA1200 Add-On	
1200-PCS-AO-CB	Add-on RHU - PCS service for cabinet
1200-G-PCS-AO-CB	Add-on RHU supporting a PCS w/G-block for 2000 cabinet
1200-UMTSE-AO-CB	Add-on RHU - UMTS service for cabinet
1200-PCS-AO-LT	Add-on RHU - PCS service for Lite
1200-UMTSE-AO-LT	Add-on RHU - UMTS service for Lite

Corning CORE System Universal Base Units	
WB-B8U	Wide Band Base 8 Unit supporting 8 RHUs
WB-B4U	Wide Band Base 4 Unit supporting 4 RHUs

Network Controller

SC-450	Network Controller –Ethernet/IP Interface
410	Network Controller – Serial Interface (dial-up)
430	Network Controller –Ethernet/IP Interface

Network Management System	
NMS-SW-SERVER	GUI and server S/W package (one per site)
NMS-SW-MFEE	NMS annual S/W maintenance fee (per 430-CTLR)

Corning CORE System Radio Interface Unit (RIU)	
RIU-IM	Radio Interface Unit
RIU-BTSC-CELL	BTS Conditioner for Cellular
RIU-BTSC-IDEN	BTS Conditioner for iDEN
RIU-BTSC-PCS	BTS Conditioner for PCS
RIU-BTSC-G-PCS	BTS Conditioner for PCS w/ G-Block support
RIU-BTSC-SMR	BTS Conditioner for SMR-Paging
RIU-BTSC-GSM	BTS Conditioner for GSM 900MHz
RIU-BTSC-E-GSM	BTS Conditioner for EGSM 900MHz
RIU-BTSC-DCS	BTS Conditioner for DCS 1800MHz
RIU-BTSC-UMTS	BTS Conditioner for UMTS 2100MHz
RIU-BDAC-CELL	BDA Conditioner for Cellular
RIU-BDAC-IDEN	BDA Conditioner for iDEN
RIU-BDAC-PCS	BDA Conditioner for PCS
RIU-BDAC-G-PCS	BDA Conditioner for PCS w/ G-Block support
RIU-BDAC-SMR	BDA Conditioner for SMR-Paging
RIU-L-IDEN-SMR-G-PCS1	RIU Lite for iDEN800,SMR 900,PCS1900 w/G-Block, support 1BU8
RIU-L-CELL-PCS1	RIU Lite Cellular 800,PCS 1900

Power Supply	
LPS-48V-66W	Local AC/DC Converter 66W
LPS-48V-100W	Local AC/DC Converter 100W
AK-PWR-CORD-EU	AC Power cord for 66W & 100W power supplies, European connector
AK-PWR-CORD-UK	AC Power cord for 66W & 100W power supplies, UK connector

Corning Optical Communications, Inc. 13221 Woodland Park Rd, Suite 400, Suite 400 • Herndon, VA 20171 USA
866-436-9266 • FAX: 703-848-0280 • Tech Support Hotline: 410-553-2086 or 800-787-1266 • www.corning.com/opcomm
Corning Optical Communications reserves the right to improve, enhance and modify the features and specifications of Corning Optical Communications products without prior notification. All trademarks are the properties of their respective owners. Corning Optical Communications is ISO 9001 certified. © 2013 Corning Optical Communications. All rights reserved.
Published in the USA.
UM_ Corning CORE MA2000_709C006503_A00_30APRIL2014