MobileAccess™ 2000 System

Installation and Configuration Guide

UM 2000, Rev 1.1

October, 2004

MobileAccess 2000

MobileAccess Ltd. Vienna, Virginia Tel: +1-703-848-0200
MobileAccess Ltd. Lod, Israel Tel: +972-8-9183888
http://www.MobileAccess.com
Email: sales@MobileAccess.com

Copyright © 2004 MobileAccess.

© 2004 by MobileAccess

This document contains confidential and proprietary information of MobileAccess and may not be copied, transmitted, stored in a retrieval system or reproduced in any format or media, in whole or in part, without the prior written consent of MobileAccess. Information contained in this document supersedes any previous manuals, guides, specifications, data sheets or other information that may have been provided or made available to the user. This document is provided for informational purposes only, and MobileAccess does not warrant or guarantee the accuracy, adequacy, quality, validity, completeness or suitability for any purpose of the information contained in this document. MobileAccess reserves the right to make updates, improvements and enhancements to this document and the products to which it relates at any time without prior notice to the user. MOBILEACCESS MAKES NO WARRANTIES, EXPRESS OR IMPLIED, INCLUDING, WITHOUT LIMITATION, THOSE OF MERCHANTABILITY AND FITNESS FOR A PARTICULAR PURPOSE, WITH RESPECT TO THIS DOCUMENT OR ANY INFORMATION CONTAINED HEREIN.

TRADEMARK ACKNOWLEDGEMENT

MobileAccess™ is a registered trademark of MobileAccess. This document contains other trademarks, trade names and service marks of MobileAccess and other organizations, all of which are the property of their respective owners.

POLICY FOR WARRANTEE AND REPAIR

MobileAccess tests and inspects all its products to verify their quality and reliability. MobileAccess uses every reasonable precaution to ensure that each unit meets their declared specifications before shipment. Customers should advise their incoming inspection, assembly, and test personnel about the precautions required in handling and testing our products. Many of these precautions can be found in this manual.

The products are covered by the following warranties:

General Warranty

MobileAccess warrants to the original purchaser all standard products sold by MobileAccess to be free of defects in material and workmanship for one (1) year from date of shipment from MobileAccess. During the warranty period, MobileAccess will repair or replace any product that MobileAccess proves to be defective. This warranty does not apply to any product that has been subject to alteration, abuse, improper installation or application, accident, electrical or environmental over-stress, negligence in use, storage, transportation or handling.

Specific Product Warranty Instructions

All MobileAccess products are warranted against defects in workmanship, materials and construction, and to no further extent. Any claim for repair or replacement of units found to be defective on incoming inspection by a customer must be made within 30 days of receipt of shipment, or within 30 days of discovery of a defect within the warranty period.

This warranty is the only warranty made by MobileAccess and is in lieu of all other warranties, expressed or implied. MobileAccess sales agents or representatives are not authorized to make commitments on warranty returns.

RETURNS

In the event that it is necessary to return any product against above warranty, the following procedure shall be followed:

1. Return authorization is to be received from MobileAccess prior to returning any unit. Advise MobileAccess of the model, serial number, and discrepancy. The unit may then be forwarded to MobileAccess, transportation prepaid. Devices returned collect or without authorization may not be accepted.
2. Prior to repair, MobileAccess will advise the customer of our test results and any charges for repairing customer-caused problems or out-of-warranty conditions etc.
3. Repaired products are warranted for the balance of the original warranty period, or at least 90 days from date of shipment.

LIMITATIONS OF LIABILITIES

MobileAccess's liability on any claim, of any kind, including negligence for any loss or damage arising from, connected with, or resulting from the purchase order, contract, quotation, or from the performance or breach thereof, or from the design, manufacture, sale, delivery, installation, inspection, operation or use of any equipment covered by or furnished under this contact, shall in no case exceed the purchase price of the device which gives rise to the claim.

EXCEPT AS EXPRESSLY PROVIDED HEREIN, MOBILEACCESS MAKES NO WARRANTY, EXPRESSED OR IMPLIED, WITH RESPECT TO ANY GOODS, PARTS AND SERVICES PROVIDED IN CONNECTION WITH THIS AGREEMENT INCLUDING, BUT NOT LIMITED TO, THE IMPLIED WARRANTIES OF MERCHANTABILITY AND FITNESS FOR A PARTICULAR PURPOSE. MOBILEACCESS SHALL NOT BE LIABLE FOR ANY OTHER DAMAGE INCLUDING, BUT NOT LIMITED TO, INDIRECT, SPECIAL OR CONSEQUENTIAL DAMAGES ARISING OUT OF OR IN CONNECTION WITH FURNISHING OF GOODS, PARTS AND SERVICE HEREUNDER, OR THE PERFORMANCE, USE OF, OR INABILITY TO USE THE GOODS, PARTS AND SERVICE.

REPORTING DEFECTS

The units were inspected before shipment and found to be free of mechanical and electrical defects.

Examine the units for any damage that may have been caused in transit. If damage is discovered, file a claim with the freight carrier immediately. Notify MobileAccess as soon as possible.

NOTE: *Keep all packing material until you have completed the inspection*

WARNING: To comply with FCC RF exposure compliance requirements, antennas used for this product must be fixed mounted on indoor permanent structures, providing a separation distance of at least 20 cm from all persons during normal operation.

WARNING: Antenna gain should not exceed 10dB.

WARNING: Each individual antenna used for this transmitter must be installed to provide a minimum separation distance of 20 cm or more from all persons and must not be co-located with any other antenna for meeting RF exposure requirements.

WARNING: The design of the antenna installation needs to be implemented in such a way so as to ensure RF radiation safety levels and non- environmental pollution during operation.

ATTENTION:

Compliance with RF safety requirements:

- MobileAccess™ products have no inherent significant RF radiation.
- The RF level on the down link is very low at the Remote Units (RUs) downlink ports. Therefore, there is no dangerous RF radiation when the antenna is not connected.

CERTIFICATION

MobileAccess products have met the approvals of the following certifying organizations:

ISO 9001

For US

FCC 47 CFT part 22,24,90
FDA-CDRH

For Canada

RSS-118, RSS-119, RSS-133….

Preface

This user guide provides all the information necessary to install and configure the MobileAccess 2000 System.

Revision History

The revision history for this document is shown in Table 1-1.

Table 1-1: Revision history

Version	Date	Description
1.0	September 2004	Initial version.
1.1	Oct-04	Text editing

Table of Contents

1 Introduction 1

1.1 About MobileAccess™ 2000 1

1.1.1 Features 2

1.2 System Architecture 2

1.3 MA 410/430 Remote Management 4

1.4 MobileAccess Models 5

2 Site Preparation 7

2.1 Infrastructure Preparation 7

2.2 Installation Requirements 7

2.3 Coaxial Cable Connections 7

2.3.1 General Cable Installation Procedures 7

2.3.2 Fiber Optic Rules 8

2.3.3 RF Rules 8

2.4 Power Consumption, Connections and Power Supplies 9

2.4.1 Power Consumption of Units 9

2.4.2 Types of Power Supplies 9

2.5 Installation Conventions 10

3 Rack and Cabinet Installations 12

3.1 Overview 12

3.2 Communication Room Installation 12

3.2.1 Single Building Rack Installation 13

3.2.2 Multi-Building Rack Installation 15

3.3 Remote Cabinet Installation and Connections 16

3.3.1 RC 2000 Wall Mount Installation 16

3.3.2 Wall Mount RC Grounding 17

3.3.3 RC 2000 Rack Mount Installation 18

3.3.4 Fiber Optic Connections 19

3.3.5 Power Connections 20

Integrated Power Supply model 20

External Power Supplies Model 20

3.3.6 Antenna Connections 20

3.4 MA 850 Installations 21

3.4.1 MA 850 RC 2000 Assembly 21
3.4.2 MA 850 Rack Mount 23
3.4.3 MA 850 Wall Mount Installation 23
3.5 2000 Lite Installation and Connections 24
3.5.1 MA 2000 Lite Coax Connections 24
3.5.2 MA 850 Installation Connections 24

4 System Elements 25

4.1 Overview 25
4.2 MA 2000 Remote Cabinet 26
4.3 MA 2000 2000 Lite Installation 28
4.3.1 Connections 28
4.4 Remote Modules 28
4.4.1 Remote Units 2000 29
RU 2000 Front Panel 29
RU 2000 Rear Panel 30
Connections 30
4.4.2 MA 1200 Add-on 31
RHU 1200 Front Panel 31
RHU 1200 Rear Panel 32
Connections 32
4.4.3 MA-850 Module 33
MA 850 Front Panel 33
MA 850 Rear Panel 34
4.5 Radio Interface Unit (RIU) 34
RIU Front Panel 36
RIU Rear Panel 37
RIU Connections 37
Connections to Additional BUs 38
4.6 MA Base Units 38
MA BU Front Panel 39
BU Rear Panel 40
BU connections 40
4.7 MobileAccess NMS System 41

5 Appendix I: Optical Test Procedures 43

5.1 General 43
5.2 Optical Loss Testing of a Single Mode Cable with SC/APC connectors at each end 43
5.2.1 Required Test Equipment 43

5.2.2 Test Procedure 44
5.2.3 Example 45
5.3 Optical Backreflection Testing of SM SC/APC connectors at each end of an optical cable 46
5.3.1 Required Test Equipment 46
5.3.2 Test Procedure 46

1 Introduction

1.1 About MobileAccess™ 2000

MobileAccess™ 2000 converged wireless networks solution provides scalable in-building coverage for multiple wireless data and voice services through a single coax and broadband antenna infrastructure.

The solution is based on combining a number of services, both voice and data, at each covered location. The services, supported by remote units are combined and interfaced to a common antenna infrastructure.

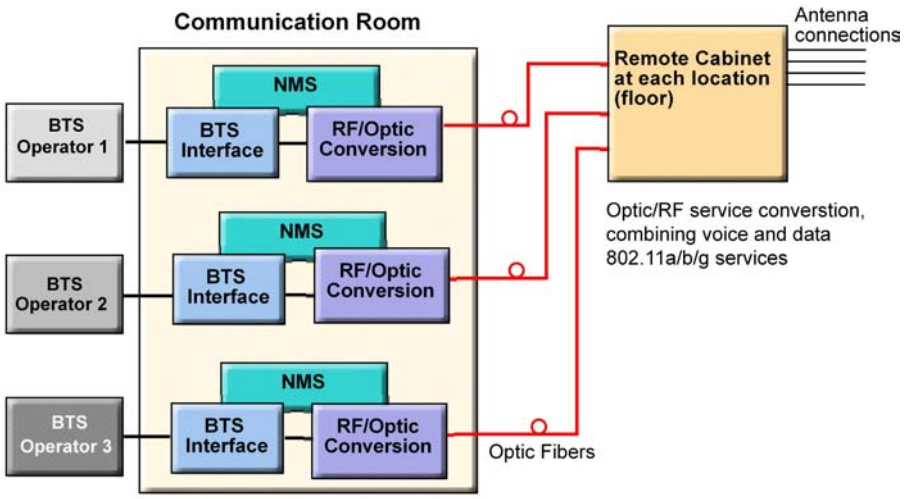

Figure 1-1. MA 2000 System Overview

Voice services are transmitted between the BTS side and the locations via optic fiber after the appropriate conversion from RF to optic, and reconverted to RF at each end. The MA 2000 scalable solution is available in various configurations designed to meet the needs of sites of various sizes:

- **Remote Cabinets** – The remote cabinet is designed for larger sites requiring future safe support for several operators. The remote units supporting the services are compactly housed inside a cabinet that provides the required interfaces, filtering and combining functionalities.
- **2000 Lite** – The 2000 Lite is designed to provide coverage for smaller sites with fewer services, or as an entry-level solution for larger sites. This solution provides support for a few services implemented by one or two remote units. The remote units in this configuration are installed externally to the enclosure.

Wireless 802.11/a/b/g coverage may be integrated into the MA 2000 system (either configuration) using the **MA 850** remote module (that supports wireless LAN service distribution).

To optimize system coverage under changing environmental conditions or load, as well as to enable remote monitoring of all system elements from a central location, MobileAccess provides the following MA 2000 system enhancement solutions:

- Manageable BTS interface devices that control the level of the BTS signal fed into the system (Radio Interface Unit)
- Network Management System (NMS) consisting of controllers, adjustment and management software

1.1.1 Features

- All services are distributed through a *single* coax and antenna infrastructure
- Each Remote Cabinet can house up to five remote units supporting up to 20 services including 3G and 802.11a/b/g
- Each 2000 Lite supports up to two remote units to which MA 1200 add-on modules may be connected, providing support for up to 8 services
- Support for all current and future technologies such as TDMA, CDMA, WCDMA and GSM, and services such as PCS/CELLULAR, Paging, iDEN and 802.11 (a/b/g) Wireless LAN
- Scalable and future-safe **–** additional remote units can *easily* be installed
- Support for remote monitoring through MA 410/430 controllers
- All active components are located in the communication closet/room

1.2 System Architecture

The MA 2000 solution is based on the following main elements:

- **MA Base Units (BUs) –** The BUs perform RF to optic conversion on the BTS side.
- **MA Remote Units (RUs) 2000 –** The MA 2000 performs the RF to optic signal conversion at the antenna side for up to two services corresponding to the RU model. A third service can be added by connecting an add-on remote hub unit **(MA 1200)** to the RU 2000. The RUs are housed in the 2000 Remote Cabinet.
- **MA 850** – The MA 850 is a wireless LAN module that provides secure and centralized connections for 802.11a/b/g Access Points and distributes the wireless services over the same coax and broadband infrastructure as the voice services.

All services are combined and distributed through the same antenna broadband infrastructure.

2000 Lite which can support two RU 2000 modules (and MA 1200 add-on units) may be used as an entry point for sites that support a minimal number of operators. This installation is future safe and can easily be upgraded to support additional operators or services (using MA Remote Cabinet configuration).

To provide optimum coverage at all times and monitoring and control of all system elements from a central location MA provides the following devices:

- **MA Radio Interface Units** (RIUs) – The RIUs provide interfaces for up to three BTS/BDA signals, and automatically adjusts the output signal in respose to input signal level in order to provide optimal coverage.
- **MA 410/430 controllers** – The controllers enable remote monitoring of the system elements from a *single location* via advanced intuitive GUI.

The following figure illustrates a MA 2000 system that includes MA 410/430 controllers, RIUs and is based on a Remote Cabinet configuration. This type of installation may be powered locally or remotely form a single power and UPS source.

The system in this example distributes five services: three from one operator, through one RU and a 1200 add-on module, and two additional services through a second RU.

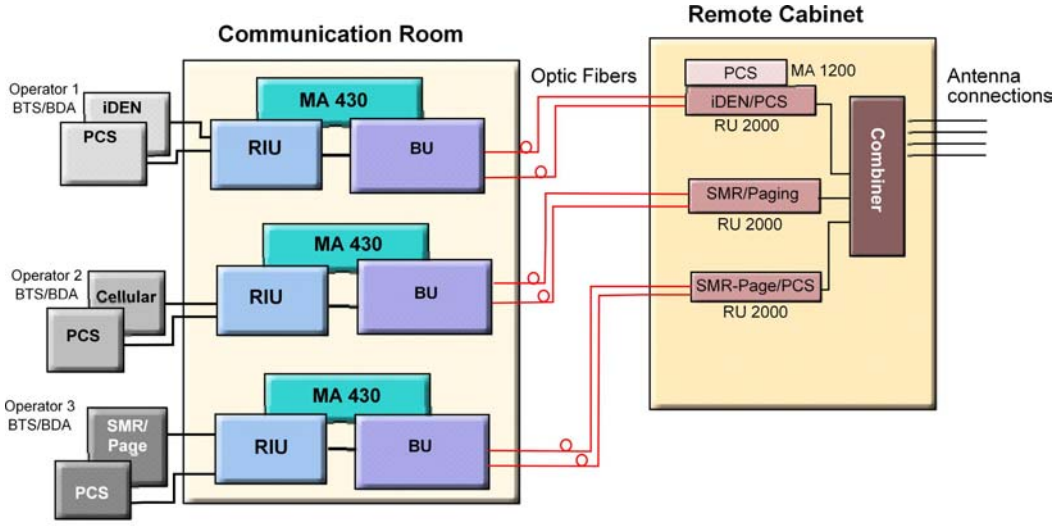

Figure 1-2. Example of a MobileAccess 2000 System

1.3 MA 410/430 Remote Management

The MobileAccess (MA) Network Management System (NMS) provides complete site coverage and network management. It can be used to provision coverage that can compensate for changing loads. It also provides real-time monitoring, control and diagnostics capabilities for *MobileAccess* devices from a single location.

NOTE: *The MA NMS System is fully described in the MA NMS System Configuration and Operation Guide.*

The MA NMS system consists of:

- **MA 410/430 Controller** – The controller provides the interface between the system elements and the management and control mechanism. Two controller models are available:
  - MobileAccess 410™ – enables management of the connected devices through a local or point-to-point dial-up connection. It can be remotely managed through a connection to the MobileAccess 430 controller.
  - MobileAccess 430™ – enables management of all connected elements and all connected MA 410 controllers and the corresponding elements. Supports SNMP (Simple Network Management Protocol) over TCP/IP connection.
  - MA 430 may be managed through the Network Operator Center (NOC) through Manager of Mangers element such as HP OpenView via SNMP.
- **MCT** – a Java based GUI application provided with both controllers. The MCT is used after the installation procedure to adjust MobileAccess devices according to the installation site characteristics in order to optimize coverage for the site.

  The application is installed and ran from a computer that is connected either locally or via remote dial-up modem to the controller site to be adjusted or monitored.
- **MobileAccess Manager™** – a Java based GUI software application that provides enhanced monitoring and control capabilities for all your *MA 430™* sites from a single location; each site can consist of a standalone MA 430 controller, or a MA 430 controller in a Master topology with a number of MA 410 controllers connected as slaves. The **MobileAccess Manager** application is not supplied with the controller – it is *purchased separately.*

The MA NMS application is installed on a server and is accessed from any client by connecting to the server from any Web Browser with enhanced Java VM capabilities.

MA NMS manager provides the following features and capabilities:

- Remote SNMP management from a single location
- Client/server management capability over a TCP/IP network with enhanced monitoring and control capabilities
- Intuitive GUI that enables end-to-end fault sourcing from RIU to antennas. The GUI includes:
  - System status at a glance through multi-color tree with upward propagation of fault indications

- Graphical view of system elements including LED status displays and auxiliary connections
- Multi-color event monitoring display
- RF Connections

1.4 MobileAccess Models

Table 1-1: MobileAccess™ Remote Cabinet Models

MobileAccess Remote Cabinet	
2000-RC-RP	Remote Cabinet, remote powering – integrated DC power supply
2000-RC-LP	Remote Cabinet, local powering
2000 - MINI-ENC (2000 Lite)	2000 system supporting two modules (external to the system)

Table 1-2: MobileAccess™ BU Models

MobileAccess Universal Base Units (1000, 1200, 2000 support)	
WB-B8U	Wide Band Base 8 Unit supporting 8 RUs
WB-B4U	Wide Band Base 4 Unit supporting 4 RUs

Table 1-3: MobileAccess™ 2000 RU Models with Add-on Capabilities

MobileAccess 2000 RUs (ready for add-on units)	
2000-IDEN-PCS	Dual Band iDEN/PCS
2000-CELL-PCS	Dual Band Cell/PCS
2000-GSM-DCS	Dual Band Cell/DCS
2000-SMR-PCS	Dual Band SMR-Paging 900/PCS
2000-CELL-DCS	Dual Band Cell/DCS
2000D-CL-M-DCS4	Multi-operator/DCS
2000-GSMO-DC	GSM/DCS
2000-GSMO-DCS	GSM Orange/DCS

Table 1-4: MobileAccess™ 1200 Add-on Models

MA 1200 Add-on	
1200-PCS-AO	Add-on RHU - PCS service
1200-UMTS-AO	Add-on RHU - UMTS service

Table 1-5: MobileAccess™ Controller Models

Network Controller	
410	Network Controller – Serial Interface (dial-up)
430	Network Controller – Ethernet/IP Interface

Table 1-6: MobileAccess™ Management System

Network Management System	
NMS-SW-SERVER	GUI and server S/W package (one per site)
NMS-SW-MFEE	NMS annual S/W maintenance fee (per 430-CTLR)

Table 1-7: MobileAccess™ RIU

Radio Interface Unit	
RIU-IM	Radio Interface Unit
RIU-BTSC-CELL	BTS Conditioner for Cellular
RIU-BTSC-IDEN	BTS Conditioner for iDEN
RIU-BTSC-PCS	BTS Conditioner for PCS
RIU-BTSC-SMR	BTS Conditioner for SMR-Paging
RIU-BTSC-GSM	BTS Conditioner for GSM 900MHz
RIU-BTSC-GSM-O	BTS Conditioner for GSM 900MHz for Orange
RIU-BTSC-DCS	BTS Conditioner for DCS 1800MHz
RIU-BTSC-UMTS	BTS Conditioner for UMTS 2100MHz

2 Site Preparation

2.1 Infrastructure Preparation

This following installation rules are based on the assumption that site survey and installation planning (*including power requirements*) have been completed.

2.2 Installation Requirements

The infrastructure preparation consists of two main phases:

A. **Floor Planning:** Planning the distribution of the antennas on each floor to provide the required coverage.

B. **Telecom Closet Planning:** Planning the layout of the devices and cables in the telecom closet or shaft. This includes the MA 850, 802.11 Access Points, cabling and other voice service distribution systems that are relevant to the specific installation.

2.3 Coaxial Cable Connections

2.3.1 General Cable Installation Procedures

Observe the general cable installation procedures that meet with the building codes in your area. The building code requires that all cabling be installed above ceiling level (where applicable). Each length of cable from the risers to each antenna must be concealed above ceiling.

The cable must be properly supported and maintained straight using tie-wraps, cable trays and clamps or hangers every 10 feet (where practical above ceiling level). Where this is not practical, the following should be observed:

- The minimum bending radius of the supplied ½" coax cable should be 7".
- Cable that is kinked or has a bending radius smaller than 7" must be replaced.
- Cable runs that span less than two floors should be secured to suitably located mechanical structures.
- The cables should be supported only from the building structure.

2.3.2 Fiber Optic Rules

- Use only single mode fiber for indoor applications.
- **Use only 8-degree SC/APC connectors (green color).**
- Use **only** fusion splice for connecting two fibers.
- Use minimum splicing/connectors to achieve minimum losses on the fibers (<0.5dB).
- Use precaution while installing, bending, or connecting fiber optic cables.
- Use an optical power meter and OTDR for checking the fiber optic cables.
- Make sure the environment is **clean** while connecting/splicing fiber optic cables.
- All fiber optic connections should be cleaned prior to attaching to termination points using a dry cleaning device like the Cletop.
- Fiber connector protective caps should be installed on all non terminated fibers and removed just before they are terminated.
- Verify the Fiber Optic connections. You may use the Optical Test Procedure described at the end of this manual.
- Pay special attention while connecting the SC/APC connectors - you must hear the "click" when the connection is made.

2.3.3 RF Rules

- Use coax ½", 50ohm, male-to-male N-type, (6-7dB for 1Ghz, 11dB for 2Ghz) for connecting to RU and RHU ports.
- Use coax RG223, 50ohm, male-to-male N-type for connecting RF side from the Base Unit to the BTS/RBS side.
- When using the MobileAccess™ system in an environment in which other indoor coverage systems are installed, pay special attention to the isolation between antennas (**distance must exceed 2 meters**).
- Use special attention while bending coax cables, the bending radius must not exceed the coax specifications.
- Use any antennas suitable to the desired frequency.
- Use VSWR meter (Site Master) for checking coax cables, including the antennas. (<2). The VSWR must be measured prior to terminating the RUs in the remote communication rooms
- Terminate all unused **RU** and **RIU** ports with a 50 ohm load.

2.4 Power Consumption, Connections and Power Supplies

Calculate the required power according to the requirements of the specific installation and then determine the configuration of the power supplies. The required DC cables will then be determined by the selected PS configuration.

2.4.1 Power Consumption of Units

Table 2-1. MobileAccess™ Power Requirements

Unit Type	Voltage Input	Power Consumption
RIU	20 to 48VDC	10W
Base Unit	20 to 48VDC	14W
Remote Unit 2000	20 to 48VDC	25W
Add-on Unit 1200	20 to 48VDC	50W
410/430 Controller	20 to 48VDC	10W
Remote Cabinet	20 to 48VDC	15W

2.4.2 Types of Power Supplies

MobileAccess supplies various power supplies that can be installed in a rack or mounted on a wall, depending on your configuration.

Table 2-2: MobileAccess™ Power Supplies

Power Supply	
LPS-48V-40W	Local AC/DC Converter 40W
LPS-48V-100W	Local AC/DC Converter 100W
RPS-200-N-48	Non-redundant 200W 110/220V Wall Mount
RPS-500-R-48	Redundant 500W 110/220V Chassis Mount
RPS-1000-R-48	Redundant 1000W 110/220V Chassis Mount
RPS-14-50W-48	Remote power supply,14 modules of 50W,48V
RPS-14-100W-48	Remote power supply,14 modules of 100W,48V
RPS-6M-220	Remote power supply enclosure,6 Modules,220v in-48VDC
RPS-600W-220	Remote power supply module 600W/48VDC,220V in
RPS-1200W-220	Remote power supply module 1200W/48VDC,220V in

2.5 Installation Conventions

Some of the basic installation conventions are listed below for the MA 2000 system:

- **Base Units** – are usually concentrated in the same location, most often in the main communication room.
- **Remote Cabinet (or 2000 Lite)** – usually placed in the communication shaft or closet of a corresponding floor so they can be easily located. Each cabinet (2000 Lite) can typically cover a floor of up to 30,000 sq ft.
- **Fiber optic cable** - Bundled fiber is terminated into the Base Unit in the main communication room. This fiber is then ran vertically throughout the building through a communication shaft or vertical riser. Individual fibers terminate on floors into a slice box. The splice box couples the installed fiber into the remote units. Not all fibers will terminate on a single floor. A portion of the vertically ran fibers will terminate on each floor. Fiber cables should be purchased with enough spare fibers terminated on each floor to support future growth.

  NOTE: *For example, for three remote units, six fibers are required. However, to allow for future upgrades, it is recommended to install additional optic fibers to be connected to additional RUs.*

- **For remote power supply configuration - single source power cable –** a single cable bundle is ran from the main communication room. This bundle will consist of a number of 18 gauge wire pairs (typical). Individual wire pairs are terminated into the power feed of individual units.

  By providing power from a single distribution point maintenance can be reduced and UPS backup can be easily provided. The maximum distance from the source to the termination spot is 1000 feet using 18 gauge wires. Power is typically less than 100 watts.

  In many locations local codes do not require power to be run through conduit if 100 watts or less is used. Please consult the regulations within your local jurisdiction prior to deploying remote power. When power cables require distances greater than 1000 feet 14 or 16 gauge wire may be used. 14 or 16 gauge wire offers less impedance than 18 gauge wire. While this wire is more expensive the nominal price increase far outweighs the purchase of additional hardware.

- **On each floor**, the antennas are connected to the Remote Cabinet or 2000 Lite system using coax cables.

The following page shows an example of routing of Fiber Optic and power cables in a multi story building using the installation conventions previously described.

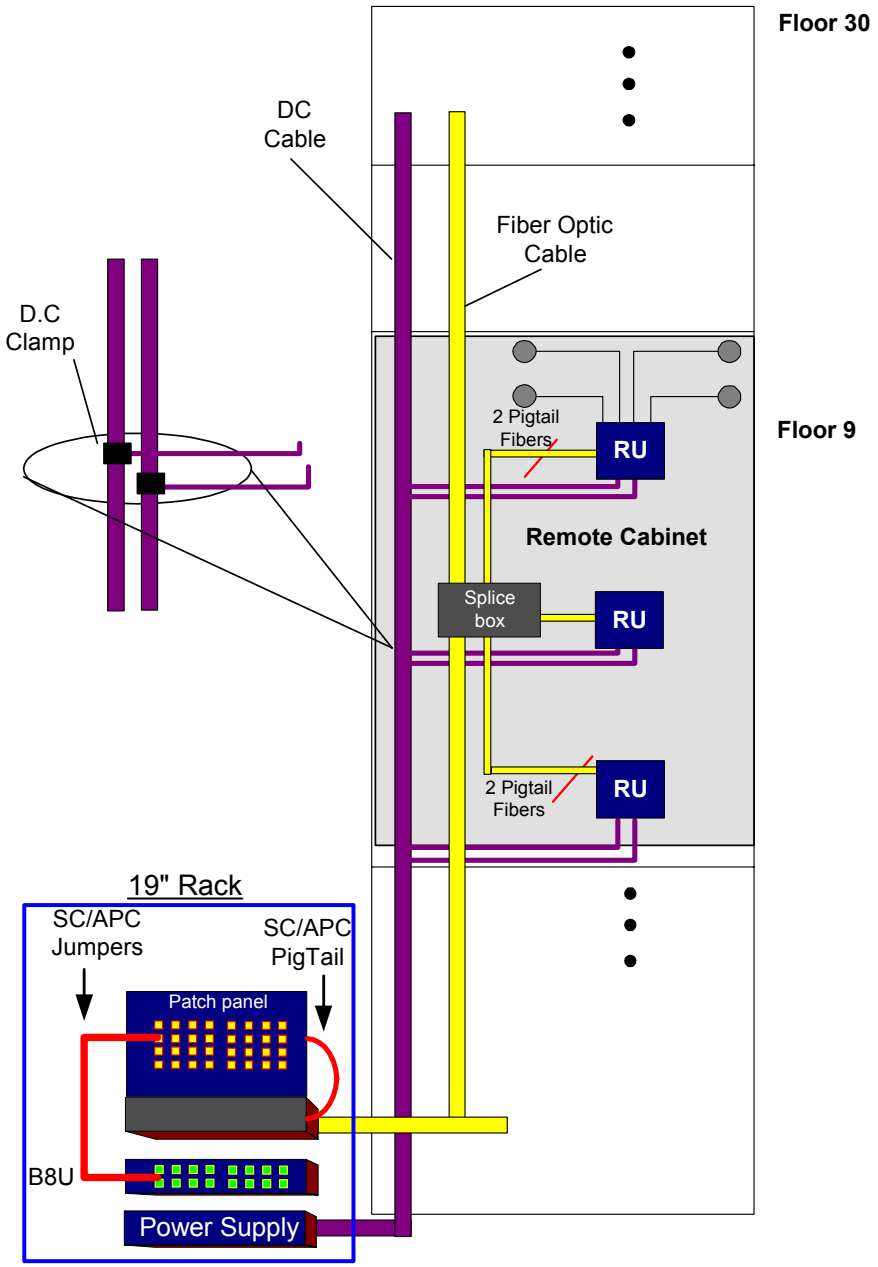

Figure 2-1- Fiber Optic and Power Cables Routing Example

3 Rack and Cabinet Installations

3.1 Overview

This chapter describes how the communication room and cabinet are installed. The individual system elements and connections are described in the Chapter 4.

3.2 Communication Room Installation

NOTE: *Usually, each operator installs the equipment that supports their services in a separate rack.*

It is recommended to install the following MobileAccess system modules in a 19" rack in the communication room

- RIU 3U
- BU 1U
- MobileAccess 410/430 controller 1U
- Fiber Optic patch panel and splice tray
- Power supply/supplies (MobileAccess – 3U for each unit; units from other manufacturers may vary in size)

Verify that the rack height can support all the units to be installed, where you may also want to consider future expansions.

The following image displays the recommended physical deployment of the MobileAccess elements in the rack in order to facilitate and simplify the cabling *connections.*

The configuration is for a single operator. If the site is serviced by more than one operator, each operator often installs their equipment in a separate rack.

Note that the **MobileAccess 410/430 controller** is at eye level to provide an easy view of the LED indicators and LCD display and easy access to the local and remote monitoring connections.

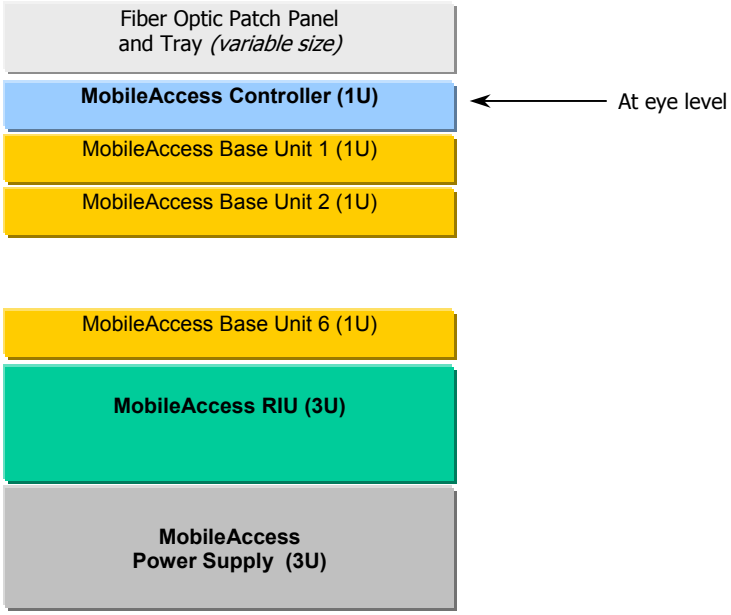

Figure 3-1: Recommended Order In Rack

3.2.1 Single Building Rack Installation

This section provides an example of a single building **main communication room** installation for the a 24-floor building which will distribute three services: Cellular, iDEN/PCs (where Cellular and iDEN/PCS are supplied by the same operators).

Since there are 24 floors, then 24 RCs will be needed: one on each floor. Each RC will house two RUs.

In addition, the following equipment will be installed in the main communication room:

- Six BUs – three to support 24 RCs for **Cellular/PCS RU**, and three additional BUs to support **iDEN/PCS RU**
- Two MA 410/430 controllers to support the BUs: one MA 430 controller configured as Master, and one MA 410 controller configured as slave.

  NOTE: *This example shows a Master/Slave configuration, but if a network is easily available, two MA 430 controllers may be directly connected to the network and monitored from a single location.*

- RIU – to interface to the BTS/BDA

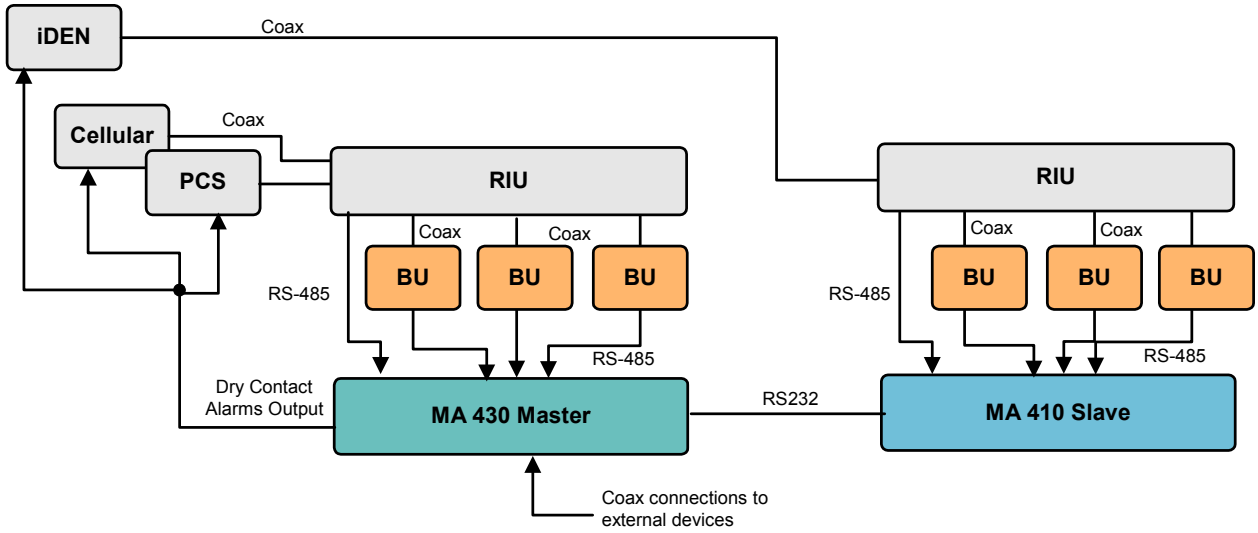

Figure 3-2. Example of Single-building Topology Communication Room Installation

One possible placement for this topology would be to have the devices supporting each operator in a separate rack as illustrated in the following figure.

NOTE: *It is recommended to place the* ***MA 410/430*** *controllers at* ***eye-level.***

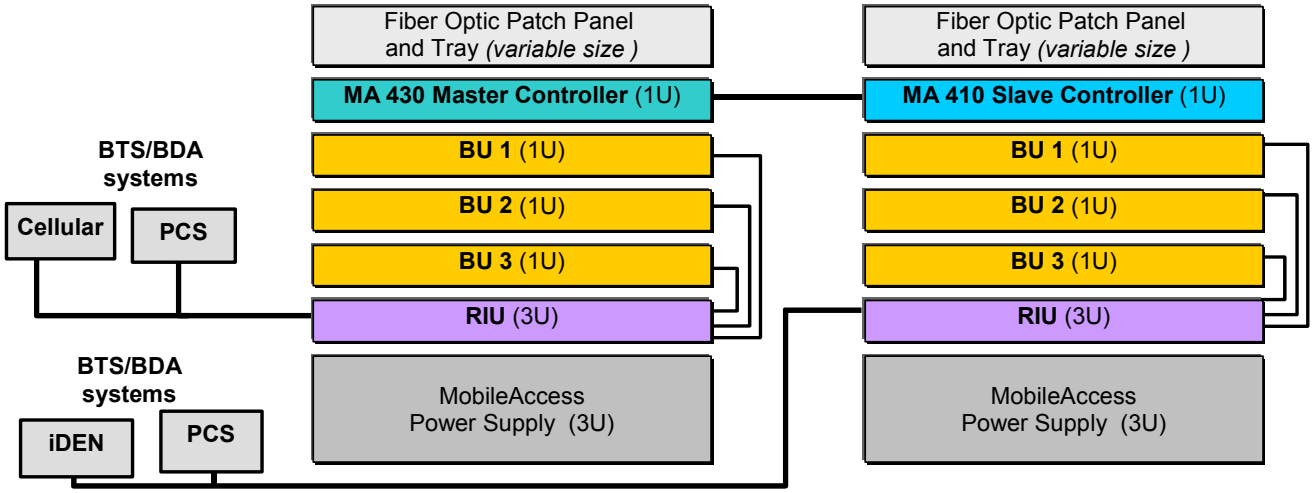

Figure 3-3: Example of Single Building Rack Installation for Two Operators

3.2.2 Multi-Building Rack Installation

Figure 3-4 provides an example of a multi-building solution which distributes three bands over a main site and two remote sites. Each site consists of an **8-floor** building, requiring 8 RCs per building (one on each floor). Each RC will contain **two dual-band RUs**.

The following equipment is required in the main communication room of each building:

- Two BUs – each BU distributes a high-band and low-band signal from a dedicated operator to eight RUs (housed in eight separate RCs – one on each floor).
- One MA 430 controller configured as Master in the Main building, and two MA 410 controllers configured as slaves in the Remote buildings.
- MA 300 Main in the main building, and MA 300 Slave in each of the remote buildings.

The MA 300 units extend the RF signal from the Main to the Remote buildings over a single strand of fiber. Uplink and downlink signal are placed on the single fiber at 1310 and 1550 respectively.

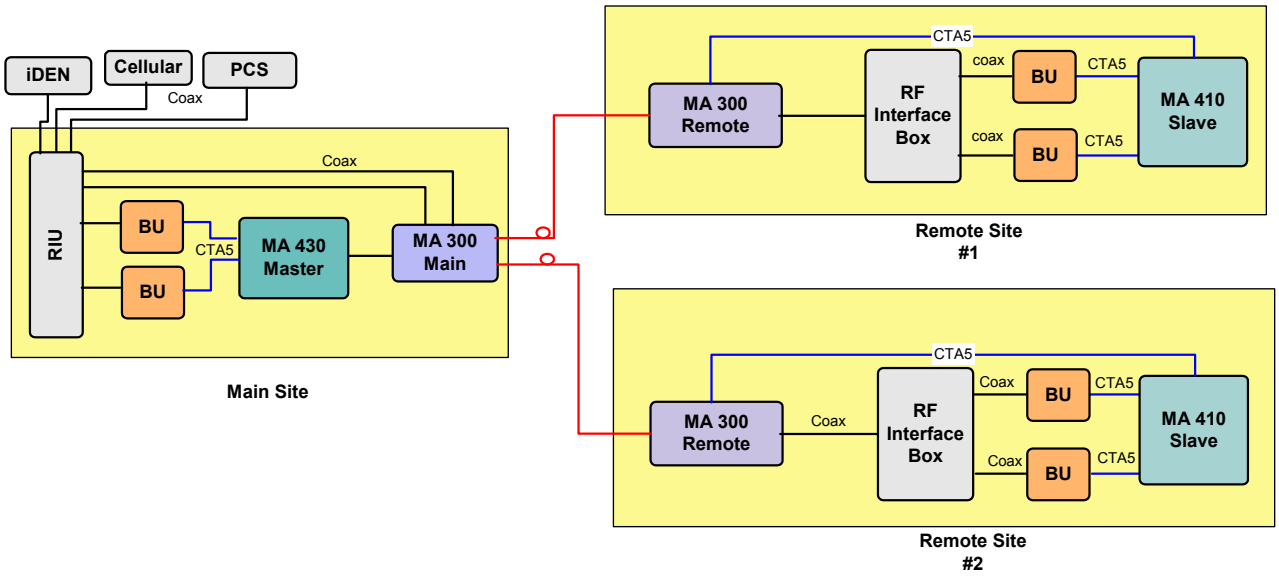

Figure 3-4. Example of Multi-building Topology Communication Room Installation

3.3 Remote Cabinet Installation and Connections

Mount and install the Remote Cabinet (RC) either on the wall in the communication shaft or communication room or in a 19″ rack in the *communication room* allocated to that area (sometimes referred to as a **secondary** communication room).

The procedure varies slightly depending on whether the RC is an *integrated* or *external* power supply model. The following sections describe both procedures.

3.3.1 RC 2000 Wall Mount Installation

ATTENTION: The following instructions apply to an installation on a concrete wall. For any other type of wall, contact MobileAccess.

The wall installation 2000 Remote Cabinet is supplied with a plate that is to be mounted on the wall and a bracket that is assembled on the rear of the MA 2000 system.

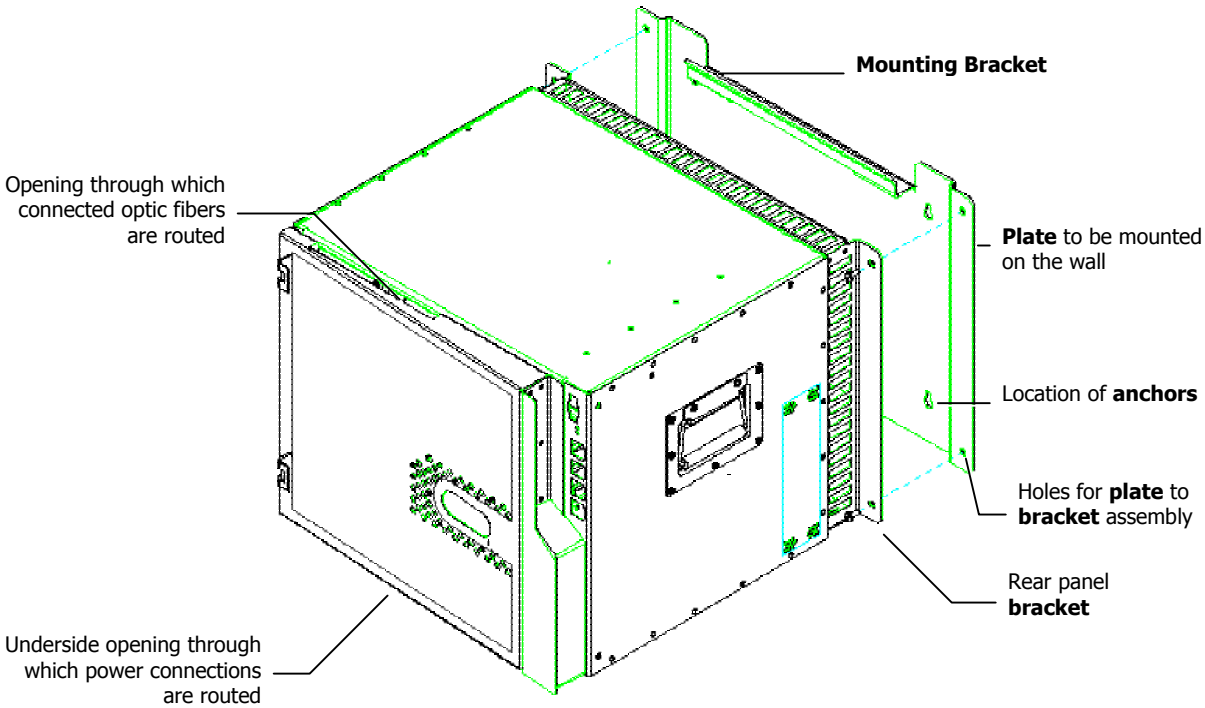

Figure 3-5. MA 2000 System Wall Mount

Mount the RC on the wall as follows:

NOTE: *For installations that include an MA 850 system, refer to section 3.4.*

1. For **integrated power supply** configurations only (for other configuration grounding is optional), connect the cabinet GND according to Wall Mount RC Grounding section 3.3.2.
2. Using the **plate** as a guide, drill four holes for concrete anchors. Insert four concrete anchors (McMaster-Carr catalogue number 92403A200, or equivalent).
3. Mount the **Plate** on the wall. Carefully and thoroughly fasten the anchors to the wall.
4. Assemble the **Bracket** onto the rear of the Remote Cabinet using the supplied screws.
5. Lift the MA 2000 RC and guide the rear ledge of the assembled bracket onto the **plate bracket**.
6. Secure the RC **Bracket** to the **Plate** on the wall, using the four screws.

3.3.2 Wall Mount RC Grounding

NOTE: *This procedure is only necessary for wall mount integration power supply configuration (for other configurations this procedure is optional).*

MA 2000 provides two options for grounding the cabinet:

- At the rear of the unit
- On the power connection panel inside the unit

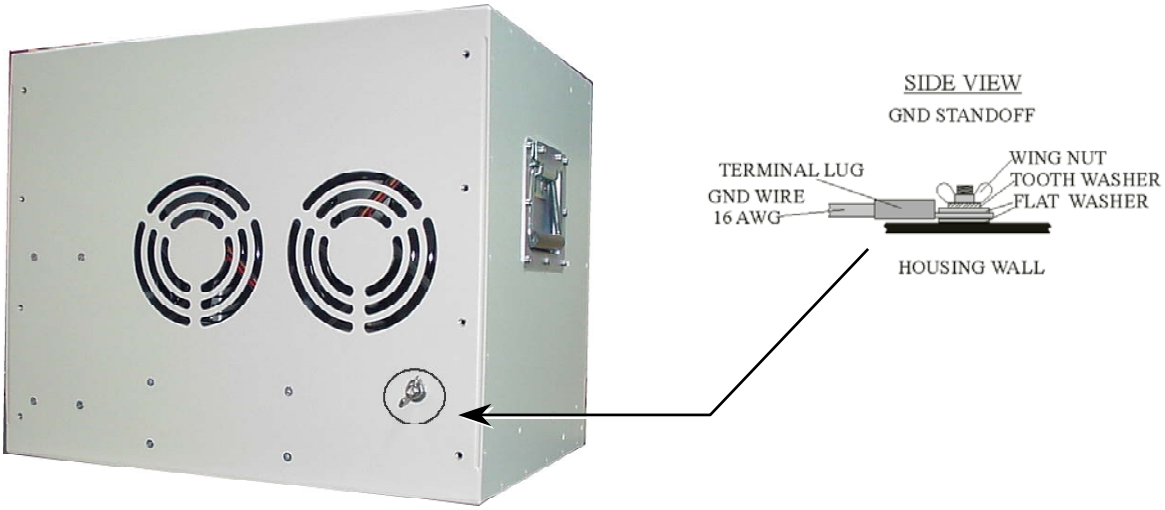

Figure 3-6: Grounding Located at the Rear of the Unit

3.3.3 RC 2000 Rack Mount Installation

The MA 2000 RC Rack Mount model is supplied with the required brackets already assembled to the sides of the cabinet as illustrated in the following figure.

Simply, mount the MA 2000 RC in the rack and secure with the supplied screws.

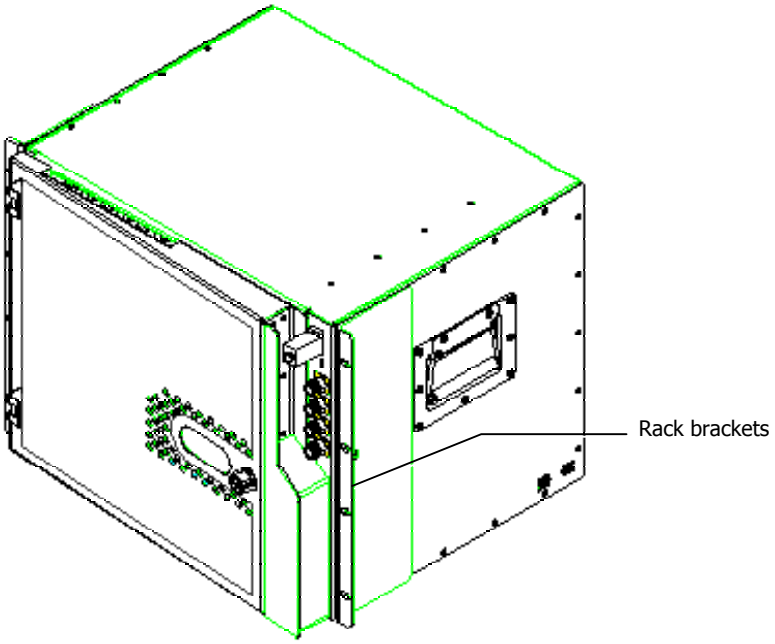

Figure 3-7 . MA 2000 RC Rack Model

3.3.4 Fiber Optic Connections

Connect optical fibers from each BU to the corresponding RU 2000 and route the optic fibers so they will fit through the top opening in the door.

The power and other connections should already be connected.

NOTE: *Keep in mind the rules for handling and connecting F/O cables. The F/O cables will be connected to the associated BU in the communication room at a later phase.*

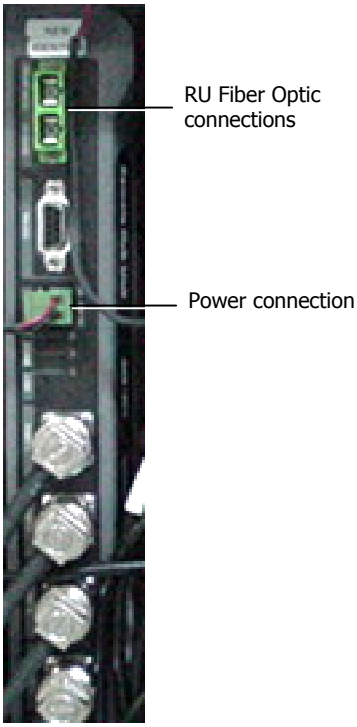

Figure 3-8. RU 2000 Fiber Optic and internal power connections

3.3.5 Power Connections

The power connections vary depending on whether the configuration is for an integrated power supply or for external power supplies.

Integrated Power Supply model

- Connect the AC power connector to the connector on the internal plate as illustrated below. The power source may be: 230 VAC, 115 VAC (an AC/DC converter is built into the chassis).
- You may also connect a **backup battery of 48V** to the battery connector. This is an optional connection.

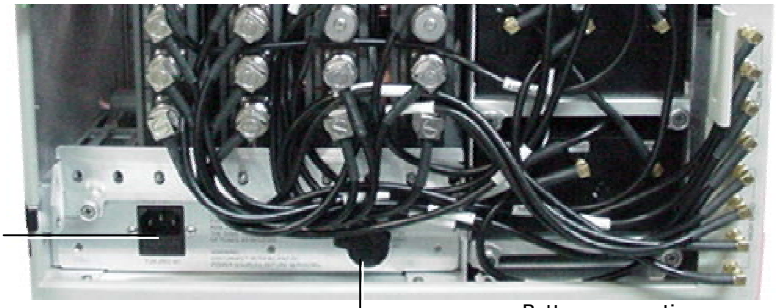

Figure 3-9. Partial View of system illustrating location of power connections

External Power Supplies Model

The external power source may be a central source with cables routed to each RU, or RU dedicated power supplies locally installed.

- PS = 24 VDC to 48 VDC.
- Connect each power connection to the appropriate connector on the remote cabinet.

3.3.6 Antenna Connections

- For systems *without* MA 850 modules - connect the antenna connections to the RC antenna ports;
- For systems with MA 850 modules - refer to MA 850 Installation section 3.4.