MobileAccess 850 (for FCC)

Installation and Configuration Guide

P/N: 709C001103

REV: A00

Date: 06-NOV-06

MobileAccess Ltd. Vienna, Virginia Tel: +1-703-848-0200
http://www.MobileAccess.com

Preface Material

© COPYRIGHT 2006, MOBILEACCESS NETWORKS INC. ALL RIGHTS RESERVED.

MOBILEACCESSTM IS A REGISTERED TRADEMARK OF MOBILEACCESS. THIS DOCUMENT CONTAINS OTHER TRADEMARKS, TRADE NAMES AND SERVICE MARKS OF MOBILEACCESS AND OTHER ORGANIZATIONS, ALL OF WHICH ARE THE PROPERTY OF THEIR RESPECTIVE OWNERS.

THIS DOCUMENT CONTAINS CONFIDENTIAL AND PROPRIETARY INFORMATION OF MOBILEACCESS AND MAY NOT BE COPIED, TRANSMITTED, STORED IN A RETRIEVAL SYSTEM OR REPRODUCED IN ANY FORMAT OR MEDIA, IN WHOLE OR IN PART, WITHOUT THE PRIOR WRITTEN CONSENT OF MOBILEACCESS. INFORMATION CONTAINED IN THIS DOCUMENT SUPERSEDES ANY PREVIOUS MANUALS, GUIDES, SPECIFICATIONS, DATA SHEETS OR OTHER INFORMATION THAT MAY HAVE BEEN PROVIDED OR MADE AVAILABLE TO THE USER.

THIS DOCUMENT IS PROVIDED FOR INFORMATIONAL PURPOSES ONLY, AND MOBILEACCESS DOES NOT WARRANT OR GUARANTEE THE ACCURACY, ADEQUACY, QUALITY, VALIDITY, COMPLETENESS OR SUITABILITY FOR ANY PURPOSE OF THE INFORMATION CONTAINED IN THIS DOCUMENT. MOBILEACCESS RESERVES THE RIGHT TO MAKE UPDATES, IMPROVEMENTS AND ENHANCEMENTS TO THIS DOCUMENT AND THE PRODUCTS TO WHICH IT RELATES AT ANY TIME WITHOUT PRIOR NOTICE TO THE USER. MOBILEACCESS MAKES NO WARRANTIES, EXPRESS OR IMPLIED, INCLUDING, WITHOUT LIMITATION, THOSE OF MERCHANTABILITY AND FITNESS FOR A PARTICULAR PURPOSE, WITH RESPECT TO THIS DOCUMENT OR ANY INFORMATION CONTAINED HEREIN.

Policy for Warrantee and Repair

MobileAccess tests and inspects all its products to verify their quality and reliability. MobileAccess uses every reasonable precaution to ensure that each unit meets their declared specifications before shipment. Customers should advise their incoming inspection, assembly, and test personnel about the precautions required in handling and testing our products. Many of these precautions can be found in this manual.

The products are covered by the following warranties:

General Warranty

MobileAccess warrants to the original purchaser all standard products sold by MobileAccess to be free of defects in material and workmanship for one (1) year from date of shipment from MobileAccess. During the warranty period, MobileAccess will repair or replace any product that MobileAccess proves to be defective. This warranty does not apply to any product that has been subject to alteration, abuse, improper installation or application, accident, electrical or environmental over-stress, negligence in use, storage, transportation or handling.

Specific Product Warranty Instructions

All MobileAccess products are warranted against defects in workmanship, materials and construction, and to no further extent. Any claim for repair or replacement of units found to be defective on incoming inspection by a customer must be made within 30 days of receipt of shipment, or within 30 days of discovery of a defect within the warranty period.

This warranty is the only warranty made by MobileAccess and is in lieu of all other warranties, expressed or implied. MobileAccess sales agents or representatives are not authorized to make commitments on warranty returns.

Returns

In the event that it is necessary to return any product against above warranty, the following procedure shall be followed:

1. Return authorization is to be received from MobileAccess prior to returning any unit. Advise MobileAccess of the model, serial number, and discrepancy. The unit may then be forwarded to MobileAccess, transportation prepaid. Devices returned collect or without authorization may not be accepted.

2. Prior to repair, MobileAccess will advise the customer of our test results and any charges for repairing customer-caused problems or out-of-warranty conditions etc.

3. Repaired products are warranted for the balance of the original warranty period, or at least 90 days from date of shipment.

Limitations of Liabilities

MobileAccess's liability on any claim, of any kind, including negligence for any loss or damage arising from, connected with, or resulting from the purchase order, contract, quotation, or from the performance or breach thereof, or from the design, manufacture, sale, delivery, installation, inspection, operation or use of any equipment covered by or furnished under this contact, shall in no case exceed the purchase price of the device which gives rise to the claim.

EXCEPT AS EXPRESSLY PROVIDED HEREIN, MOBILEACCESS MAKES NO WARRANTY, EXPRESSED OR IMPLIED, WITH RESPECT TO ANY GOODS, PARTS AND SERVICES PROVIDED IN CONNECTION WITH THIS AGREEMENT INCLUDING, BUT NOT LIMITED TO, THE IMPLIED WARRANTIES OF MERCHANTABILITY AND FITNESS FOR A PARTICULAR PURPOSE. MOBILEACCESS SHALL NOT BE LIABLE FOR ANY OTHER DAMAGE INCLUDING, BUT NOT LIMITED TO, INDIRECT, SPECIAL OR CONSEQUENTIAL DAMAGES ARISING OUT OF OR IN CONNECTION WITH FURNISHING OF GOODS, PARTS AND SERVICE HEREUNDER, OR THE PERFORMANCE, USE OF, OR INABILITY TO USE THE GOODS, PARTS AND SERVICE.

Reporting Defects

THE UNITS WERE INSPECTED BEFORE SHIPMENT AND FOUND TO BE FREE OF MECHANICAL AND ELECTRICAL DEFECTS.

EXAMINE THE UNITS FOR ANY DAMAGE THAT MAY HAVE BEEN CAUSED IN TRANSIT. IF DAMAGE IS DISCOVERED, FILE A CLAIM WITH THE FREIGHT CARRIER IMMEDIATELY. NOTIFY MOBILEACCESS AS SOON AS POSSIBLE.

NOTE: KEEP ALL PACKING MATERIAL UNTIL YOU HAVE COMPLETED THE INSPECTION

WARNING: TO COMPLY WITH FCC RF EXPOSURE COMPLIANCE REQUIREMENTS, ANTENNAS USED FOR THIS PRODUCT MUST BE FIXED MOUNTED ON INDOOR PERMANENT STRUCTURES, PROVIDING A SEPARATION DISTANCE OF AT LEAST 20 CM FROM ALL PERSONS DURING NORMAL OPERATION.

WARNING: ANTENNA GAIN SHOULD NOT EXCEED 10 dBi.

WARNING: EACH INDIVIDUAL ANTENNA USED FOR THIS TRANSMITTER MUST BE INSTALLED TO PROVIDE A MINIMUM SEPARATION DISTANCE OF 20 CM OR MORE FROM ALL PERSONS AND MUST NOT BE CO-LOCATED WITH ANY OTHER ANTENNA FOR MEETING RF EXPOSURE REQUIREMENTS.

WARNING: THE DESIGN OF THE ANTENNA INSTALLATION NEEDS TO BE IMPLEMENTED IN SUCH A WAY SO AS TO ENSURE RF RADIATION SAFETY LEVELS AND NON-ENVIRONMENTAL POLLUTION DURING OPERATION.

ATTENTION:

COMPLIANCE WITH RF SAFETY REQUIREMENTS:

MOBILEACCESS™ PRODUCTS HAVE NO INHERENT SIGNIFICANT RF RADIATION.

THE RF LEVEL ON THE DOWN LINK IS VERY LOW AT THE DOWNLINK PORTS. THEREFORE, THERE IS NO DANGEROUS RF RADIATION WHEN THE ANTENNA IS NOT CONNECTED.

Safety

WARNING! To comply with FCC RF exposure compliance requirements, antennas used for this product must be fixed mounted on indoor permanent structures, providing a separation distance of at least 20 cm from all persons during normal operation.

1. Each individual antenna used for this transmitter must be installed to provide a minimum separation distance of 20 cm or more from all persons and must not be co-located with any other antenna for meeting RF exposure requirements.
2. The design of the antenna installation needs to be implemented in such a way so as to ensure RF radiation safety levels and non-environmental pollution during operation.

Compliance with RF safety requirements:

- MobileAccess™ products have no inherent significant RF radiation.
- The RF level on the downlink is very low at the downlink ports. Therefore, there is no dangerous RF radiation when the antenna is not connected.

Certification

MobileAccess products have met the approvals of the following certifying organizations:

ISO 9001:2000 (from March 15, 2004)

FCC Certification

For US: FCC 47 CFT part 15 for 802.11b/g

Per section 15.204B.

ID:OJFMA850 will only be supplied as complete system per section 15.204(b) of rules.

FCC certification for MA 850 is valid for use only with the following elements:

Antenna types: section 2.4.1 in this User Guide

AP Types: section 2.5 in the User Guide

NOTE: This equipment has been tested and found to comply with the limits for a Class B digital device, pursuant to Part 15 of the FCC Rules. These limits are designed to provide reasonable protection against harmful interference in a residential installation. This equipment generates, uses and can radiate radio frequency energy and, if not installed and used in accordance with the instructions, may cause harmful interference to radio communications. However, there is no guarantee that interference will not occur in a particular installation. If this equipment does cause harmful interference to radio or television reception, which can be determined by turning the equipment off and on, the user is encouraged to try to correct the interference by one or more of the following measures:

- Reorient or relocate the receiving antenna.
- Increase the separation between the equipment and receiver.
- Connect the equipment into an outlet on a circuit different from that to which the receiver is connected.
- Consult the dealer or an experienced radio/TV technician for help.

WARNING! Changes or modifications to this equipment not expressly approved by the party responsible for compliance MobileAccess Ltd. could void the user's authority to operate the equipment.

Professional Installation of Transmitter

According to FCC 15.203, if an intentional radiator has a standard antenna connector, it must be professionally installed according to FCC 15.203 regulations:

1. The MA850 cannot be sold to the general public. Only professional installer, qualified ("licensed") by MobileAccess for this purpose is aloud to install the MA850.
2. The installation must be controlled and follow the requirement of "Installation Manual" (P/N:709C001103). Each potential installer must receive special training, which is a condition for receiving the license from MobileAccess Inc to become a "licensed" installer. The installation procedure as described in the "Installation Manual" includes the mechanical installation and initial setup by a PC based tool.
3. The intended application of the system is exclusively for the commercial/industry use.

About This Guide

This user guide provides all the information necessary to install and configure the MobileAccess MA 850.

Revision History

The revision history for this document is shown in Table 1-1.

Table 1-1: Revision history

P/N and REV	Date	Description

List of Acronyms

AGC	Automatic Gain Control
BDA	Bi-Directional Amplifier
BU	Base Unit
DL	Downlink
RHU	Remote Hub Unit
SNR	Signal to Noise Ratio
UL	Uplink
VDC	Volts Direct Current
AP	Access Point

Table of Contents

Preface Material ..... **III**

Policy for Warrantee and Repair IV
Certification VI
Professional Installation of Transmitter VII
About This Guide VIII
Revision History VIII
List of Acronyms IX
Table of Contents X

Introduction to the MA 850 System **1**

1.1 About MobileAccess MA 850 1
1.1.1 MA 850 Features and Capabilities 2
1.2 MA 850 Front and Rear Panels 3
1.2.1 Front Panel Connections and LEDs 3
1.2.2 Rear Panel Port Connections and LEDs 4
1.3 Unit Architecture 5
1.4 Installation Configurations 5
1.4.1 Standalone 6
1.4.2 Add-On to MA 1000 RHU 6
1.4.3 Add-on to MA 2000 System 7
1.5 Signal Distribution in the MA 850 8
1.6 Commissioning and Monitoring 8

Infrastructure Preparation **9**

2.1 Installation Requirements 9
2.2 Coaxial Cable Connections 10
2.2.1 General Cable Installation Procedures 10
2.2.2 RF Rules 10
2.3 Power Consumption, Connections and Power Supplies 11
2.3.1 Power Safety Instructions 11
2.3.2 MA 850 Power Consumption 11
2.3.3 Types of Power Supplies 11

2.3.4 Power Connections 11
2.4 In-building Antennas 12
2.4.1 Antenna Types 12
2.4.2 Antenna Connections 12
2.5 Access Points 13

Installation 14

3.1 Accessory Kits 14
3.2 Placing the Unit and Recording Location 15
3.3 Standalone Wall Mount Installation 15
3.4 Add-on to an MA 1000 System Installation 16
3.5 Add-on to an MA 1000 with MA 1200 19
3.6 Add-on to an MA 2000 System 22
3.6.1 MA 850 RC 2000 Assembly 22
3.6.2 MA 850 Rack Mount 24
3.6.3 MA 850 Wall Mount Installation 24

Configuration and Management 25

4.1 Local Configuration and Monitoring 26
4.1.1 Getting Started 26
4.1.2 MA 850 Customer Tool Window Description 27
4.1.3 Configuration Using MA 850 Customer Tool 28
4.1.4 Monitoring Using MA 850 Customer Tool 28
4.2 Remote - Web Browser Session 29
4.2.1 IP Configuration Procedure 30
4.2.1.1 Connecting to the Network 30
4.2.1.2 Performing Auto-Discovery 30
4.2.1.3 Assigning a Static IP Address 31
4.2.1.4 Configuring the SNMP Parameters 34
4.2.1.5 Configuring Serial Parameters 36
4.2.2 Login and User Levels 37
4.2.3 MA 850 View 38
4.3 Gain Setting 39
4.4 Monitoring Alarms 40

SNMP Management Using Any Standard SNMP Manager 41

5.1 Traps List 41

Specifications.....43

1

Introduction to the MA 850 System

This chapter provides a description of the MA 850 system, its architecture, installation configurations, operation and required commissioning procedures.

1.1 About MobileAccess MA 850

Figure 1-1. MobileAccess 850

The MA-850 Wi-Fi Module enables 802.11b/g Wi-Fi signals to be combined with other wireless services for simultaneous distribution over the MobileAccess Universal Wireless Network. It can be deployed in a stand-alone mode, for distribution of Wi-Fi only, or it can be connected to other MobileAccess elements (MA-1000/2000) to deliver Wi-Fi along with other wireless services including cellular/PCS, public safety, and WMTS.

Unlike traditional Wi-Fi deployments, where 802.11 Access Points (APs) are installed on ceilings and walls throughout the facility, the MA-850 enables organizations to cluster their 802.11 APs together in secure telecom closets. With the clustering approach, IT managers can more easily access APs, which ultimately reduces the operational costs of managing the Wi-Fi network and minimizes disruption within the facility.

1.1.1 MA 850 Features and Capabilities

- **Multi-use infrastructure:**

  The same cables and antennas used for Wi-Fi can be used to support the simultaneous extension and distribution of other wireless voice and data services, as follows:

  - Support for four 802.11b/g AP ports
  - Mobile services from MobileAccess 1000/2000, ModuLite or Litenna remote units
- **Simple installation and maintenance:**
  - All active elements are in the telecom shaft or closet
  - All data and voice services distributed via a common coax cabling and broadband antennas
  - AP Clustering - 802.11 access points (APs) connect to the MA 850 in telecom closets
- **Scalable:** Additional APs connected as needed to the MA 850
- **Management:**
  - Robust system management - Familiar SNMP-based management provides proactive visibility and control of the MA 850 based Wi-Fi infrastructure.
  - Management through local RS232 connection and remote WEB management
- **WI-Fi applications transparency** - The MA 850 uses discrete, passive antennas to radiate 802.11 signals, providing a coverage architecture that replicates the behaviors necessary to transparently support advanced AP features and location-sensitive Wi-Fi applications.
- **High-power -** With integral constant gain amplifiers combined with its low-loss architecture, the MA 850 offers scalable support for demanding applications such as wireless VoIP

1.2 MA 850 Front and Rear Panels

This section describes the MA 850 front- and rear-panel connections and LEDs.

1.2.1 Front Panel Connections and LEDs

The front panel contains the antenna connections and mobile services connections, power and local setup connections. The following figure shows the MA 850 front panel.

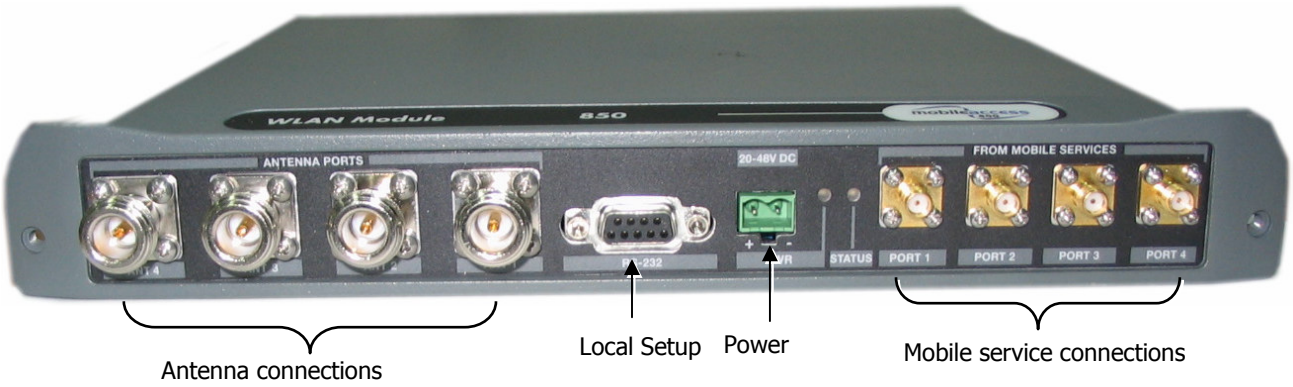

Figure 1-2. MobileAccess 850 Front View

Front Panel Ports

The following table describes the front panel ports.

Front Panel Ports	Description
Antenna Ports	Four n-type female antenna connections
Mobile Services	Four SMA female connections used in installations that integrate MA 850 with MA 1000 RHUs or MA 2000 services. ***NOTE:*** *To be terminated with 50 ohm terminations when not in use.*
Local	RS232 connection for local setup (see section 4.1).
DC	Power connection: 20V to 48V (see 2.3.3)

Front Panel LEDs

The front panel contains two LEDs, described in the following table.

Front Panel LEDs	Description
Run	Internal operation and channel operation status: ○ Green blinking – unit OK ○ Off – fault detected in unit ○ Red blinking – failure of one of the channels
PWR	(Unlabeled LED adjacent to the power connection). Green – Power OK.

1.2.2 Rear Panel Port Connections and LEDs

The rear panel contains the 802.11b/g AP connections, Ethernet connection for remote management and antenna sensing connector.

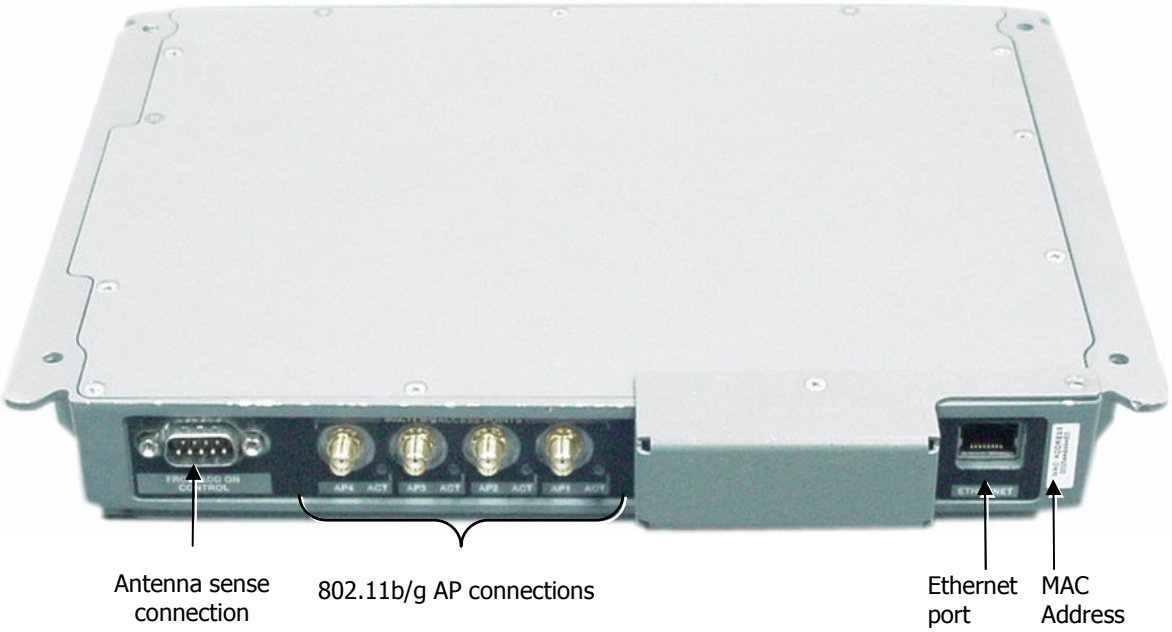

Figure 1-3. MobileAccess 850 Rear View

Rear Panel Ports

The following table describes the rear panel ports.

Rear Panel Ports	Description
802.11b/g APs	Four 802.11b/g connections. (See LED descriptions in the following table). ***NOTE:*** *To be terminated with 50 ohm terminations when not in use.*
Connection to control	Relevant only when installed as part of a MA 1000 system. Connects to RHU 1000 rear panel Control connector. Routes the antenna sensing (indication of whether antenna is present) to the RHU for monitoring via the management application. (RHU Version 3.1 and higher).
Ethernet port	Connection to network for configuration and management through a WEB browser. *The default IP Address is on the label near the port.*

Rear Panel 802.11 b/g AP LEDs

The rear panel LEDs indicate connection point of corresponding 802.11b/g AP.

Rear Panel LEDs	Description
Blinking green	AP connected and working.
Red	Corresponding AP is not connected or does not transmit.

1.3 Unit Architecture

MA 850 consists of the following main *functional* modules:

- **Interface:** Provides interface to the 802.11b/g AP ports.
- **Gain control mechanism:** Gain control to adjust 802.11b/g signals to specific site
- **Combining and separating mechanism:** On the downlink, combines the amplified 802.11b/g signals with the 802.11a AP signals and those of mobile services. On the uplink, separates the signals and routes them to the corresponding ports.
- **Monitoring and control:** Support for WEB monitoring, SNMP MIBs displayed via a standard Web browser and local RS232 and service options.

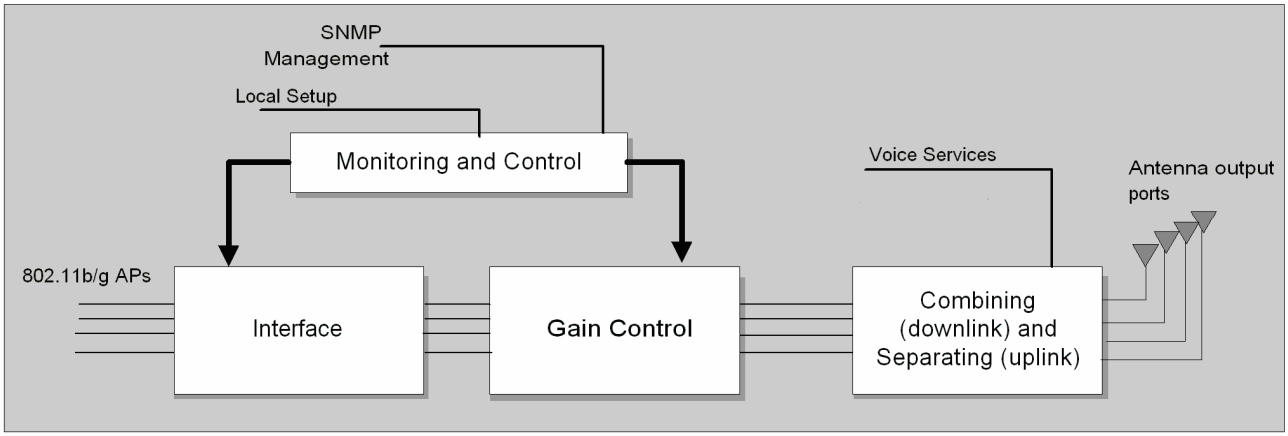

Figure 1-4. MobileAccess 850 Functional Block Diagram

1.4 Installation Configurations

MA 850 can be installed in the following configurations:

- Standalone – to provide coverage for 802.11b/g services only
- Add-on to a MobileAccess 1000 series RHU (with and without MA 1200 add-on)
- Add-on to MobileAccess 2000 system

NOTE: In all installation types, all the signals are converged via the MA 850 and distributed via the antennas connected to the **MA 850** antenna ports.

1.4.1 Standalone

In this type of installation configuration, MA 850 distributes only 802.11b/g services over the connected antenna infrastructure.

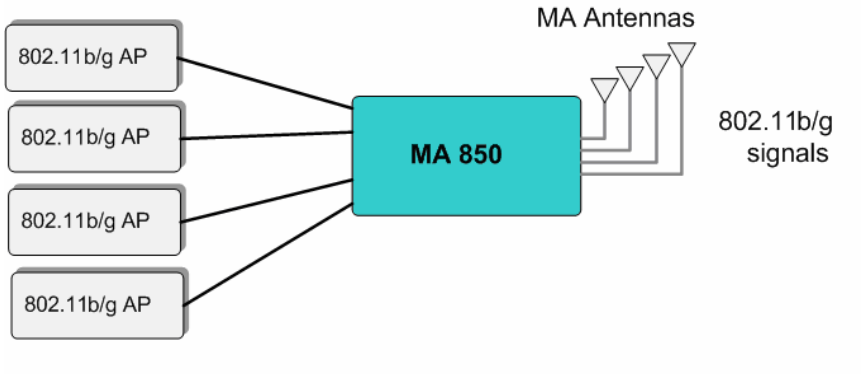

Figure 1-5. MA 850 Standalone Installation Configuration

1.4.2 Add-On to MA 1000 RHU

The MA 850 can be installed as an add-on unit to a MA 1000 RHU. In this type of installation, the **MA 1000 RHU services** are routed to the **MA 850 inputs** where they are integrated with the MA 850 Wi-Fi data services and routed to the MA 850 antenna ports for distribution over a single coax broadband antenna infrastructure.

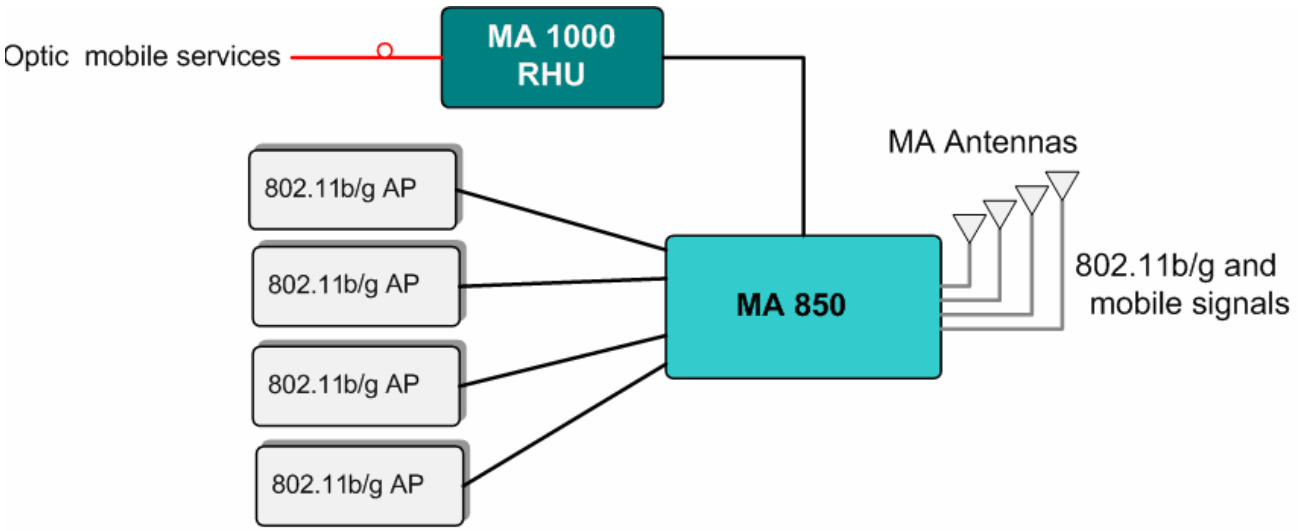

Figure 1-6 MA 850 as Add-On to MA 1000 System

1.4.3 Add-on to MA 2000 System

The MA 850 can be installed as an (external) add-on unit to the MA 2000 system. In this type of installation, the combined MA 2000 services are routed to the MA 850 inputs where they are integrated with the MA 850 Wi-Fi data services and, through the MA 850 antenna connections, distributed through the same coax broadband antenna infrastructure.

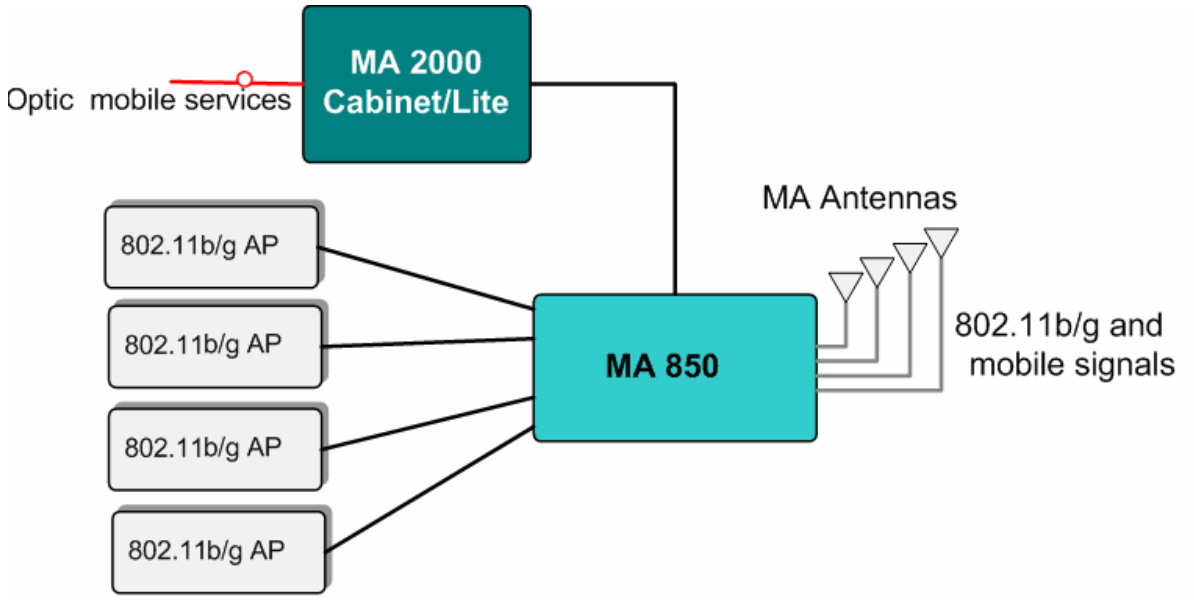

Figure 1-7. MA 850 Add-On to MA 2000 System

1.5 Signal Distribution in the MA 850

The MA 850 distributes the 802.11b/g signals from each AP port to the corresponding antenna port. For example, the signals from an AP connected to MA 850 **b/g-1** are routed to **antenna-1**; signals from an AP connected to MA 850 **b/g-2** are routed to **antenna-2**, etc.

Note: Mobile services (in installations where MA 850 units are integrated into MA 1000/2000 installations), the mobile services are distributed over the antenna ports corresponding to the SMA connection ports.

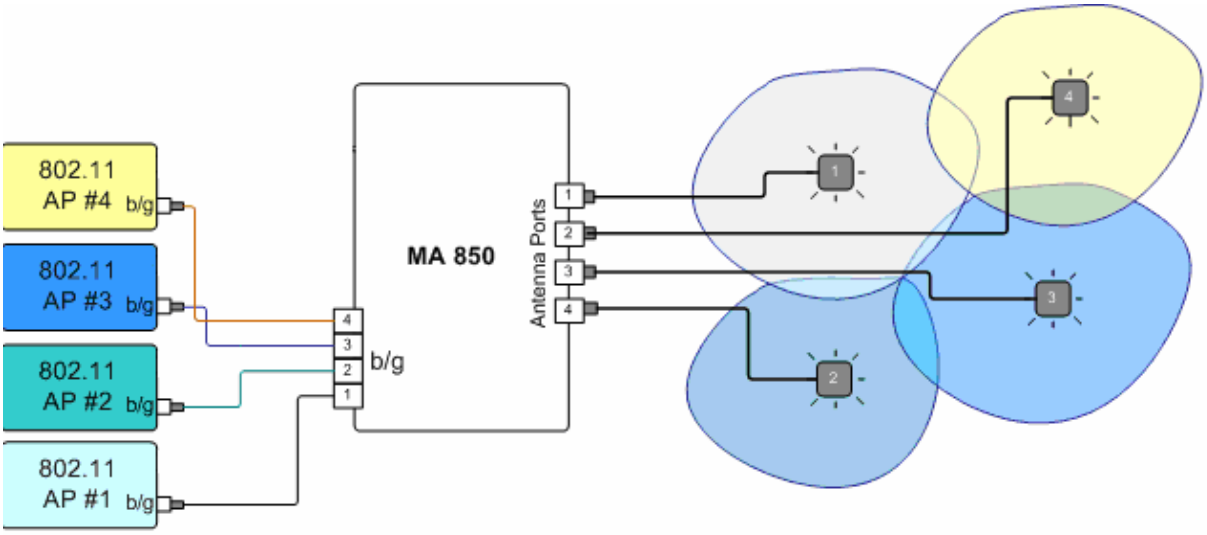

Figure 1-8. Example of 802.11 Signal Distribution

1.6 Commissioning and Monitoring

MA 850 requires no local commissioning. The unit is assigned a default IP address (labeled on its network port) which can be remotely redefined using the procedure in section 4.2.1. No other setup procedure is required: after the unit ports and cables are connected, the unit can be remotely accessed for monitoring and management.

In addition, MA 850 provides MIBs that enables viewing traps and configuring the unit through standard SNMP (Version 2.0) managers such as HP OpenView (see Chapter 5).

NOTE: MA service personnel can perform setup procedures on the MA 850, through a connection from a computer running the Configuration Tool application supplied by MA.

2

Infrastructure Preparation

This chapter contains information on the cabling and power requirements for the MA 850 system, as well as the antenna types and access points that can be used.

2.1 Installation Requirements

The infrastructure preparation consists of two main phases:

1. **Floor Planning:** Planning the distribution of the antennas on each floor to provide the required coverage. This phase varies depending on whether the coverage is only for WLAN or includes voice coverage through the existing infrastructure:
   - For voice and WLAN **802.11b/g** coverage- Use only antennas listed in section 2.4.1 table I
2. **Telecom Closet Planning:** Planning the layout of the devices and cables in the telecom closet or shaft. This includes the MA 850, 802.11 Access Points, cabling and other voice service distribution systems such as MA 1000/2000 that are relevant to the specific installation.

2.2 Coaxial Cable Connections

2.2.1 General Cable Installation Procedures

- Observe the general cable installation procedures in accordance with the building codes in your area.
- The building code requires that all cabling be installed above ceiling level (where applicable). Each length of cable from the risers to each antenna must be concealed above ceiling.
- The cable must be properly supported and maintained straight. This is done either by using tie wraps or cable trays and clamps or hangers every 10 feet (where practical above ceiling level). Where this is not obtainable, the following should be observed:
  - The minimum bending radius of the supplied ½" coax cable should be 7".
  - Cable that is kinked or has a bending radius smaller than 7" must be replaced.
  - Cable runs that span less than two floors should be secured to mechanical structures that are suitably located.
- The cables should be supported only from the building structure.

2.2.2 RF Rules

- Use coax ½", 50ohm, male-to-male N-type, (6-7dB for 1Ghz, 11dB for 2Ghz) for connecting to RHU and RHU ports.
- Use coax RG223, 50ohm, male-to-male N-type for RF connections from the BUs to the BTS/RBS and to the RIU.
- When using the MobileAccess™ system in an environment in which other indoor coverage systems are installed, it is recommended (where possible) that the antennas are placed at least two meters apart
- When bending coax cables, verify that the bending radius does not exceed the coax specifications.
- Use only antennas listed in section 2.4.1.
- Use a VSWR meter (i.e. Site Master or equivalent) for checking coax cables, including the antennas. (<2). The VSWR must be measured prior to terminating the RHUs in the remote communication rooms
- Terminate all unused **MA 850** ports with a 50 ohm load

2.3 Power Consumption, Connections and Power Supplies

2.3.1 Power Safety Instructions

SAFETY WARNINGS

When installing or selecting the power supplies:

1. Be sure to disconnect all power sources before servicing.
2. Calculate the required power according to the requirements of the specific installation and then determine the configuration of the power supplies. The required DC cables will then be determined by the selected PS configuration.
3. Use only UL approved power supplies
4. AC and DC power supply cables – use only the power cords supplied with the units

2.3.2 MA 850 Power Consumption

Table 2-1. MobileAccess™ Power Requirements

Unit Type	Voltage Input	Typical Power Consumption	Current Consumption
MA 850	20 to 48VDC	20W	1.0 A (max)

2.3.3 Types of Power Supplies

NOTE: Use only UL approved power supplies with SELV outputs.

Table 2-2: MobileAccess™ Power Supplies

Power Supply	
LPS-48V-66W	Local AC/DC Converter 66W

2.3.4 Power Connections

The power connections vary according to the MA 850 installation topology. The following power supplies are recommended for local power configuration, where p*ower can also be supplied using remote power supply configurations*.

- Use a dedicated power supply (i.e. LPS-48-66W – refer to the Power Supplies Manual) for the following installations:
  - MA 850 standalone
  - Combined with ModuLite MRC or 2000 Cabinet/Lite
- LPS-48-100W (recommended)
  - Combined with the MA 1000 RHU – feeds both modules

2.4 In-building Antennas

The in-building antennas are connected to the coaxial cable distribution system by jumper cables at various points. The antennas will be mounted on the ceiling tiles and should be exposed. All in-building antenna installations will be such that it will not interfere with indoor traffic and will not enable any person to touch the antennas.

- Wideband antennas omni – up to 2.5GHz to support 802.11b/g. Use any of the antennas listed in section 2.4.1
- 50 ohm impedance

2.4.1 Antenna Types

Table 2-3. Antennas to be used for 802.11b/g

Vendor	Catalog number	Gain [dBi]
Huber+Suhner	SWA 0859/360/4/10/V	7 dBi
Mars Antennas	MA-CM36-15	2 low band 3-4 high band 5 WLAN 802.11b
Cellwave	A08818DC00-28T0	2.1
Antenna Specialists	ASP-3561	2

2.4.2 Antenna Connections

NOTE: If the MobileAccess 850 is operated without cellular service, it is required to connect **50Ω termination** points to each of the remote connectors in the unit. A 50 Ω termination is also required on each unused AP port.

- 50 Ω, 1/2" or 3/8" Plenum coax cables
- Max cable length (typically): 150'
- 50 ohm terminator on unused connections
- For short jumpers (to MRC antenna ports): RG223 2 ft or 10 ft male-to-male coax jumpers

2.5 Access Points

NOTE: If the MobileAccess 850 is operated without cellular service, it is required to connect **50Ω termination** points to each of the remote connectors in the unit. A 50 **Ω** termination is also required on each unused AP port.

The following vendor Access Points have been verified and FCC approved.

Table 2-4. Approved Access Points

Configuration FCC-ID	**Vendor**	**Catalog number**	**Vendor FCC-ID**
OJFMA850	Cisco	AIR-AP1231G-A-K9 802.11b/g	LDK102042
OJFMA850A	Cisco	AIR-RM22A-A-K9 802.11a	LDK102053
OJFMA850C	Colubris	MAP-320	NKRCM9

3

Installation

This chapter contains the installation and connection procedures for various installation configurations. MA 850 may be installed in the following configurations:

- Wall mount standalone – mounted directly on the wall with four screws
- Mounted onto an MA 1000 RHU
- Mount as add-on to an MA 1000 RHU with an MA 1200 add-on unit
- Add-on to a MA 2000 system

3.1 Accessory Kits

Verify that the supplied accessory kit corresponds to your installation. The accessory kits include a bracket, the required cables and accessories.

AK-850-1000	Accessory kit for 850 with 1000
AK-850-1200	Accessory kit for 850 with 1200
AK-850-MDLT	Accessory kit for 850 with Modulite
AK-850-2000	Accessory kit for 850 with 2000
AK-850-SA	Accessory kit for 850 stand alone

3.2 Placing the Unit and Recording Location

MobileAccess 850 is typically installed in the communication shaft or cabinet of each floor to which WLAN coverage is to be supported. The accessories, mounting and installation procedures vary depending on the installation configuration.

NOTE: It is recommended to record the location of the units according to the MAC addresses on the sticker at the rear of the units near the Ethernet port.

3.3 Standalone Wall Mount Installation

NOTE: Although it is not required for a stand-alone installation, it is recommended to set the supplied cable **705102101** aside (usually used when MA 850 is installed in an add-on configuration).You will need it if you want to upgrade your system to provide additional coverage options.

To install MA 850 wallmount standalone configuration

ATTENTION

Use SMA wrench for the SMA connectors, do not over tighten the connectors.

1. Mount the MA 850 on the wall using four screws. When mounting, consider the following:
   - The type of screws used to mount the unit must suit the type of wall construction (cement, bricks, etc.) so that the mount is secure.
   - The position of the APs and required cable connections.
2. Connect the **power**. It is recommended to use the following power supply for local power configuration, where p*ower can also be supplied using remote power supply configurations*:
   - Dedicated power supply (i.e. LPS-48-66W – refer to the Power Supplies Manual)
3. Connect the 802.11b/g Access Points to the corresponding ports on the MA 850 rear panel. Refer to section 1.5 for a description of the connections and distribution patterns.

   NOTE: It is recommended to RESET the unit by removing and reinserting the power connector on the front panel after connecting the APs.

4. Connect the coax **antenna** cables to the MA 850 unit antenna ports on the MA 850 front panel according to the following instructions:
   - Use 50 Ω, N-type male to male, 1/2” or 3/8” Plenum coax cables
   - Max cable length (typically): 150’
5. Fit 50 ohm terminators on all unconnected SMA, AP and antenna ports.

6. Connect the network connection to the MA 850 rear panel network port.

NOTE 1: Each unit is pre-assigned an IP address. The address can be modified anytime through a remote connection according to the procedure described in section 4.2.1).
NOTE 2: It is recommended to record the location of the units according to the MAC addresses on the sticker at the rear of the units near the Ethernet port.

3.4 Add-on to an MA 1000 System Installation

In this type of installation, the MA 850 and MA 1000 RHU are assembled together with a *bracket* between them.

NOTE: It is recommended to mount the MA 850 to the wall, and the MA 1000 on top of the MA 850 (with a bracket between them). However, if a previous MA 1000 RHU is present, you may install the MA850 on top of the existing MA 1000 RHU (with a bracket between them.)

To assemble an RHU 1000 onto an MA 850

1. Assemble the supplied bracket to the top of the MA 850, where the notched side of the bracket is towards the rear of the unit. Secure the bracket to the MA 850 unit using the four supplied screws.

Figure 3-1. MA 850 and Bracket Assembly

2. Mount the MA 850 and bracket assembly to the wall. When mounting, consider the following:
   - The type of screws used to mount the unit must suit the type of wall construction (cement, bricks, etc.) so that the mount is secure.
   - The position of the APs and required cable connections.
3. Mount the MA 1000 RHU to the bracket using the four provided screws.
4. For antenna sensing support (RHU 1000 version 3.1 and higher), connect between the **Control** connectors at the rear of both units using cable **705102101.**

NOTE: For antenna sensing support in RHU 1000 version 3.0 and lower, upgrade to a higher version according to the *MA 850 Upgrade Procedure Guide.*

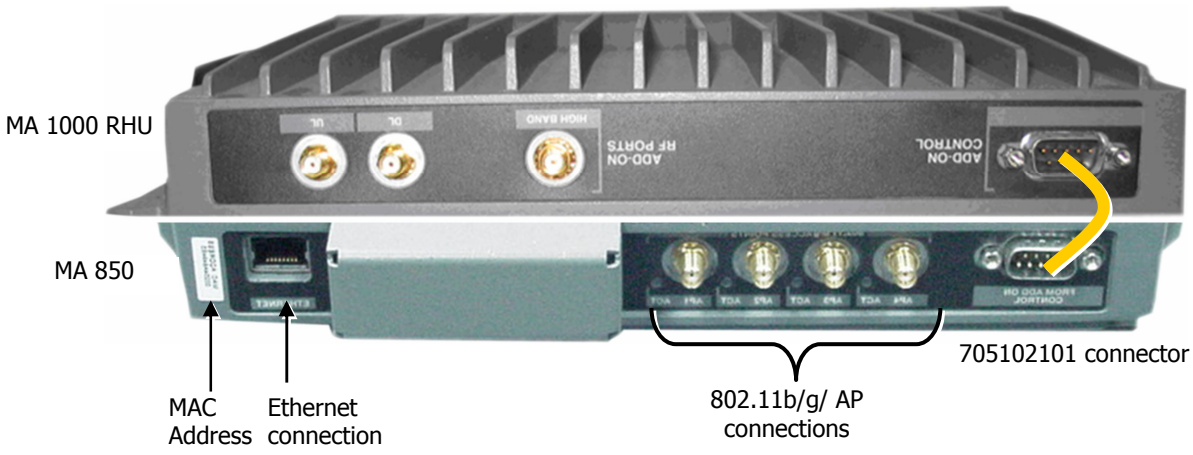

5. Connect the 802.11b/g Access Points to the corresponding ports on the MA 850 rear panel. Refer to section 1.5 for a description of the connections and distribution patterns.

NOTE: It is recommended to RESET the unit by removing and reinserting the power connector on the front panel after connecting the APs.

6. Connect the network connection to the MA 850 rear panel network port.

NOTE 1: Each unit is pre-assigned an IP address. The address can be modified anytime through a remote connection according to the procedure described in section 4.2.1).
NOTE 2: It is recommended to record the location of the units according to the MAC addresses on the sticker at the rear of the units near the Ethernet port.

7. Connect the **MA 1000 antenna** ports and the **MA 850 Mobile Services** ports using the four SMA to N-type cables *supplied in the accessory kit*.

NOTE: Be sure the connectors are closed at a 45 degree angle so as not to place stress on the cables.

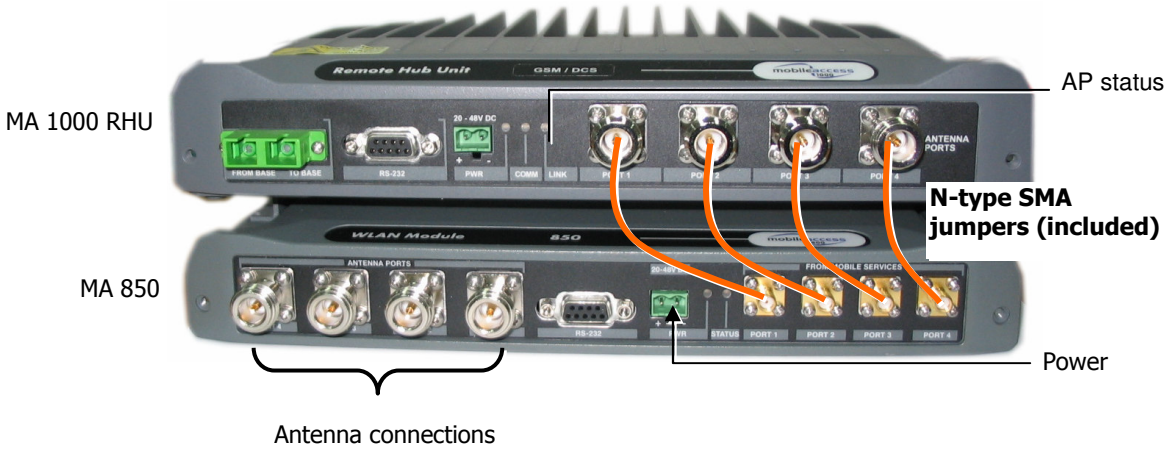

8. Connect the **power.** It is recommended to use the following power supply for local power configuration, where p*ower can also be supplied using remote power supply configurations*:
   - Dedicated power supply (i.e. LPS-48-100W which feeds both modules). Refer to the Power Supplies Manual.
9. Connect the coax **antenna** cables to the MA 850 unit antenna ports on the MA 850 front panel according to the following instructions:
   - Use 50 Ω, N-type male to male, 1/2" or 3/8" Plenum coax cables
   - Max cable length (typically): 150'
10. Fit 50 ohm terminators on all unconnected SMA, AP and antenna ports.

3.5 Add-on to an MA 1000 with MA 1200

In this type of installation, the MA 850 and MA 1000/1200 assembly are separated by a bracket.

NOTE: It is recommended to mount the MA 850 to the wall, and the MA 10001200 assembly on top of the MA 850 (with a bracket between them). However, if a previous MA 1000/1200 assembly exists, you may install the MA850 on top of the existing assembly, (with a bracket between them.)

To assemble an RHU 1000 onto an MA 850

1. Assemble the supplied bracket to the top of the MA 850, where the notched side of the bracket is towards the rear of the unit. Secure the bracket to the MA 850 unit using the four supplied screws.

Figure 3-2. MA 850 and Bracket Assembly

2. Mount the MA 850 and bracket assembly to the wall. When mounting, consider the following:
   - The type of screws used to mount the unit must suit the type of wall construction (cement, bricks, etc.) so that the mount is secure.
   - The position of the APs and required cable connections.
3. Assemble the MA 1000/1200 assembly to the 850 bracket.
4. For antenna sensing support (RHU 1000 version 3.1 and higher), connect between the **Control** connectors at the rear of both units using cable **705102101.**

NOTE: For antenna sensing support in RHU 1000 version 3.0 and lower, upgrade to a higher version according to the *MA 850 Upgrade Procedure Guide.*

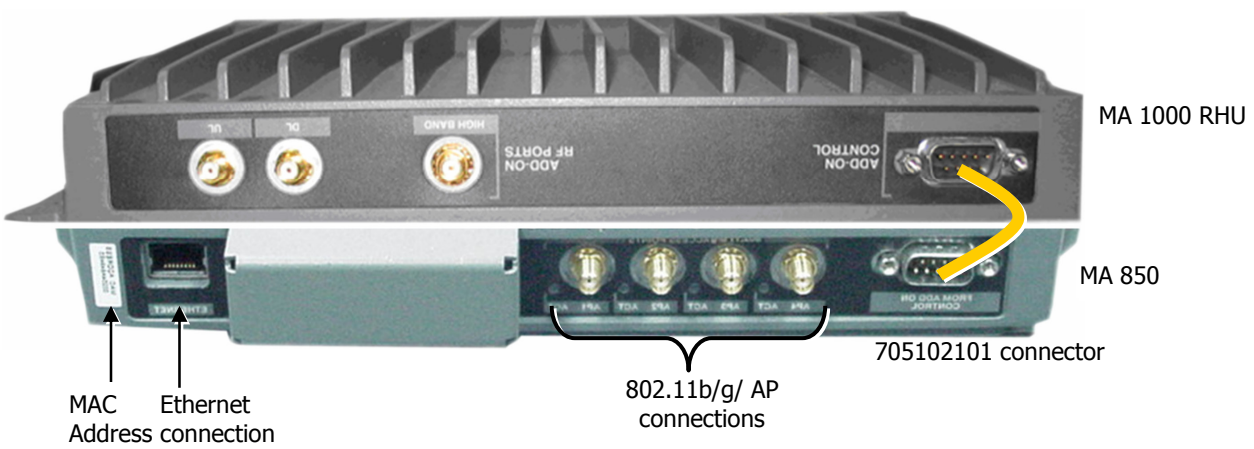

5. Connect the 802.11b/g Access Points to the corresponding ports on the MA 850 rear panel. Refer to section 1.5 for a description of the connections and distribution patterns.

NOTE: It is recommended to RESET the unit by removing and reinserting the power connector on the front panel after connecting the APs.

6. Connect the network connection to the MA 850 rear panel network port.

NOTE 1: Each unit is pre-assigned an IP address. The address can be modified anytime through a remote connection according to the procedure described in section 4.2.1).
NOTE 2: It is recommended to record the location of the units according to the MAC addresses on the sticker at the rear of the units near the Ethernet port.

7. Connect the **MA 1000 antenna** ports and the **MA 850 Mobile Services** ports using the four SMA to N-type cables *supplied in the accessory kit*.

NOTE: Be sure the connectors are closed at a 45 degree angle so as not to place stress on the cables.

Figure 3-3. Connection of MA 850 and MA 1000 Service Ports

8. Connect the **power.** It is recommended to use the following power supply for local power configuration, where p*ower can also be supplied using remote power supply configurations*:
   - Dedicated power supply (i.e. LPS-48-100W which feeds both modules). Refer to the Power Supplies Manual.
9. Connect the coax **antenna** cables to the MA 850 unit antenna ports on the MA 850 front panel according to the following instructions:
   - Use 50 Ω, N-type male to male, 1/2" or 3/8" Plenum coax cables
   - Max cable length (typically): 150'
10. Fit 50 ohm terminators on all unconnected SMA, AP and antenna ports.

3.6 Add-on to an MA 2000 System

MA 850 may be integrated into the MA 2000 system using one of the following installations:

- Installing it directly on the MA 2000 RC top panel (using the supplied plate);
- Mounting it on a rack (using the supplied plate);
- Wall-mount near the MA 2000 cabinet.

NOTE: The coax outputs of the cabinet are connected to the appropriate ports on the MA 850 and the **antennas are connected directly to the MA 850 module.**

3.6.1 MA 850 RC 2000 Assembly

1. Assemble two side brackets to the plate sides as illustrated in Figure 3-4.
2. Assemble the MA 850 module to the supplied bracket using the four screws and washers as illustrated below.

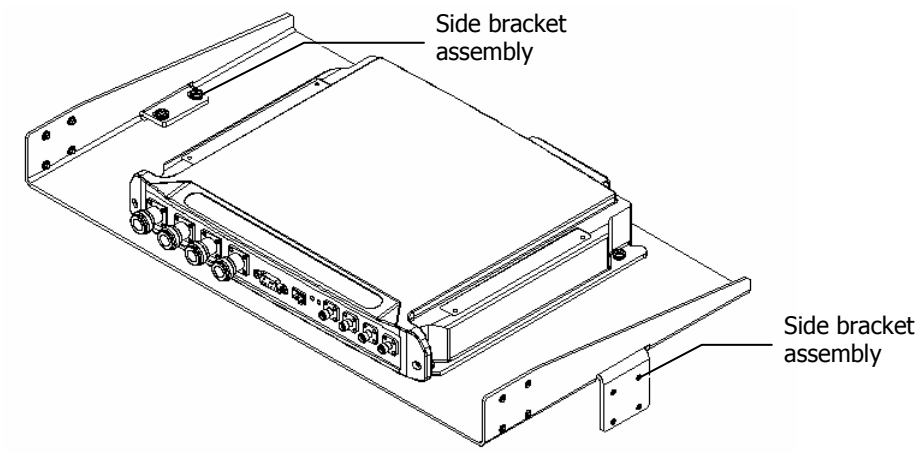

Figure 3-4. MA 850 Rack Installation

3. Assemble the plate to the MA 2000 RC by securing the brackets to the cabinet sides as illustrated below.

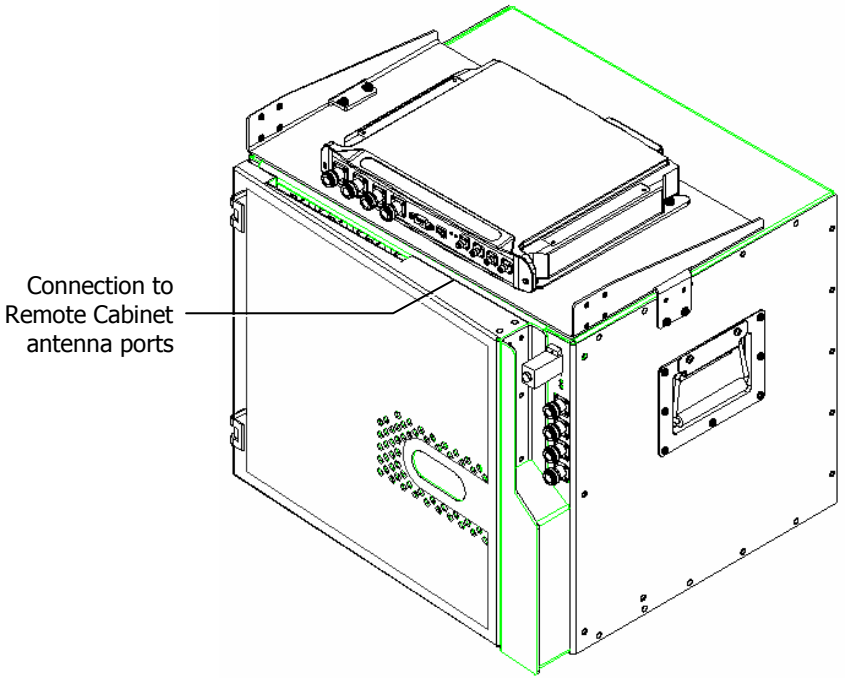

Figure 3-5. Illustration of MA 850 Mounted on MA 2000 RC

4. Connect the RC antenna ports to the MA 850 front panel port connectors as illustrated below.

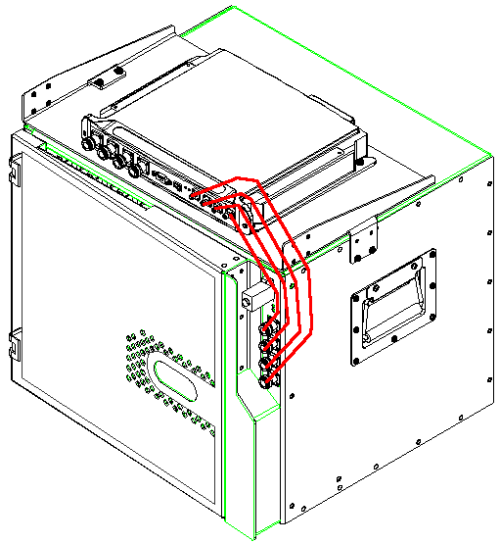

Figure 3-6. Illustration of RC Antenna port connections

5. Connect the antennas to the **MA 850 antenna ports**.

3.6.2 MA 850 Rack Mount

1. Assemble the side brackets as illustrated in Figure 3-4.
2. Assemble the MA 850 module to the supplied bracket using the four screws and washers.
3. Mount the assembly in the rack using the side brackets.

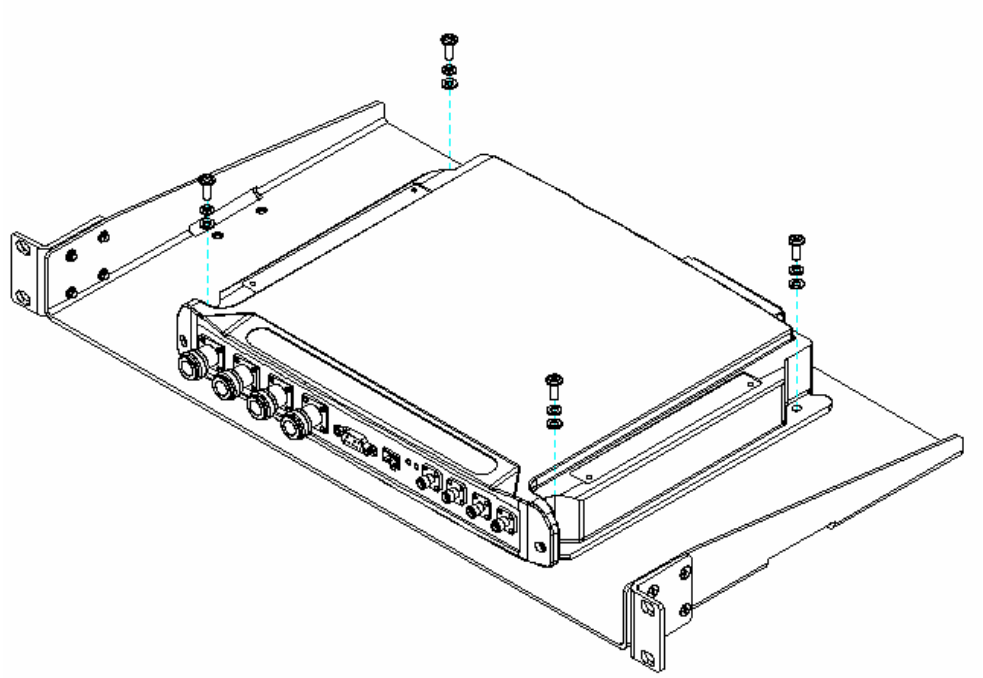

Figure 3-7. MA 850 to Bracket Installation

4. Connect the RC antenna ports to the SMA connectors on the MA 850 front panel.
5. Connect the antenna to the **MA 850** antenna ports.

3.6.3 MA 850 Wall Mount Installation

The MA 850 may be mounted independently on the wall near the RC cabinet.

- Connect the RC antenna ports to the SMA connectors on the MA 850 front panel.
- Connect the antenna to the **MA 850** antenna ports.

4

Configuration and Management

It is required to perform the following configuration procedures:

- Change the default IP address
- Configure the unconnected antenna ports (if not all antennas are connected)

The configuration is performed through a remote connection using a standard Web browser application (i.e. Explorer).

After configuring the unit, each channel and the corresponding element may be monitored.

NOTE 1: The unit may be configured either before or after the installation.
NOTE 2: ***Professional installers*** may configure the unit through a local connection to a computer running the MA 850 Setup Tool application.
NOTE 3: A local connection has priority over a WEB connection. A WEB connection will not be operational if there already is a local connection and the unit stop responding if a local connection is initiated while a WEB session is open.

4.1 Local Configuration and Monitoring

This procedure is performed through the **MA 850 Customer Tool** application installed and launched from a computer that is locally connected to the MA 850 unit.

For professional installer only

This procedure is performed through the **MA 850 Customer Tool** application installed and launched from a computer that is locally connected to the MA 850 unit.

4.1.1 Getting Started

1. Install the **850 MA Customer Tool** application on your computer.
2. Locally connect to the MA 850 **Local** connector using the RS232 9-pin cable provided with the MA 850 unit.
3. Launch the application on the computer. The MA 850 Customer Tool dialog appears.

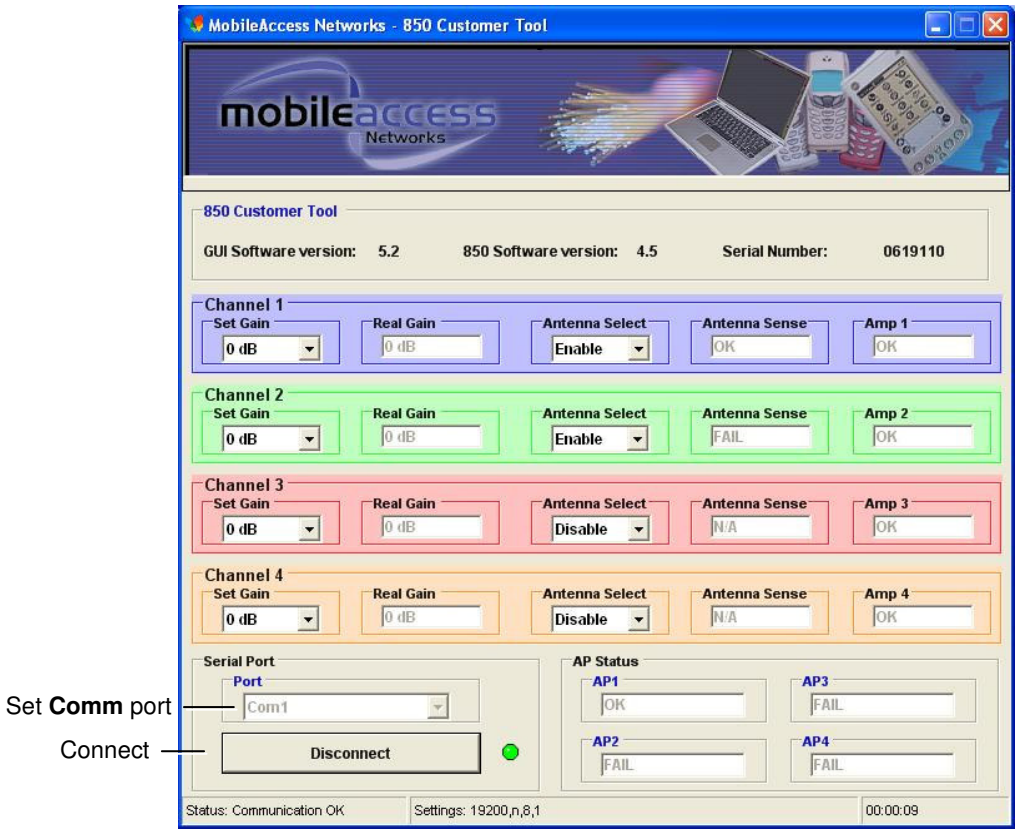

Figure 4-1. Connecting to the MA 850

4. Under **Serial Port**, Select the **com** port corresponding to the currently connected computer RS232 port and click **Connect.** The dialog options are described in the following sections.

4.1.2 MA 850 Customer Tool Window Description

The MA 850 Customer Tool window is displayed according to the instructions in the previous section. The window provides the channel configuration and monitoring options. It is divided into the following areas:

- General information – versions, etc.
- Four channel areas – contain channel gain setting, antenna connections and channel status
- AP Status - detected AP connection
- Connection options – at the bottom left side of the window

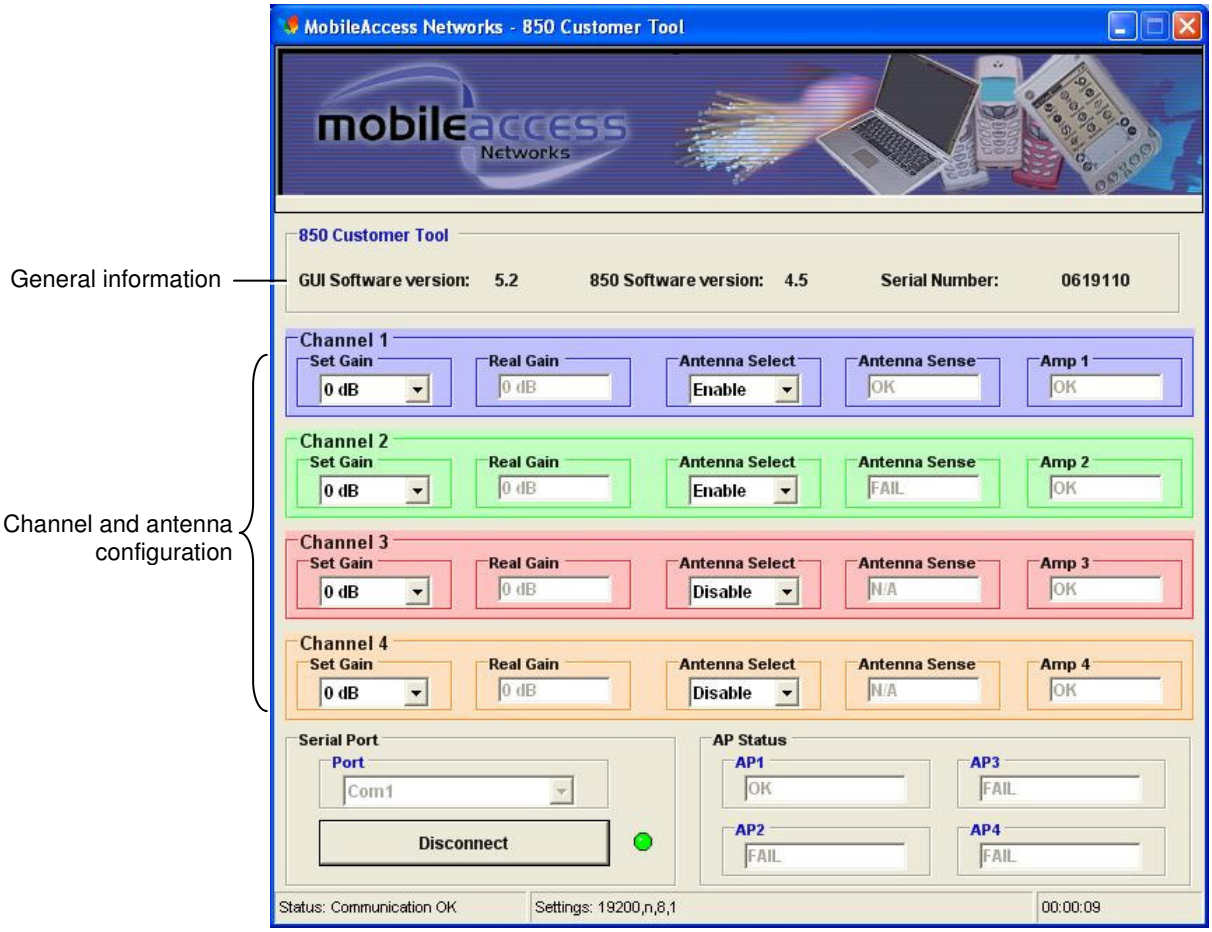

Figure 4-2. MA 850 Customer Tool Dialog

4.1.3 Configuration Using MA 850 Customer Tool

1. It is assumed that you are now locally connected to the MA 850 and have launched the Customer Tool on you computer according to the instructions in the previous sections.
2. All antennas are configured by default as being connected (Antenna Select – Enable). For channels where an antenna is not connected, under **Antenna Select,** choose **Disable**. The Antenna Sense for the corresponding antenna will indicate **N/A** (not applicable).
3. By default, the Gain for each channel is set to 0dB. To change the coverage area per channel, change the **Gain** for the specific channel.

4.1.4 Monitoring Using MA 850 Customer Tool

The MA 850 Customer Tool enables the user end-to-end monitoring of the channel status and elements.

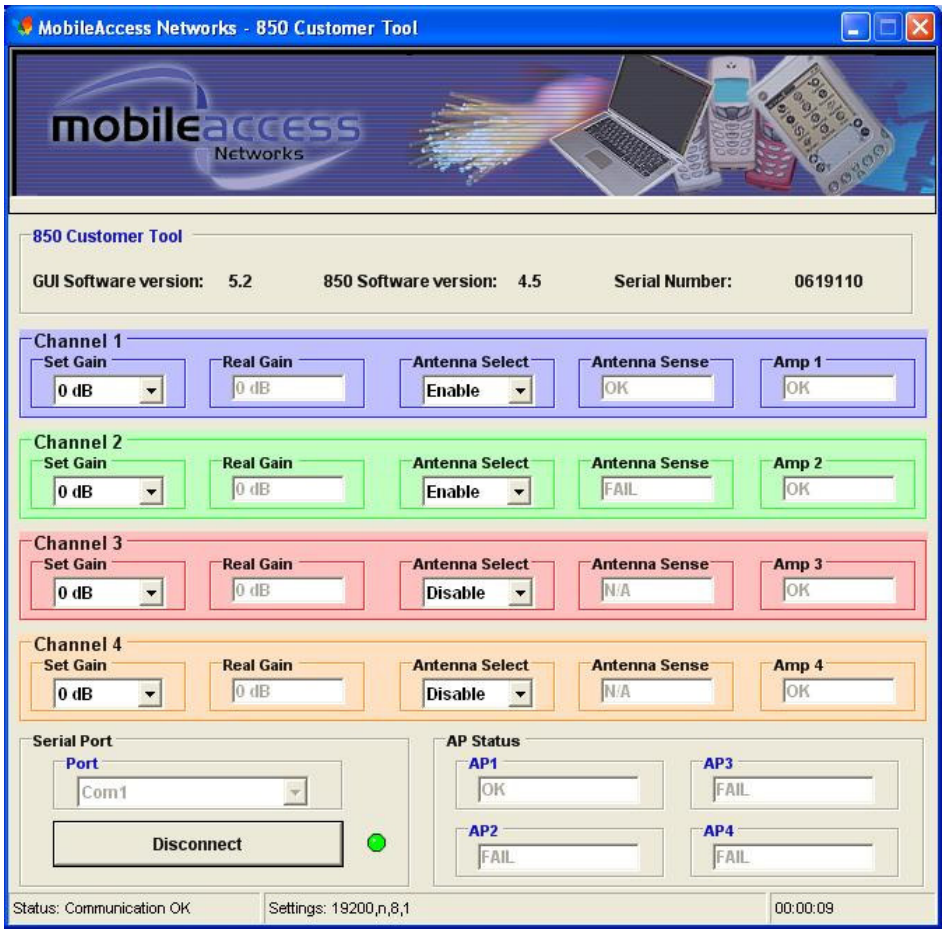

MA 850 Customer Tool Monitoring functions include:

- Antenna connection status – **Antenna Sense** for the corresponding channel, where:
  - OK – antenna connection detected
  - Fail – antenna not detected
  - N/A – **Antenna Select** is set to **Disable,** meaning that an antenna is not connected to the corresponding port

- Channel status – under **Amp 1 to Amp 4** for the corresponding channel:
  - OK – channel OK
  - Fail – channel failure
- AP Status:
  - OK – AP detected
  - Fail – AP not detected at the port.

4.2 Remote - Web Browser Session

NOTE: Be sure that there is not an open local session (section 4.1) to the MA 850 unit before you attempt to open a remote session to the same unit; otherwise, the unit may stop responding.

MA 850 whose SNMP parameters are defined may be connected to the network through an Ethernet connection and assigned addresses either through dynamic (DHCP) or static address assignment methods. The MA 850 units may then be remotely managed from any Web Browser by connecting to the IP Address of the specific MA 850 unit or through any Network Operating Center (NOC) using SNMP.

Once the network connections have been defined (section 4.2.1), the following operations may be performed remotely through a Web browser:

- Configure gain setting for each channel (section 4.3)
- View alarms (section 4.4)

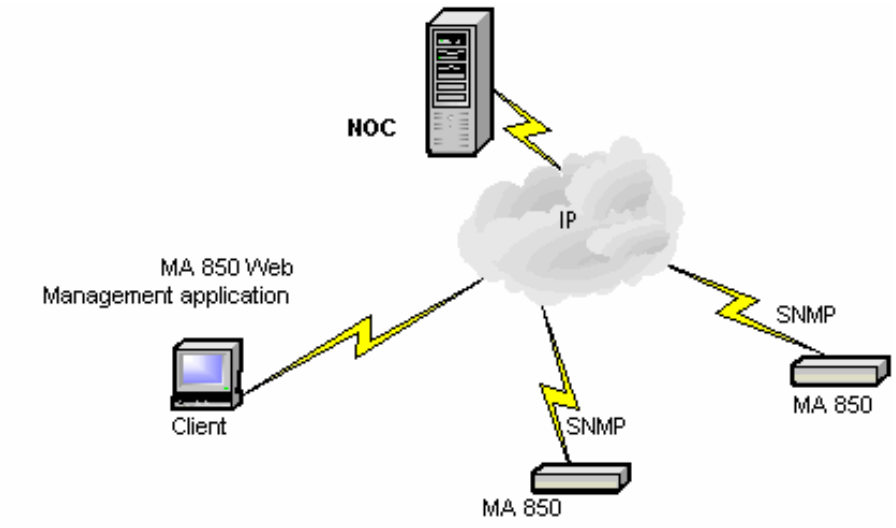

Figure 4-3. MA 850 Remote Management

4.2.1 IP Configuration Procedure

MA 850 units connected to the network may be assigned either dynamic IP Addresses through DHCP or static IP addresses (for networks without DHCP). The addresses may be assigned from a single location using the **Lantronix DeviceInstall** application supplied with the units.

The IP configuration procedure consists of the following steps:

- Installing and launching the **Lantronix DeviceInstaller** application on your computer.
- Connecting to the Network, page 30
- Performing Auto-Discovery, page 30
- For networks without DHCP – Assigning a Static IP Address, page 31
- Configuring the SNMP Parameters, page 34

4.2.1.1 Connecting to the Network

Connect each MA 850 unit ***first*** to the ***network*** and *then* to the power cable.

NOTE: It is recommended to record the location of the units according to the MAC addresses on the sticker at the rear of the units near the Ethernet port.

4.2.1.2 Performing Auto-Discovery

NOTE: Be sure the installed version is 3.6 or higher.

1. Install and launch the **Lantronix DeviceInstaller** application on your computer.

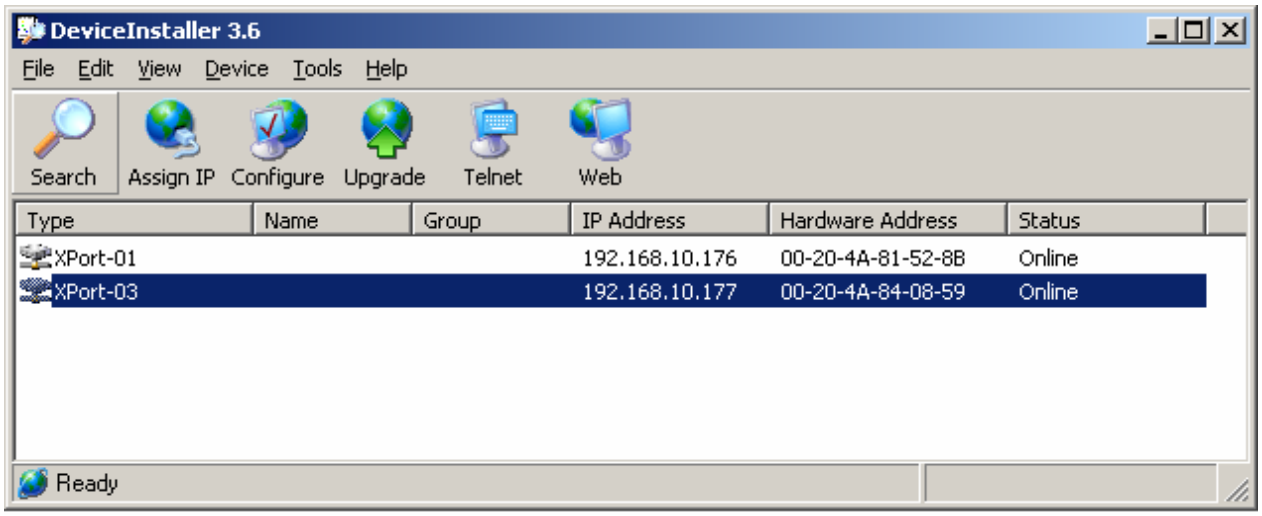

Figure 4-4. DeviceInstaller dialog

2. In the **DeviceInstaller** main window toolbar**,** click **Search** to perform auto-discovery**.** The MA 850 units currently in the network will be identified and listed in the window according to:
   - **Type -** communication hardware version - **xPort-01** or **xPort-03**

- **Hardware Address** – MAC address
- Additional identification parameters that may be available

3. For networks with DHCP:
   - The dynamically assigned IP Address will also be listed in the **IP Address** column.
4. For networks without DHCP:
   - Disregard the data displayed in the **IP Address** column and assign a Static IP address according to Assigning a Static IP Address, page 31.

What next ?

Define the SNMP parameters according to Configuring the SNMP Parameters, page 34.

4.2.1.3 Assigning a Static IP Address

NOTE: This procedure requires the MAC address of the MA 850, which is found on the label located at the rear of the unit.

Perform the following procedure for each of the MA 850 units listed in the Lantronix DeviceInstaller main window which are to be manually assigned IP Addresses.

1. Select the MA 850 unit and click the icon **Assign IP** in the toolbar.

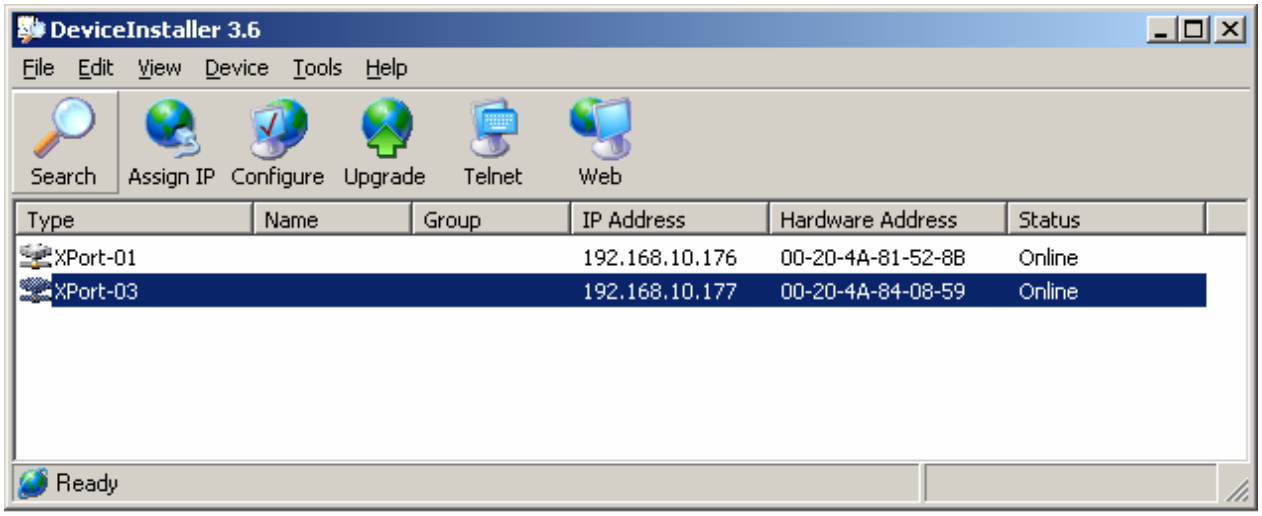

Figure 4-5. Assigning Static IP Address

The Device Identification window appears, showing the MAC address of the selected MA 850 unit.

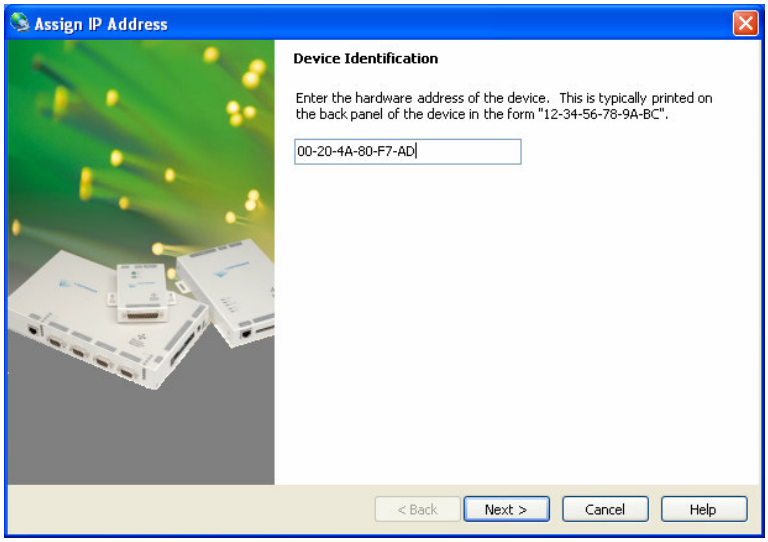

Figure 4-6. MAC Address

2. Click **Next.** The IP Address Assignment Method window appears.

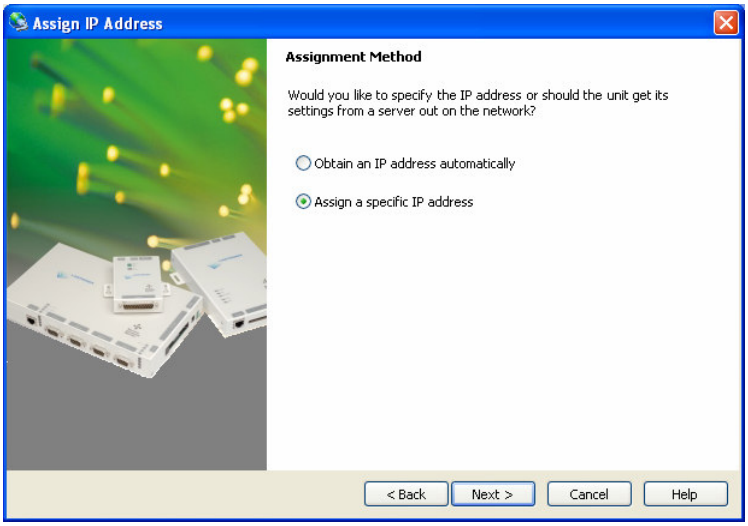

Figure 4-7. Static IP Address

3. Select **Assign a specific IP address;** then, click **Next.** The IP Settings window appears.

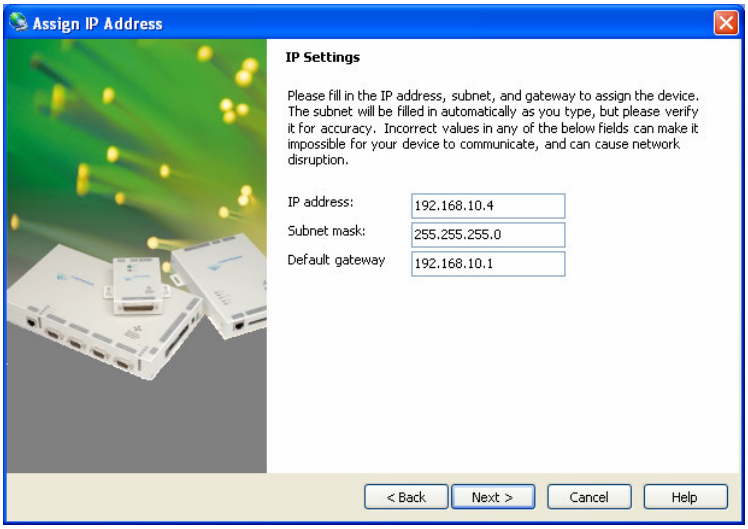

Figure 4-8. Static IP Address Definition

4. Enter the **IP Address**, **Subnet Mask** and **Default Gateway** values; then, click **Next.** The Assignment window appears.

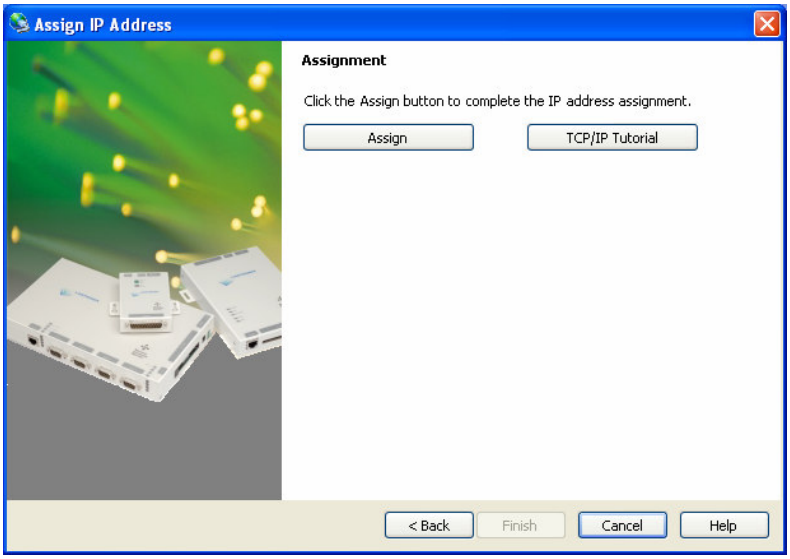

Figure 4-9. Assignment Window

5. Click **Assign** to assign the MA 850 unit the defined parameters.

   Once the parameters have been assigned, the message 'Completed Successfully' appears and the **Finish** button is enabled.

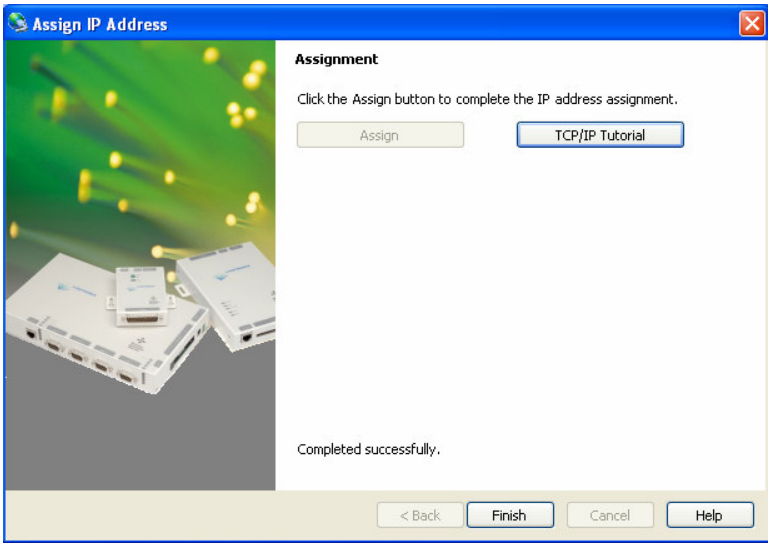

Figure 4-10. Finish Static IP Address Definition

6. Click **Finish.** The **Device Installer** Main window reappears and the installed unit will be listed in the window.

What next?

Define the SNMP parameters according to Configuring the SNMP Parameters, page 34.

4.2.1.4 Configuring the SNMP Parameters

Configure the SNMP Community and Trap destination addresses according to the instructions in this section.

NOTE: The required communication parameters are pre-set for each MA 850 unit. However if you do not succeed in connecting to the Telnet application, verify the serial communication parameter page 36 section 4.2.1.5

1. Select the MA 850 unit which will be configured (may be identified according to its MAC address value) and click the **Telnet** button in the toolbar.

   The Telnet dialog shows the IP address of the currently connected MA 850 unit.

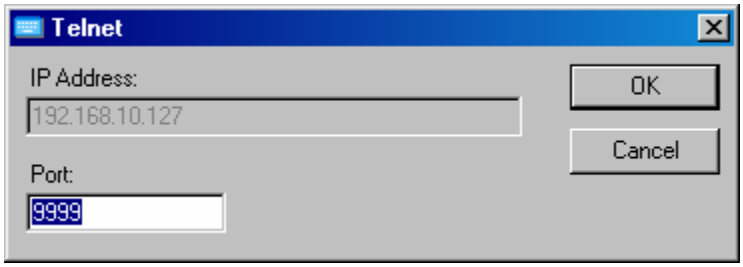

Figure 4-11. Telnet IP Address window

2. Click **OK** and immediately press **Enter** to go into Setup Mode. The current settings will be displayed, followed by the **Change Setup** menu.

```
Change Setup:
  0 Server configuration
  1 Channel 1 configuration
  3 SNMP configuration
  7 factory defaults (for manufacturer use only DO NOT
    SELECT!!)
  8 exit without save
  9 save and exit                Your choice ?
```

3. Enter **3** (SNMP Configuration).
4. Set the SNMP Read and Write community names and the SNMP traps destination addresses (up to three addresses can be defined) by responding with **Y** to the prompt **Set the Gateway IP Address** and defining the Address (as illustrated below).

```
SNMP community name for read (): public
SNMP community name for write (): private
Enter IP addresses for SNMP traps:
    1: (000) 192.(000) 168.(000) 10.(000) 22
    2: (000) .(000) .(000) .(000)
    3: (000) .(000) .(000) .(000)
```

5. Press **Enter** to run through the rest of the parameters. When the Setup Menu is displayed again, select **9 – Save and Exit.**

4.2.1.5 Configuring Serial Parameters

This section describes how to verify and configure the serial communication parameters for each MA 850 unit.

1. From the **DeviceInstaller** Main window, select the MA 850 unit to be configured and click the **Configure** button the toolbar. The Configure Device dialog appears.

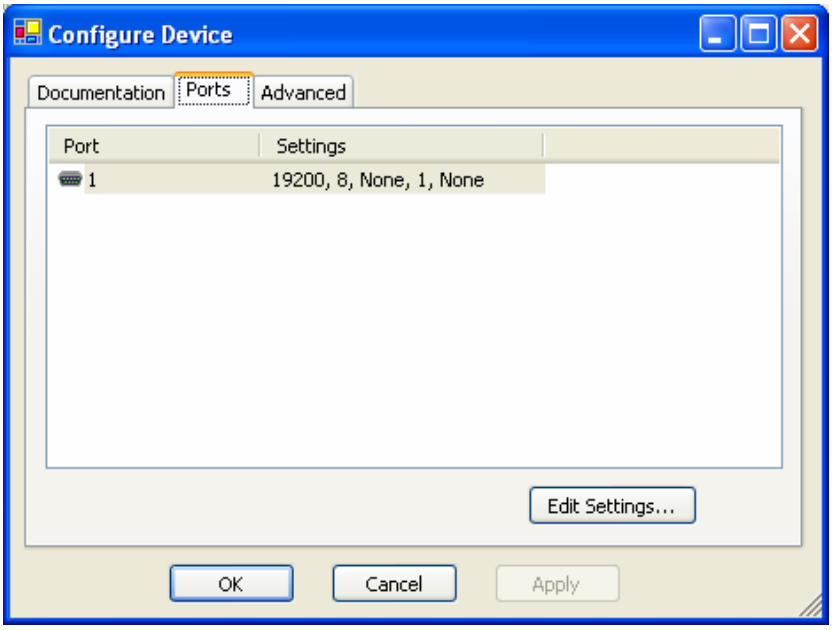

Figure 4-12. Current Serial Port Parameters

2. Click the **Ports** tab and then the **Edit Settings...** button. The Port Properties dialog appears.

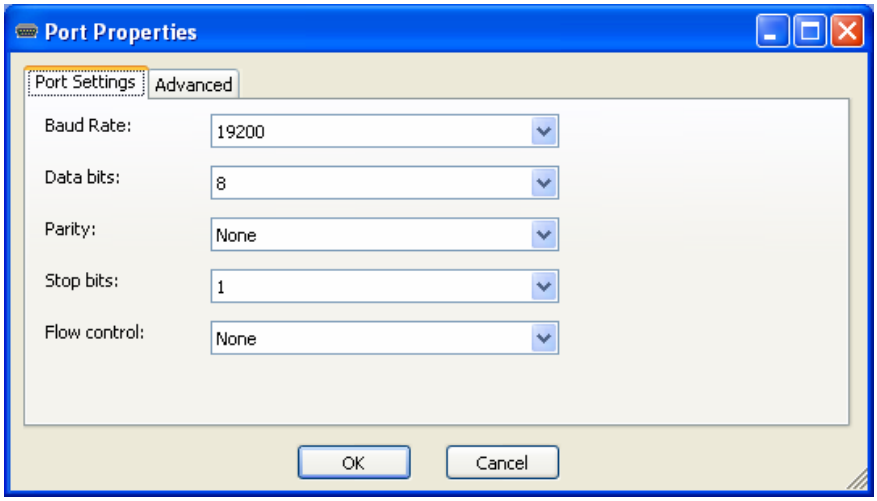

Figure 4-13. Port Properties

3. Set the parameters as follows: Baud Rate 19200, Data Bits 8, Parity None, Stop Bits 1, Flow Control None; then, click **OK.** The DeviceInstaller Main window appears.

4.2.2 Login and User Levels

You may login to the MA 850 unit through any Web browser. Two user levels are available:

- **guest (guestpass)** – monitoring options only
- **admin (adminpass)** – monitoring and configuration options

NOTE: The password is **case** sensitive – use **lower case** letters.

To login to the MA 850 configuration application

1. Run a Web Browser application (i.e. Internet Explorer).
2. Enter the IP Address of the MA 850 unit. (i.e. **http://192.168.10.127**). The Login dialog appears. The application version is displayed at the top of the window.

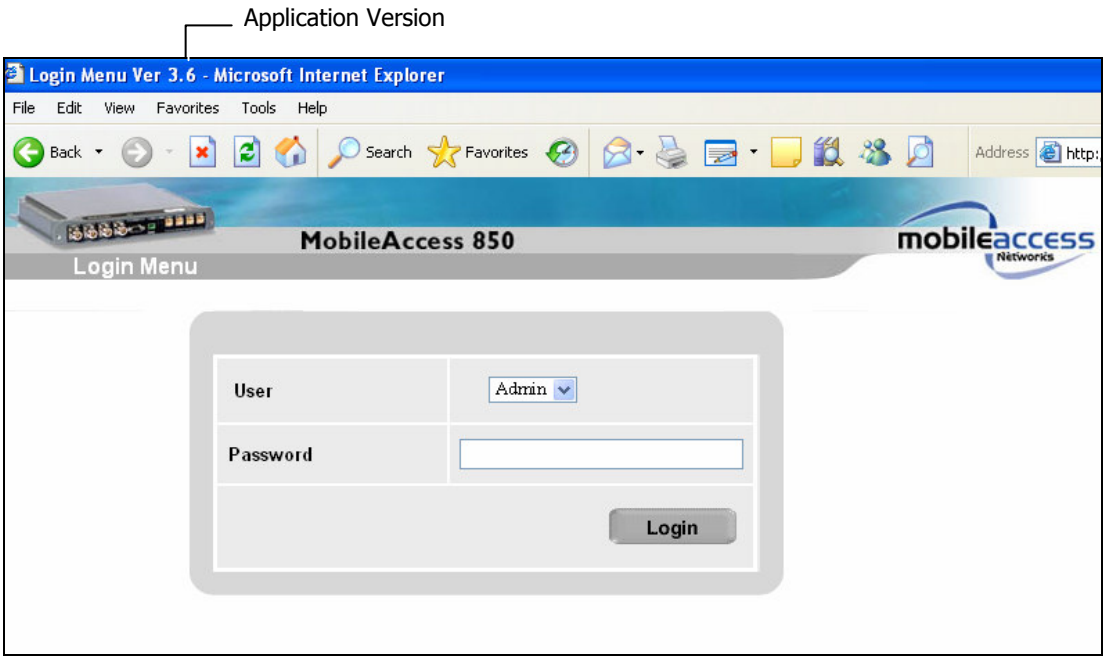

Figure 4-14. Login Window

3. Select the User (**guest** or **admin**) and the password; where **admin** has configuration privileges.
4. Click **Login.** The Main configuration window appears. The window shows the current configuration (**Active Configuration**) and provides access to configuration and monitoring options. The Main window is described in the following section.

4.2.3 MA 850 View

Upon login, the MA 850 View shows the current 802.11b/gs AP and antenna connections.

Menu options on the left side provide access to various configuration options as described in Table 4-1. Element color indications is described in Table 4-2.

NOTE: The display is refreshed automatically; however, if necessary, be sure to use the **application Refresh** button in the menu options (and **not** the Web Browser refresh).

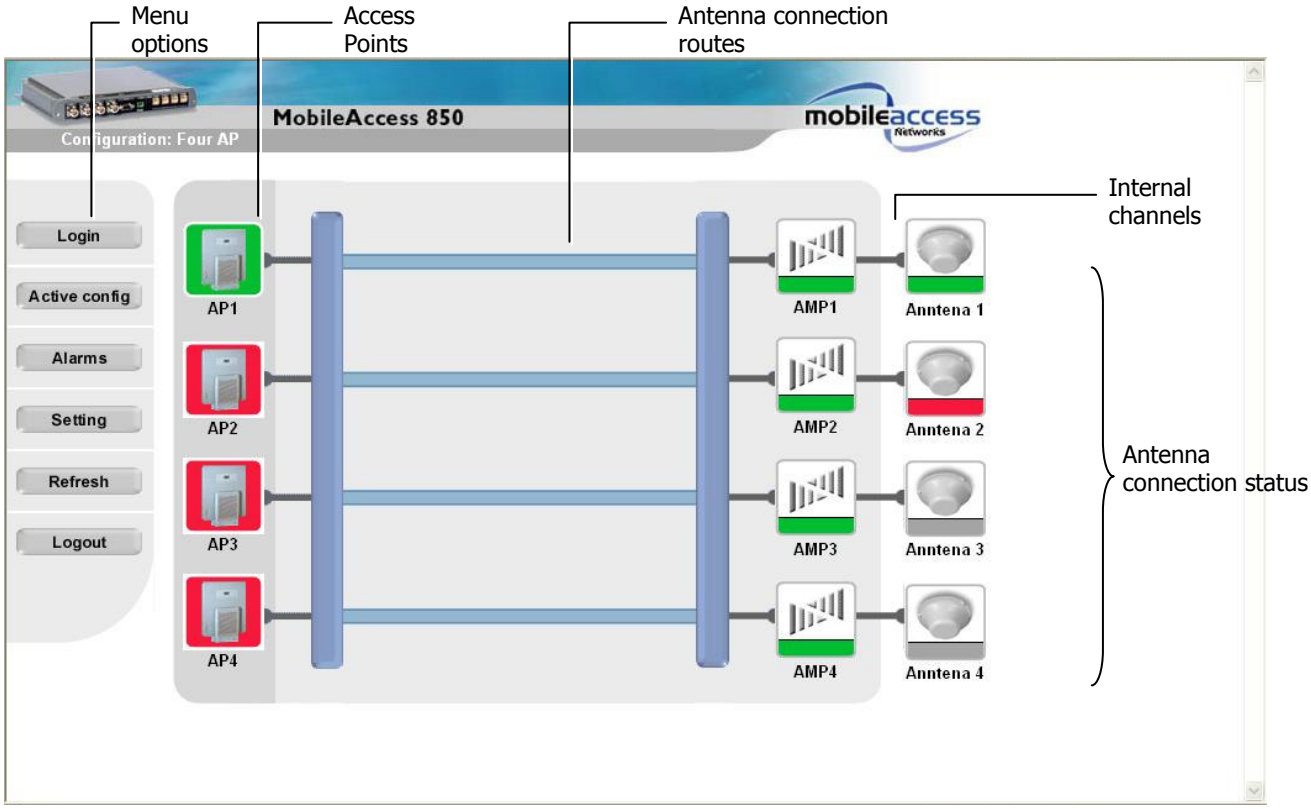

Figure 4-15. Main Window

Table 4-1. MA 850 View Menu Options

Menu Option	Description
Login/Logout	Click to login using a different user level
Active config	Displays the current configuration
Alarms	Alarm monitoring
Refresh	Used to refresh the display.
Setting	Gain setting (default = 0) and Redundancy enable/disable options

Table 4-2. MA 850 View Color Indications

Option	Description
Green	OK
Red	Error indication: Red AP – an AP is not connected or faulty. Red antenna – antenna not detected by antenna sense mechanism Red Amp – channel malfunction identified in the MA 850 unit
Purple	Location (not status) of backup AP in one-AP or two-AP configurations with in which the redundancy option is enabled. Only if the backup AP is activated (upon failure of a default AP), does its color indicate status (green, red).
Gray	Not relevant in current configuration – whether an AP is physically connected to the specific port or not.

4.3 Gain Setting

The default gain for each channel is set to 0dB. MA 850 enables the authorized user (**admin** level) to adjust the gain for every channel to counteract changes in the environment.

For example, you may want to reduce the coverage area of a channel to prevent interference. Or, the output of an AP with a low power (<20dBm) can be increased using the gain value.

To change the gain setting of a channel

1. Click the **Setting** button in the Main window. The Gain Setting options appear.

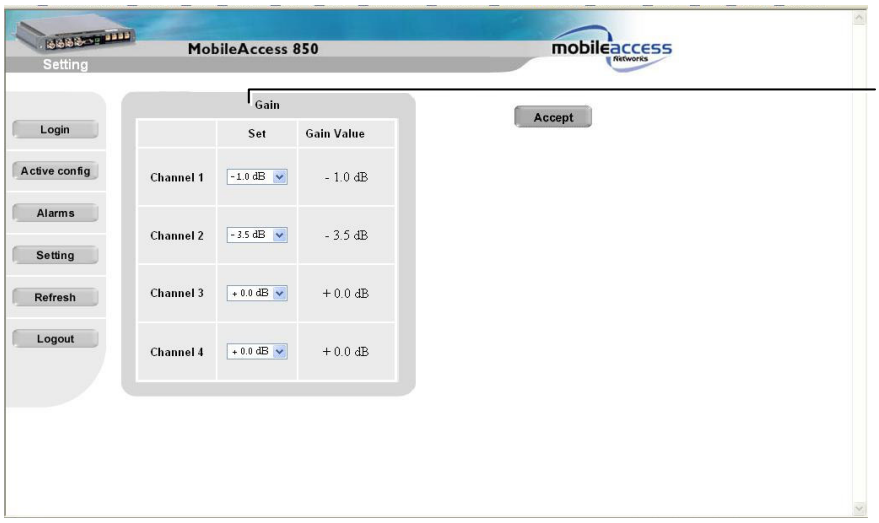

Figure 4-16. Gain Setting Options

2. For the relevant channel, change the gain. Range = -10 to +5 dB
3. Click **Accept.** The gain value for the channels at the unit is displayed under the **Gain Value** column.

4.4 Monitoring Alarms

MA 850 provides the following alarms, which may be viewed by clicking the **Alarms** button in the Main window:

- **Access Point Sense –** senses the connection of configured APs
- **Low power –** internal channel operation status
- **Antenna sense –** senses connected antennas. This option can be disabled for antennas that are not connected

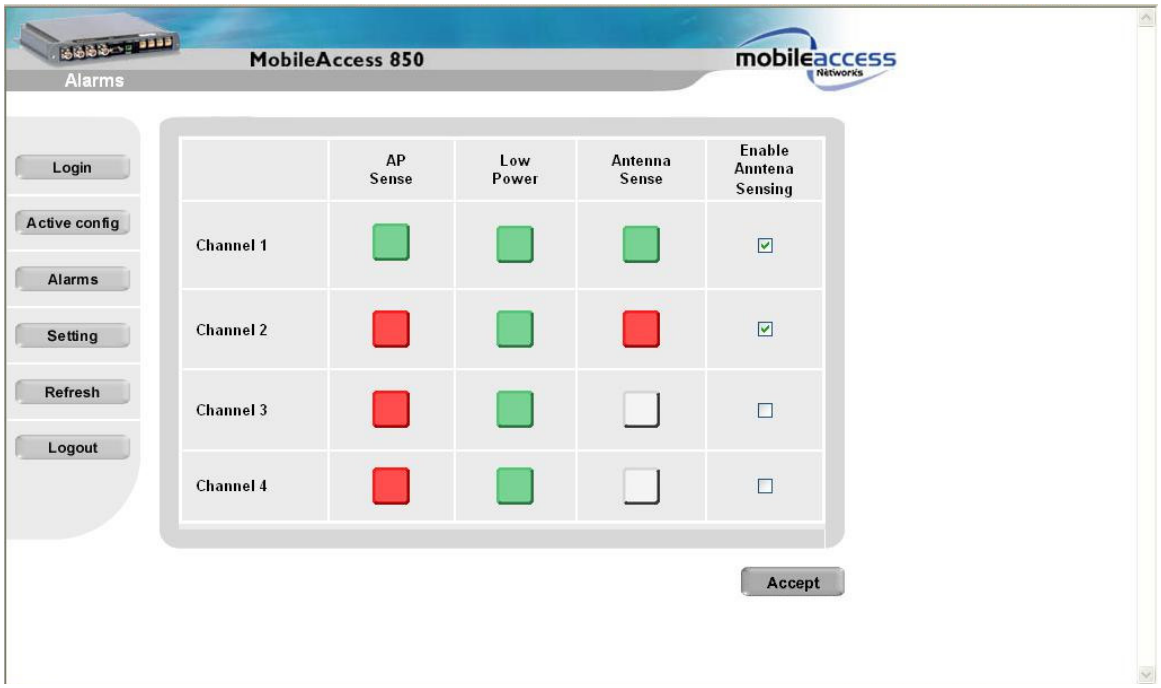

Figure 4-17. Alarms Window

5

SNMP Management Using Any Standard SNMP Manager

The MA 850 packages provide MIBSs that enable standard SNMP (Version 2.0) managers such as HP OpenView to view event traps sent by the MA 850 unit and to configure the unit.

One MIB file is provided: MA-XPORT850-MIB– describes the architecture of the managed elements and contains the events in the system

NOTE: These traps provide a general indication of the type of failure. The MA 850 enables identifying the source of the problem and system monitoring parameters.

5.1 Traps List

NOTE: Traps are only sent to defined trap destinations (section 4.2.1.4).

The following traps are provided:

Table 5-1. List of MA 850 Traps

Name	Type	OID	Description
x850SystemOnNotify	NOTIFICATION-TYPE	90.4.2.0.1	System On.
x850SerialNotify	NOTIFICATION-TYPE	90.4.2.0.2	serial communication status failed success
x850ntenaConnectedNotify	NOTIFICATION-TYPE	90.4.2.0.3	Antenna Connected
x850ntenaDisconnectedNotify	NOTIFICATION-TYPE	90.4.2.0.4	Antenna Disconnected
x850OutPowerLowNotify	NOTIFICATION-TYPE	90.4.2.0.5	Out Power Low
x850OutPowerNormalNotify	NOTIFICATION-TYPE	90.4.2.0.6	Out Power Normal
x850PConnectedNotify	NOTIFICATION-TYPE	90.4.2.0.7	AP Connected
x850PDisconnectedNotify	NOTIFICATION-TYPE	90.4.2.0.8	AP Disconnected
x850MPRecoveredNotify	NOTIFICATION-TYPE	90.4.2.0.11	AMP Recovered
x850MPFailedNotify	NOTIFICATION-TYPE	90.4.2.0.12	AMP Failed

To view the traps using any standard SNMP manager

NOTE: It is assumed that the IP Address of at least one destination is already defined.

From a computer *configured as a trap destination* (configured to receive the traps), load the two MIB files to the SNMP manager. The following figure shows the MIB tree that includes the loaded MobileAccess 850 file.

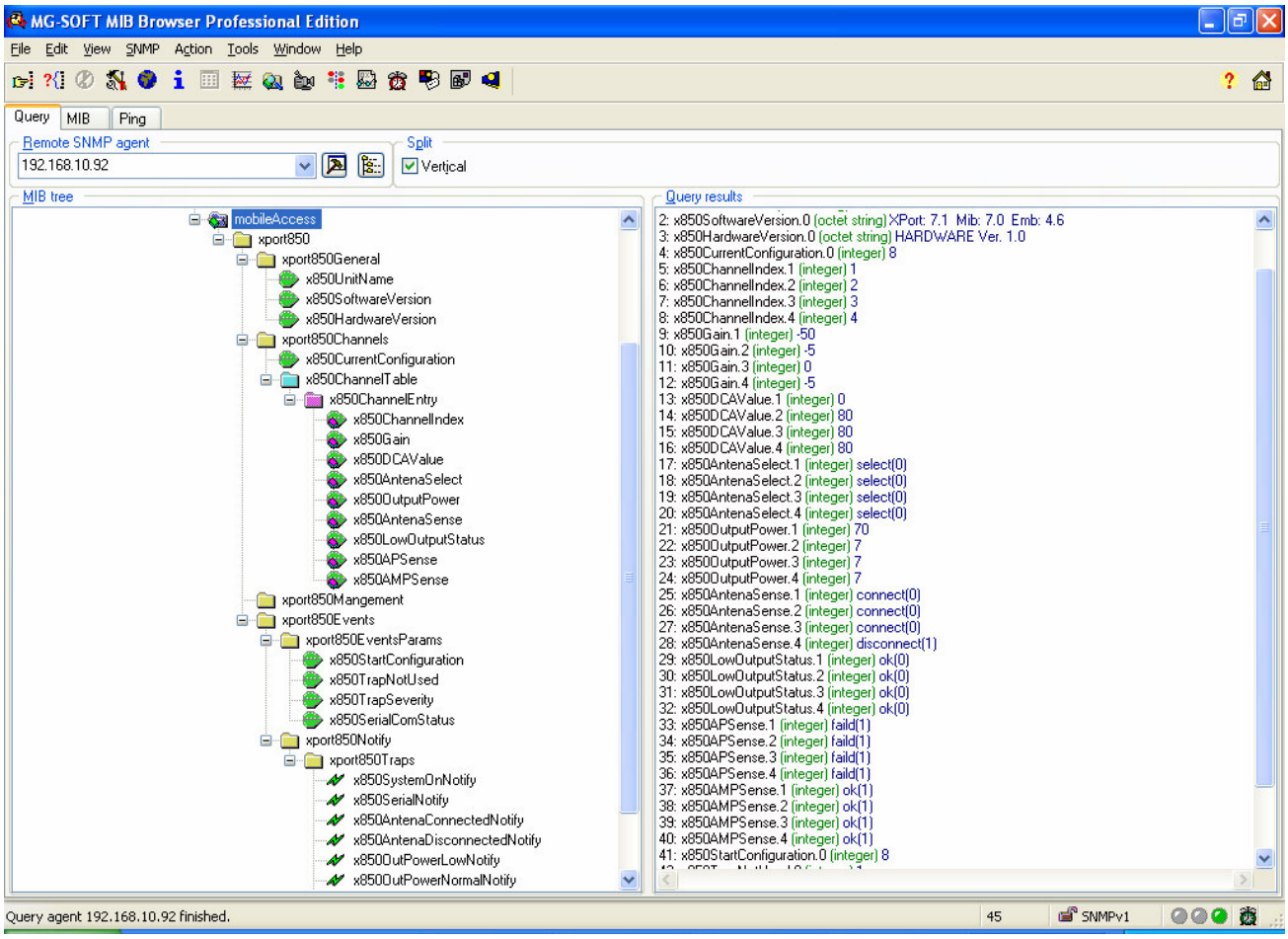

Figure 5-1. MIB Tree with Loaded MobileAccess 850 Files

Specifications

802.11b/g RF Parameters

Bandwidth	2400 - 2485 MHz
Gain TX	0 dB per port
Gain RX	10 dB
NF RX	7 dB
Flatness	±1.5 dB

Mobile Services/WMTS Parameters

	MA-850		MA-850U		
Mobile Services	Cell WMTS	PCS WMTS	Cell WMTS	DCS WMTS	UMTS
Band (MHz)	608-960	1395-1990	608-960	1395-1880	1920-2170
Insertion Loss (dB/port)	1.0	2.0	1.0	2.0	3.0
Flatness (dB)	+/- 0.5	+/- 1.0	+/- 0.5	+/- 1.0	+/- 1.5

RF Connections

802.11 b/g	(4) SMA Female, 50 ohm
Mobile Services	(4) SMA Female, 50 ohm
Antenna Ports	(4) N-type Female, 50 ohm

Management

Configuration and monitoring via local RS232 connection and remote connection through a Web browser application.

Power

Power	20 to 48 VDC; 20W

Physical Specification

Dimensions	242 mm x 279 mm x 38 mm (9.54 in x 10.98 in x 1.5 in)
Weight	2.82 kg (6.2 lb)

Environmental Specifications

Temperature

Operating	0°C to +50°C (32°F to 122°F)
Storage	-20°C to 85°C (-4°C to 185°C)

Humidity

Operating	95% (non-condensing)
Storage	95% (non-condensing)

Standards and Approvals

USA FCC–47 CFR 15
UL 60950-1
CAN/CSA C22.2 No 60950

Ordering Information

850	WLAN Module
850-U	WLAN module with UMTS support

Accessory Kits for mounting MA-850 with other MobileAccess elements:

AK-850-1000	MA-850 with MA-1000
AK-850-1200	MA-850 with MA-1200
AK-850-MDLT	MA-850 with Modulite
AK-850-2000	MA-850 with MA-2000
AK-850-SA	MA-850 standalone