Linx TECHNOLOGIES

HT Keyfob Transmitter Data Guide

Wireless made simple®

Warning: Some customers may want Linx radio frequency ("RF") products to control machinery or devices remotely, including machinery or devices that can cause death, bodily injuries, and/or property damage if improperly or inadvertently triggered, particularly in industrial settings or other applications implicating life-safety concerns ("Life and Property Safety Situations").

NO OEM LINX REMOTE CONTROL OR FUNCTION MODULE SHOULD EVER BE USED IN LIFE AND PROPERTY SAFETY SITUATIONS. No OEM Linx Remote Control or Function Module should be modified for Life and Property Safety Situations. Such modification cannot provide sufficient safety and will void the product's regulatory certification and warranty.

Customers may use our (non-Function) Modules, Antenna and Connectors as part of other systems in Life Safety Situations, but only with necessary and industry appropriate redundancies and in compliance with applicable safety standards, including without limitation, ANSI and NFPA standards. It is solely the responsibility of any Linx customer who uses one or more of these products to incorporate appropriate redundancies and safety standards for the Life and Property Safety Situation application.

Do not use this or any Linx product to trigger an action directly from the data line or RSSI lines without a protocol or encoder/decoder to validate the data. Without validation, any signal from another unrelated transmitter in the environment received by the module could inadvertently trigger the action.

All RF products are susceptible to RF interference that can prevent communication. RF products without frequency agility or hopping implemented are more subject to interference. This module does not have a frequency hopping protocol built in.

Do not use any Linx product over the limits in this data guide. Excessive voltage or extended operation at the maximum voltage could cause product failure. Exceeding the reflow temperature profile could cause product failure which is not immediately evident.

Do not make any physical or electrical modifications to any Linx product. This will void the warranty and regulatory and UL certifications and may cause product failure which is not immediately evident.

Table of Contents

1 Description
1 Features
1 Applications
1 OEM Configurations
2 Ordering Information
2 Electrical Specifications
3 Theory of Operation
4 Setting the Transmitter Address
4 Button Assignments
5 Contention Considerations
5 Battery Replacement
5 Assembly Diagram
6 Compliance Requirements
6 Labeling / Instruction Requirements
8 Typical Applications
10 Resources
11 Notes

HT Keyfob Transmitter

Data Guide

Description

The Linx HT Series Keyfob transmitter is ideal for general-purpose remote control and command applications. It has been pre-certified for FCC Part 15, Industry Canada, and European CE (433MHz only) compliance, reducing development costs and time to market. Available in 315, 418 (standard), or 433.92MHz, this stylish and compact remote has a range of up to 750 feet when combined with an LR, KH3 or LT Series module. The Keyfob can be configured with 1 to 5 buttons and the keypad and labeling can be modified to meet specific customer requirements. Selectable addressing provides security and allows the creation of up to 1,022 distinct transmitter-receiver relationships. The Keyfob is available in black, white, or translucent colors. The transmission can be decoded using a matching KH3 Series receiver / decoder, or an LR or LT Series receiver paired with a decoder IC or microcontroller. The unit operates from a single 3V CR2032 lithium button cell.

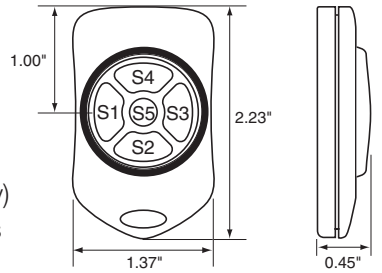

Figure 1: Package Dimensions

Figure 2: Keyfob Button Configurations

OEM Configurations

With a one-time NRE and minimum order, Linx can configure the keypad and label areas. Contact Linx for details.

Features

- FCC, IC and CE pre-certified
- Long range
- 1 to 5 buttons
- Compact, stylish package

Applications

- General remote control
- Keyless entry
- Garage / gate openers
- Lighting control
- Home / industrial automation
- Wire elimination

Ordering Information

Ordering Information	
Part Number	**Description**
OTX-***-HH-KF#-HT-xxx	HT Keyfob Transmitter
EVAL-***-HH-KF#-HT	HT Keyfob Evaluation Kit

*** = 315, 418 (Standard) or 433.92MHz
xxx = Color (Leave blank for standard black)
WHT = White
CRE = Red
CGY = Gray

Figure 3: Ordering Information

Electrical Specifications

Keyfob Electrical Specifications						
Parameter	**Designation**	**Min.**	**Typ.**	**Max.**	**Units**	**Notes**
Power Supply						
Operating Voltage	V_{CC}	2.1	3.0	3.6	VDC	
Supply Current	I_{CC}		3.4		mA	
Power-Down Current	I_{PDN}		5.0		nA	1
Transmitter Section						
Transmit Frequency Range	F_C					
OTX-315-HH-KF#-HT			315		MHz	
OTX-418-HH-KF#-HT			418		MHz	
OTX-433-HH-KF#-HT			433.92		MHz	
Center Frequency Accuracy		–50		+50	kHz	
Data Rate			9,600		bps	
Environmental						
Operating Temperature Range		–40		+85	°C	1

1. Characterized, but not tested

Figure 4: Electrical Specifications

Theory of Operation

The HT Series Keyfob Transmitter combines a high-performance synthesized transmitter with an on-board encoder IC to form a highly reliable, yet cost-effective RF remote control transmitter. The transmitter's synthesized architecture delivers outstanding stability and frequency accuracy while minimizing the effects of temperature, antenna port loading and mismatching. This reduces or eliminates frequency pulling, bit contraction, and other negative effects common to SAW-based transmitter architectures, providing a significantly higher level of performance and reliability.

When a button is pressed on the Keyfob, power is applied to the internal circuitry and the encoder IC is enabled. The encoder detects the logic states of the address lines and button data lines. These states are formatted into a three-word transmission cycle that continues until the button is released. The encoder data is used to modulate the transmitter, which, through the antenna, conveys the data into free space. On the receiver side, a decoder IC or custom microcontroller is used to check the transmitter's address bits against the address settings of the receiving device. If a match is confirmed, the decoder's outputs are set to replicate the transmitter's button states. These outputs can then be used to activate external circuitry required by the application.

The transmitter is compatible with several Linx receiver products, including the LR, KH3, LT, and OEM product families. Ranges of up to 750 feet are possible when the transmitter is combined with the receiver and a good antenna. Applications operating over shorter distances will also benefit from the increased link reliability and superior noise immunity provided by the LR Series receiver.

The DS Series encoder inside the Keyfob transmitter uses a protocol based on the Holtek® HT640 encoder. It is completely backwards compatible with older generation transmitters (CMD-KEY#-*** part numbers) and systems based on the HT658 decoder.

Setting the Transmitter Address

The Keyfob allows the selection of one of 1,022 unique addresses. All keyfobs are supplied set to the same address. The address can be changed to avoid contention with other units or to create unique relationships. This is accomplished by cutting the traces. The traces are accessed by removing the rear cover.

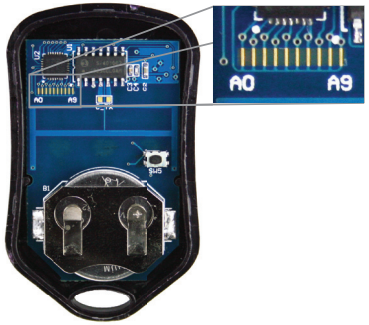

Figure 5: Address Traces

If the trace is intact, the address line is connected to ground, otherwise it is floating. The receiver's address must match exactly in order for the units to communicate. Application Note AN-00300 describes in detail how to set the address to match any of the receivers offered by Linx. This note can be found in the Support section of the Linx website, www.linxtechnologies.com.

Note: Leaving all of the traces intact or all of them cut are not valid addresses. At least one trace must be different from the rest.

Button Assignments

The Keyfob is available in five button configurations. Those configurations and the corresponding switch numbers are shown in Figure 6. The table shows which encoder data line has been assigned to each switch. When a button is pressed, the data line goes high, causing the corresponding data line on the decoder to go high if the address has been learned.

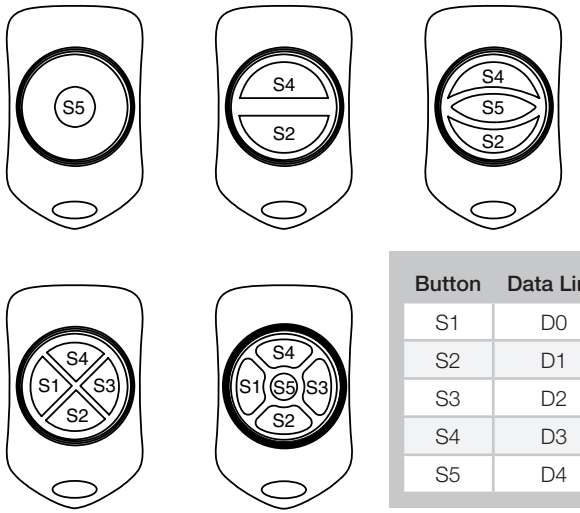

Button	Data Line
S1	D0
S2	D1
S3	D2
S4	D3
S5	D4

Figure 6: OTX-***-HH-KF#-MS Button Assignments

Contention Considerations

It is important to understand that only one transmitter at a time can be activated within a reception area. While the transmitted signal consists of encoded digital data, only one carrier of any particular frequency can occupy airspace without contention at any given time. If two transmitters are activated in the same area at the same time, then the signals will interfere with each other and the decoder will not see a valid transmission, so it will not take any action.

Battery Replacement

The transmitter utilizes a standard CR2032 lithium button cell. In normal use, it provides 1 to 2 years of operation. Access for replacement is accomplished by gently prying apart the two halves of the Keyfob at the seam (fingernails or a coin will do). Once the unit is open, remove the battery by sliding it out from beneath the retainer.

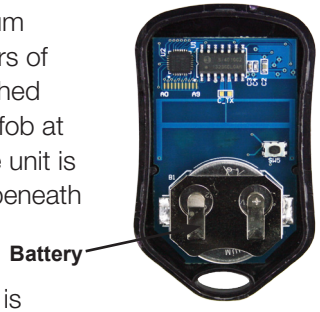

Figure 7: Battery Access

There may be the risk of explosion if the battery is replaced by the wrong type. Replace it with the same type of battery while observing the polarity shown in Figure 7.

Assembly Diagram

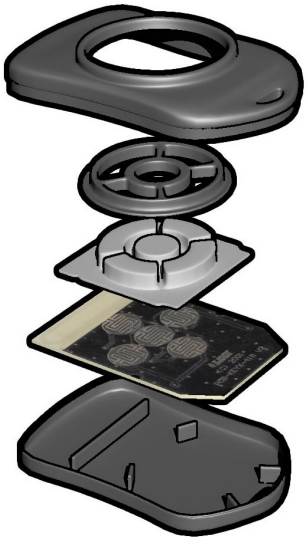

Figure 8: OTX-***-HH-KF#-MS Assembly

Labeling / Instruction Requirements

The transmitter has been pre-certified for FCC Part 15 and Industry Canada license-exempt RSS standards for an intentional radiator. The 433.92MHz version has also been tested for CE compliance for use in the European Union. The 315MHz and 418MHz versions are not legal for use in Europe. It has already been labeled in accordance with FCC, Industry Canada and CE regulations. No further labeling of the unit is needed; however, it is necessary to include the following statement in the end product's instruction manual or insert card. EU does not require a statement.

INSTRUCTION TO THE USER

This device complies with Part 15 of the FCC Rules and Industry Canada license-exempt RSS standard(s). Operation of this device is subject to the following two conditions:

1. This device may not cause harmful interference, and
2. This device must accept any interference received, including interference that may cause undesired operation.

This equipment has been tested and found to comply with the limits for a Class B digital device, pursuant to Part 15 of the FCC Rules. These limits are designed to provide reasonable protection against harmful interference in a residential installation. This equipment generates, uses and can radiate radio frequency energy and, if not installed and used in accordance with the instructions, may cause harmful interference to radio communications. However, there is no guarantee that interference will not occur in a particular installation. If this equipment does cause harmful interference to radio or television reception, which can be determined by turning the equipment off and on, the user is encouraged to try to correct the interference by one or more of the following measures:

- Reorient or relocate the receiving antenna.
- Increase the separation between the equipment and receiver.
- Connect the equipment into an outlet on a circuit different from that to which the receiver is connected.
- Consult the dealer or an experienced radio / TV technician for help.

The user is cautioned that changes and modifications made to the equipment without the approval of manufacturer could void the user's authority to operate this equipment.

Le présent appareil est conforme aux CNR d'Industrie Canada applicables aux appareils radioexempts de licence. L'exploitation est autorisée aux deux conditions suivantes : (1) l'appareil ne doit pas produire de brouillage, et (2) l'utilisateur de l'appareil doit accepter tout brouillage radioélectrique subi, même si le brouillage est susceptible d'en compromettre le fonctionnement.

Receivers

There are four options for receivers within the Linx product line. The first option is to use one of the OEM Function Modules, such as the Relay Module. These items are also pre-certified and can be immediately included in a product.

The other options are to use one of the Linx receiver modules. The signal sent by the Keyfob transmitter can be received by the LR Series receiver module or the LT Series transceiver module. These modules can be connected to the DS Series decoder to decode the signal, or a custom microcontroller can be programmed to decode it and take specific action.

The KH3 Series offers a slightly simpler solution by combining the LR Series receiver and the DS Series decoder in a single package. This receiver only supports the Holtek protocol, not the serial protocol.

Figure 9: Linx Receivers

When a button is pressed on the transmitter, a corresponding line on the decoder goes high (as long as the addresses match). This can then be connected to whatever circuitry is required by the application.

Application Note AN-00300 discusses in detail how to set the addresses on all of the units. Data guides for all of the receivers and the DS Series decoder can be found on the Linx website, www.linxtechnologies.com.

Typical Applications

Figure 10 shows a typical schematic using the LR Series receiver and the DS Series decoder.

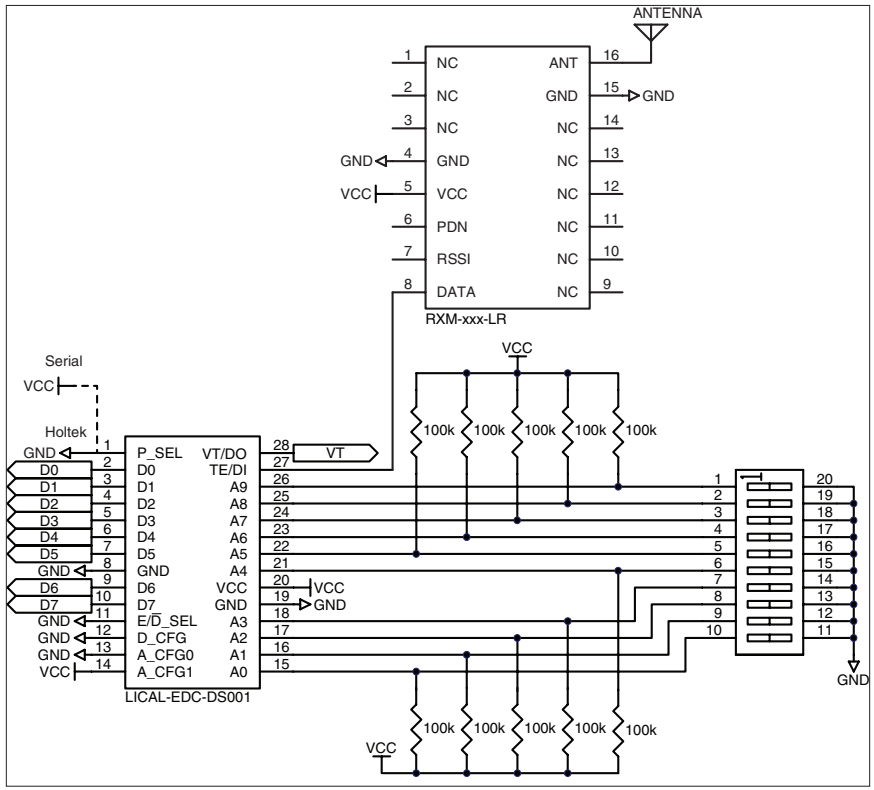

Figure 10: LR Receiver and DS Decoder Schematic

The decoder has ten address lines that must match the transmitter address lines. A DIP switch is commonly used to set these, but they can also be hardwired. As long as the address lines match, when a button on the transmitter is pressed, a corresponding data line on the decoder (D0–D7) goes high. These data lines can then be connected to external circuitry to perform whatever function is required by the application.

Resources

Support

For technical support, product documentation, application notes, regulatory guidelines and software updates, visit www.linxtechnologies.com

RF Design Services

For customers who need help implementing Linx modules, Linx offers design services including board layout assistance, programming, certification advice and packaging design. For more complex RF solutions, Apex Wireless, a division of Linx Technologies, creates optimized designs with RF components and firmware selected for the customer's application. Call +1 800 736 6677 (+1 541 471 6256 if outside the United States) for more information.

Antenna Factor Antennas

Linx's Antenna Factor division has the industry's broadest selection of antennas for a wide variety of applications. For customers with specialized needs, custom antennas and design services are available along with simulations of antenna performance to speed development. Learn more at www.linxtechnologies.com.

Notes

Linx Technologies
159 Ort Lane
Merlin, OR, US 97532

Phone: +1 541 471 6256
Fax: +1 541 471 6251
www.linxtechnologies.com

Disclaimer

Linx Technologies is continually striving to improve the quality and function of its products. For this reason, we reserve the right to make changes to our products without notice. The information contained in this Data Guide is believed to be accurate as of the time of publication. Specifications are based on representative lot samples. Values may vary from lot-to-lot and are not guaranteed. "Typical" parameters can and do vary over lots and application. Linx Technologies makes no guarantee, warranty, or representation regarding the suitability of any product for use in any specific application. It is Customer's responsibility to verify the suitability of the part for the intended application. At Customer's request, Linx Technologies may provide advice and assistance in designing systems and remote control devices that employ Linx Technologies RF products, but responsibility for the ultimate design and use of any such systems and devices remains entirely with Customer and/or user of the RF products.

LINX TECHNOLOGIES DISCLAIMS ANY AND ALL WARRANTIES OF MERCHANTABILITY AND FITNESS FOR A PARTICULAR PURPOSE. IN NO EVENT SHALL LINX TECHNOLOGIES BE LIABLE FOR ANY CUSTOMER'S OR USER'S INCIDENTAL OR CONSEQUENTIAL DAMAGES ARISING OUT OF OR RELATED TO THE DESIGN OR USE OF A REMOTE CONTROL SYSTEM OR DEVICE EMPLOYING LINX TECHNOLOGIES RF PRODUCTS OR FOR ANY OTHER BREACH OF CONTRACT BY LINX TECHNOLOGIES. CUSTOMER AND/OR USER ASSUME ALL RISKS OF DEATH, BODILY INJURIES, OR PROPERTY DAMAGE ARISING OUT OF OR RELATED TO THE USE OF LINX TECHNOLOGIES RF PRODUCTS, INCLUDING WITH RESPECT TO ANY SERVICES PROVIDED BY LINX RELATED TO THE USE OF LINX TECHNOLOGIES RF PRODUCTS. LINX TECHNOLOGIES SHALL NOT BE LIABLE UNDER ANY CIRCUMSTANCES FOR A CUSTOMER'S, USER'S, OR OTHER PERSON'S DEATH, BODILY INJURY, OR PROPERTY DAMAGE ARISING OUT OF OR RELATED TO THE DESIGN OR USE OF A REMOTE CONTROL SYSTEM OR DEVICE EMPLOYING LINX TECHNOLOGIES RF PRODUCTS.

The limitations on Linx Technologies' liability are applicable to any and all claims or theories of recovery asserted by Customer, including, without limitation, breach of contract, breach of warranty, strict liability, or negligence. Customer assumes all liability (including, without limitation, liability for injury to person or property, economic loss, or business interruption) for all claims, including claims from third parties, arising from the use of the Products. Under no conditions will Linx Technologies be responsible for losses arising from the use or failure of the device in any application, other than the repair, replacement, or refund limited to the original product purchase price. Devices described in this publication may contain proprietary, patented, or copyrighted techniques, components, or materials.

© 2014 Linx Technologies. All rights reserved.

The stylized Linx logo, Wireless Made Simple, CipherLinx, WiSE and the stylized CL logo are trademarks of Linx Technologies.