WowWee

R.E.V.™

ROBOTIC ENHANCED VEHICLES

User Manual

ITEM NO.: 0420

8+ beaconsense™ Bluetooth® SMART POWER UP WITH BATTERIES NOT INCLUDED

INTRODUCTION

Thank you for purchasing R.E.V.™ by WowWee™!

R.E.V.™'s (Robotic Enhanced Vehicles) are next-gen vehicles that are designed for combat. Leave the track behind, and then let the world be your battleground. Equipped with cutting edge Artificial Intelligence and proprietary BeaconSense™ tracking technology, each R.E.V.™ can drive, think, and fight for itself. The R.E.V.™ smart-device application features exciting multiplayer games that let you showcase your skills against your friends or computer controlled opponents. Do you have what it takes?

Take a few minutes to look through this user manual and get R.E.V.™ ready to go.

NOTE: When using R.E.V.™, adult supervision is required, especially when changing the batteries.

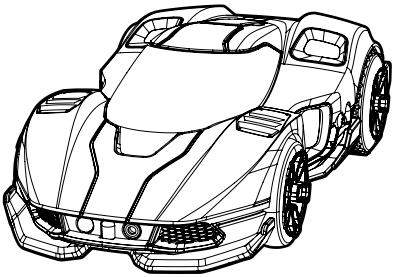

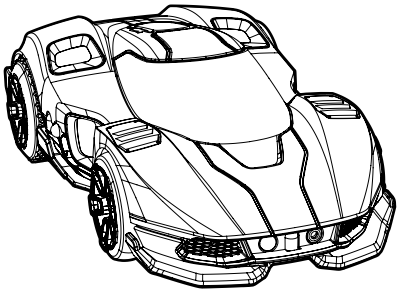

▲ 2 x R.E.V.™

• 1 x User Manual

Please note the following when operating R.E.V.™:

- Do not immerse R.E.V.™ or any parts in water or any other form of liquid.
- Do not drop, throw, or kick the R.E.V.™ vehicles as this may damage mechanical functions.
- Do not allow the vehicles to roam freely or leave unattended near edges from which the R.E.V.™ vehicles could fall.
- R.E.V.™ is intended for indoor use only.
- For best performance, do not use R.E.V.™ on rough or uneven surfaces such as shag carpeting.

BATTERY INFORMATION

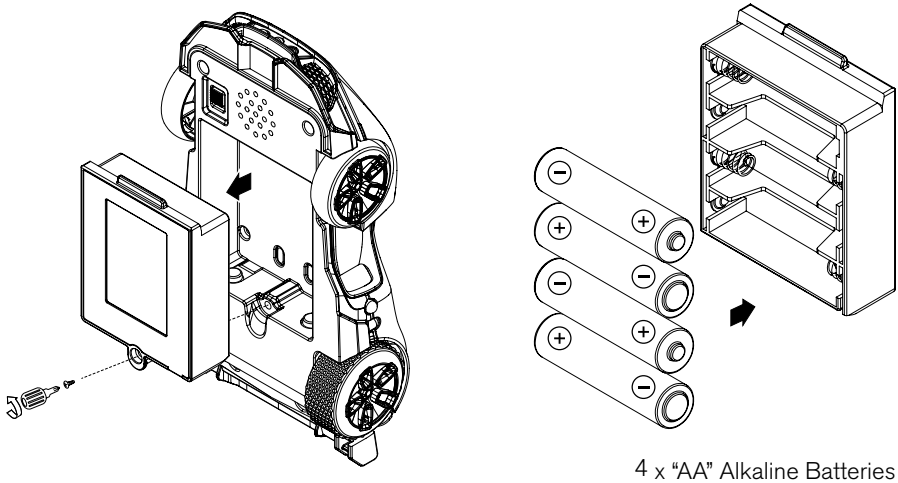

R.E.V.™ Battery Diagram/Installation

Installing or changing batteries in R.E.V.™:

1. To change the batteries, carefully lay the R.E.V.™ vehicle on its top. R.E.V.™ requires 4 x “AA” size alkaline batteries (not included) in each vehicle.

2. Using a Phillips screwdriver (not included) remove the screws on the battery compartment cover located on the bottom of the vehicle.

3. Insert the batteries according to the diagram. Ensure that the positive and negative polarities match the illustrations inside the battery compartment.

4. Replace the battery compartment cover and tighten screws using the screwdriver. Do not over-tighten.

BATTERY INFORMATION

IMPORTANT BATTERY INFORMATION:

- Use only fresh batteries of the required size and recommended type.
- Do not mix old and new batteries, different types of batteries [standard (Carbon-Zinc), Alkaline or rechargeable] or rechargeable batteries of different capacities.
- Remove rechargeable batteries from the toy before recharging them.
- Rechargeable batteries are only to be charged under adult supervision.
- Please respect the correct polarity, (+) and (-).
- Do not try to recharge non-rechargeable batteries.
- Do not dispose of batteries into fire.
- Replace all batteries of the same type/brand at the same time.
- The supply terminals are not to be short-circuited.
- Remove exhausted batteries from the toy.
- Batteries should be replaced by adults.
- Remove batteries if the toy is not going to be played with for some time.

LOW BATTERY INDICATORS:

When the batteries grow weak, the R.E.V.™ vehicle will begin to move slower than normal. When this occurs, power OFF and replace all batteries. For optimal play, replace the batteries on both vehicles at the same time.

NOTE: You will know when R.E.V.™'s batteries are nearly depleted because it will make a low battery indication sound and then power off. You can also see current battery levels via the R.E.V.™ smart device application.

POWER SAVE MODE

POWER SAVE MODE:

After 20 minutes of not recieving any commands or receiving any interactions, the R.E.V.™ vehicle will make a power-down sound, deactivate it's LED Indicator, and power down.

To re-activate, simply turn the power switch from the On to Off then back to On again.

You will need to reconnect your vehicle with your smart device to activate any gameplay.

TOP VIEW

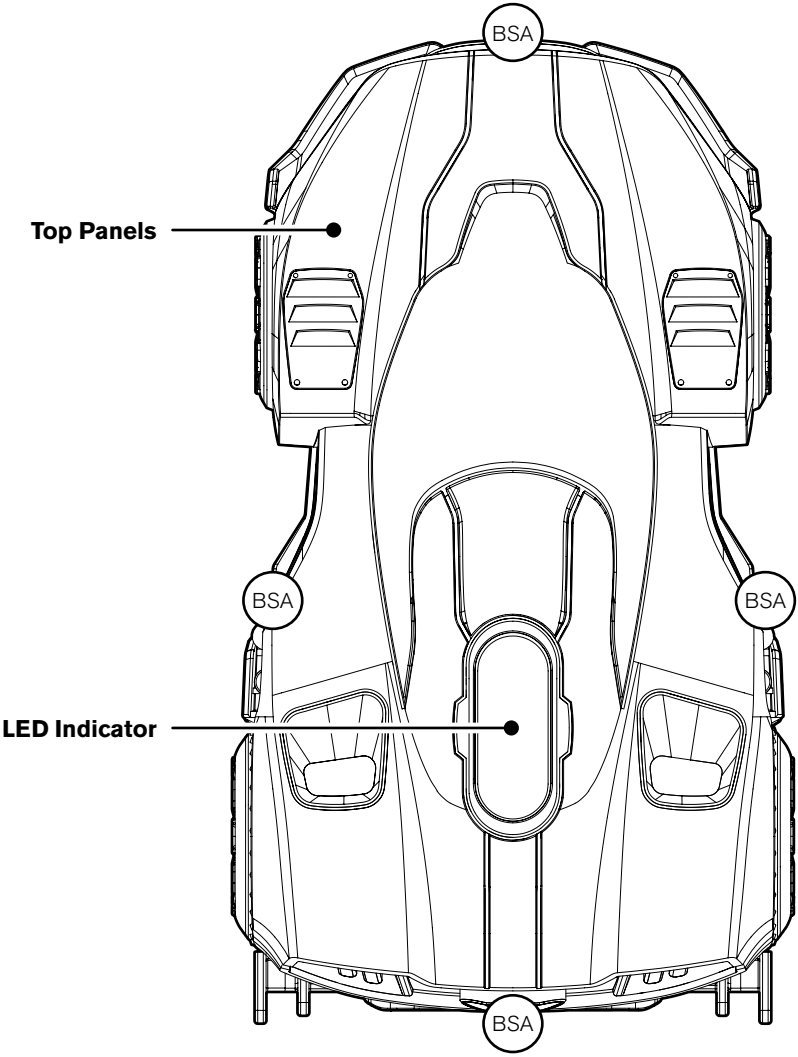

BSA **BeaconSense™ Array**

BOTTOM VIEW

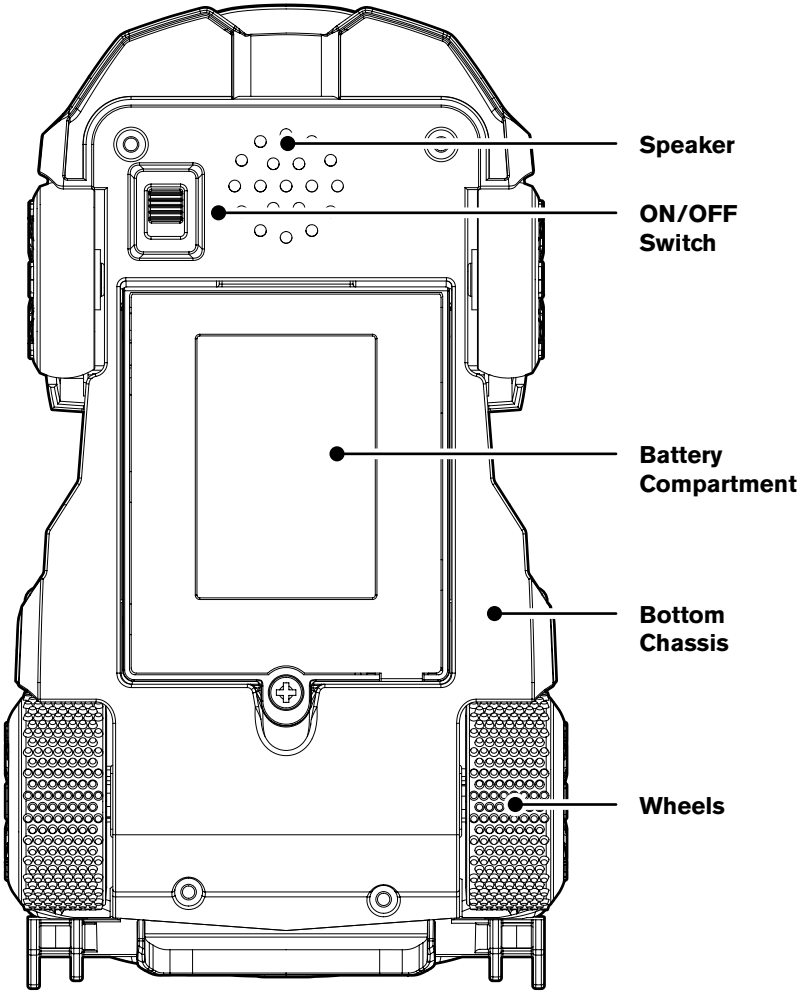
Speaker
ON/OFF Switch
Battery Compartment
Bottom Chassis
Wheels

QUICKSTART & APP

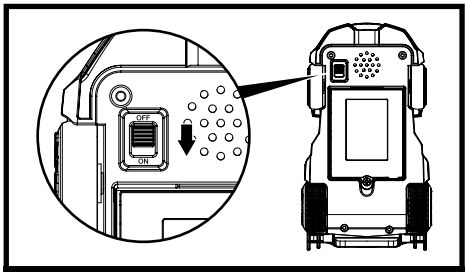

Turn On

1. With the batteries inserted, locate the power switch underneath the R.E.V.™ vehicle and activate R.E.V.™ by toggling it to ON. Do this for all vehicles that you will be playing with. The vehicle will make a Power On sound on successful activation.

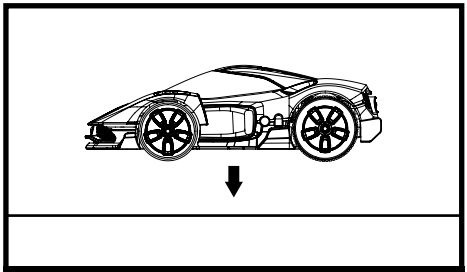

Flat Surface

2. Place the R.E.V.™ vehicles upright on their wheels on a flat and smooth surface, away from edges and obstacles.

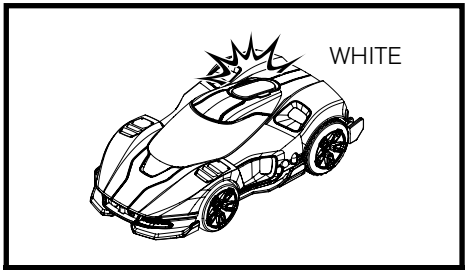

LED Indicator

3. The LED Indicator will pulse white, indicating it is ready for a connection.

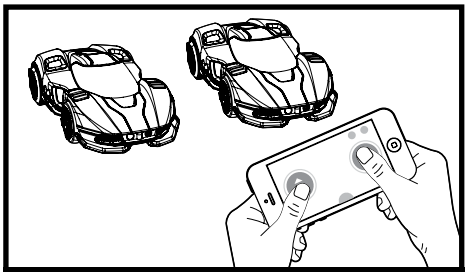

R.E.V.™ App

4. Once all vehicles are in this state, start the application on your smart device and follow the instructions in the application to get started.

APP FUNCTIONALITY

R.E.V.™ works with iPhone® 4s and above, iPod touch® 5G, iPad® 3, iPad® 4, iPad mini™, iPad Air®, or select Android™ Bluetooth® Smart-Ready™ devices. Apple® devices must be running iOS 8 or above. Android™ devices must be running Android™ 4.4.3 or above.

NOTE: The R.E.V.™ vehicles will revert to waiting for a player connection if the application is closed or the signal is lost indicated by a white light on the vehicle. To reconnect, make sure the vehicles are on and then follow the in-app instructions.

Downloading the App
Open a browser and use the following link to find app download links: **www.wowwee.com/rev**
For Apple® Devices: Go to the App Store℠ and search for "WowWee REV". Alternatively, use the following link: **appstore.com/wowweerev**
For Android™ Devices: Go to the Google Play™ or Amazon Appstore™ and search for "WowWee REV".

CONNECTING TO R.E.V.™

Connecting to R.E.V.™ with Computer Controlled Opponents.
1. Ensure all R.E.V.™ items are switched off.
2. Turn on all R.E.V.™ items as instructed in Getting Started (pg 4).
3. Once the app is installed, open the "R.E.V.™" app on your device.
4. Follow the in-app instructions on how to connect to the item, making sure to connect to each item you want to control.
5. Once connected, use the in-app menu to control the gameplay mode.

Connecting to R.E.V.™ with Human Controlled Opponents.
1. Ensure all R.E.V.™ items are switched off.
2. Turn on a single R.E.V.™ item, as instructed in Getting Started (pg 4).
3. Once the app is installed, open the "R.E.V.™" app on your device.
4. Follow the in-app instructions on how to connect to the item, making sure to connect to each item you want to control.
5. Repeat steps 2-4 for each player controlled smart device.

Q&A and Product Support

If you are experiencing difficulties with R.E.V.™, use this troubleshooting guide or visit **www.wowweezone.com** for further support.

Q. My R.E.V.™ won't show up in the app when I try to connect.
A. Make sure your R.E.V.™ item has fresh batteries and is turned on, then close the app and switch Bluetooth® on/off in your smart-device settings. If you are still having problems, try restarting your smart-device completely.

Q. My R.E.V.™ disconnects often or is much slower than usual.
A. This is most likely caused by interference. Ensure that there are no other Bluetooth® devices connected (especially audio devices), as these can cause interference which can cause issues, also make sure that you are standing close to the R.E.V.™ item with no obstacles in the way. If you are still having problems, try turning Wi-Fi off to reduce interference. If you experience further problems, please try connecting with another smart-device.

Q. When I try to download the R.E.V.™ application onto my Android™ phone, it says it's incompatible with my device.
A. R.E.V.™ items only work with smart-devices which are Bluetooth® Smart-Ready™ and running compatible operating systems. Please ensure that your device is smart-ready. If you are still in doubt, check the compatibility list located on our website **www.wowwee.com/rev.**

Q. I cannot access Google Play™ on my device, how can I download the application?
A. Try downloading the application on the Amazon AppStore™ or other free app stores. Please ensure that you are downloading the official free app. You can find app links on **www.wowwee.com/rev**

Q. My R.E.V.™ item turns on, makes a noise then switches off.
A. Most likely the batteries are low or flat, try replacing the batteries in the R.E.V.™ item(s).

Q. My R.E.V.™ vehicle is driving slower than normal or has trouble turning.
A. Ensure that R.E.V.™ is driving on an even surface which is not too slippery or thick (such as shag carpet), if the problem persists, try replacing the batteries.

Q. My R.E.V.™ vehicle sometimes has trouble tracking other R.E.V.™ items.
A. Many things can affect tracking performance, for best results make sure you are playing inside away from direct sunlight or strong fluorescent lights. Ensure that the vehicles are positioned in the middle of a wide open space and there are no obstacles between them and that all items have fresh batteries.

Q. I want to play with my friends, but some modes on the app are not working.
A. Some games are only designed for single player with computer opponents and some can be played with human or computer controlled opponents. Please check carefully in the app to see the recommended play opponents for each game.

Q. The app tried to do a firmware update but it failed during the update process.
A. R.E.V.™ is designed to recover if there are any problems during the update process. If an update failed, switch your device off then on and wait for a few minutes. The vehicle should play the normal start sound. After connecting with a smart-device, the app may prompt you to attempt the update again.

Q. The app crashes or doesn't work properly and my problem isn't listed above.
A. Please contact our Support Team at **www.wowweezone.com**

WARRANTY

WowWee™ 90-Day Limited Warranty

WowWee's warranty obligations for R.E.V.™ (this "Product") are limited to the terms set forth below.

WowWee Group Limited ("WowWee") warrants to the original end-user purchaser that this Product will be free from defects in materials and workmanship under normal use for a period of 90 days from the date of retail purchase (the "Warranty Period"). This warranty is extended only to the original end-user purchaser of a new product that was not sold "as is".

If a defect arises:

(1) you may within 30 days from the date of retail purchase (or such other period specified by the return policies of the place of purchase) return this Product to the place of purchase, together with the original proof of purchase and either the original box or the UPC code label from the box, and this Product will be replaced or, in the event that a replacement for this Product is not available at the place of purchase, either a refund of the purchase price for this Product or a store credit of equivalent retail value will be provided; or

(2) you may after the day that is 30 days from the date of retail purchase (or such other period specified by the return policies of the place of purchase) and within the Warranty Period contact WowWee Customer Support to arrange for the replacement of this Product. In the event that a replacement for this Product is not available this Product will be replaced by WowWee with a product of equivalent or greater retail value.

Notwithstanding the foregoing terms of this warranty, WowWee reserves the right at all times, at its sole option and discretion, to refund to you the purchase price paid by you for this Product in full and final settlement of WowWee's obligations under this warranty.

A purchase receipt or other proof of the date of retail purchase and purchase price is required in order to claim the benefit of this warranty.

If this Product is replaced, the replacement product becomes your property and the replaced Product becomes WowWee's property. If the place of purchase refunds the purchase price of this Product or issues a store credit of equivalent retail value, this Product must be returned to the place of purchase and becomes WowWee's property. If WowWee refunds the purchase price of this Product, this Product must be returned to WowWee and becomes WowWee's property.

EXCLUSIONS AND LIMITATIONS
This warranty covers the normal and intended use of this Product. This warranty does not apply: (a) to damage caused by accident, abuse, unreasonable use, improper handling and care or other external causes not arising out of defects in materials or workmanship; (b) to damage caused by service performed by anyone who is not an authorized representative of WowWee; (c) to any hardware, software or other add-on components installed by the end-user; (d) if this Product has been disassembled or modified in any way; (e) to cosmetic damage, including but not limited to scratches, dents or broken plastic, or normal wear and tear.

THIS WARRANTY GIVES YOU SPECIFIC LEGAL RIGHTS AND YOU MIGHT ALSO HAVE OTHER RIGHTS THAT VARY FROM STATE TO STATE. WOWWEE'S RESPONSIBILITY FOR PRODUCT DEFECTS IS LIMITED TO THE REPLACEMENT OF THIS PRODUCT OR THE REFUND OF THE PURCHASE PRICE FOR THIS PRODUCT. ALL EXPRESS AND IMPLIED WARRANTIES, INCLUDING BUT NOT LIMITED TO ANY IMPLIED WARRANTIES AND CONDITIONS OF MERCHANTABILITY AND FITNESS FOR A PARTICULAR PURPOSE, ARE LIMITED IN TIME TO THE TERM OF THIS LIMITED WARRANTY. NO WARRANTIES, WHETHER EXPRESS OR IMPLIED, WILL APPLY AFTER THE EXPIRATION OF THE LIMITED WARRANTY PERIOD. If any term of this warranty is held to be illegal or unenforceable, the legality or enforceability of the remaining terms shall not be affected or impaired.

EXCEPT AS PROVIDED IN THIS WARRANTY AND TO THE EXTENT PERMITTED BY LAW, WOWWEE IS NOT RESPONSIBLE FOR DIRECT, SPECIAL, INCIDENTAL OR CONSEQUENTIAL DAMAGES HOWSOEVER CAUSED RESULTING FROM BREACH OF WARRANTY OR CONDITION OR UNDER ANY OTHER LEGAL THEORY, INCLUDING BUT NOT LIMITED TO LOSS OF USE. THE FOREGOING LIMITATION SHALL NOT APPLY TO DEATH OR PERSONAL INJURY CLAIMS, OR ANY STATUTORY LIABILITY FOR INTENTIONAL AND GROSS NEGLIGENT ACTS AND/OR OMISSIONS.

SOME STATES DO NOT ALLOW THE EXCLUSION OR LIMITATION OF INCIDENTAL OR CONSEQUENTIAL DAMAGES, OR LIMITATIONS ON HOW LONG AN IMPLIED WARRANTY LASTS, SO THESE LIMITATIONS MIGHT NOT APPLY TO YOU.

Valid only in U.S.A.

R.E.V.™

ROBOTIC ENHANCED VEHICLES

Manufactured and distributed by
© 2014 WowWee Group Limited.

Product names, designations, and logos are trademarks or registered trademarks of WowWee Group Limited.

All Rights Reserved.

Customer Service website: www.wowweezone.com

We recommend that you retain our address for future reference.

Product and colors may vary.

Packaging printed in China.

WARNING! This product is not suitable for children under 3 years because of small parts - choking hazard.

Apple, the Apple logo, iPhone, iPad, and iPod touch are trademarks of Apple Inc. Registered in the U.S. and other countries. App Store is a service mark of Apple Inc.

Android and Google Play are trademarks of Google Inc.

MADE IN CHINA.

CAUTION
Changes or modifications not expressly approved by the party responsible for compliance could void the user's authority to operate the equipment.

Download on the App Store

ANDROID APP ON Google play

NOTE
This equipment has been tested and found to comply with the limits for a class B digital device, pursuant to part 15 of the FCC rules. These limits are designed to provide reasonable protection against harmful interference in a residential installation. This equipment generates, uses and can radiate radio frequency energy and, if not installed and used in accordance with the instructions, may cause harmful interference to radio communications.

However, there is no guarantee that interference will not occur in a particular Installation. If this equipment does cause harmful interference to radio or television reception, which can be determined by turning the equipment off and on, the user is encouraged to try and correct the interference by one or more of the following measures:

- Reorient or relocate the receiving antenna
- Increase the separation between the equipment and receiver
- Connect the equipment into an outlet on a circuit different from that to which the receiver is connected
- Consult the dealer or experienced radio/TV technician for help

This Device complies with Part 15 of the FCC Rules. Operation is subject to the following two conditions:
(1) This device may not cause harmful interference, and
(2) This device must accept any interference received, including interference that may cause undesired operation.

This device complies with Industry Canada Licence-exempt RSS-210. Operation is subject to the following two conditions:
(1) This device may not cause interference, and
(2) This device must accept any interference, including interference that may cause undesired operation of the device.

For these purposes, the party responsible is:

WowWee USA Inc.
875 Prospect Street
Suite 204A
La Jolla, CA 92037

1-800-310-3033

WARNING! This equipment may experience difficulty and/or memory loss when subjected to any electrostatic discharge, radio frequency interference, or sudden power surge/interruption. The user is encouraged to reset the equipment should any of these occur.

WowWee

WowWee Group Limited
Energy Plaza, 301A-C
92 Granville Road
T.S.T. East, Hong Kong

WowWee Canada Inc.
3700 Saint Patrick Street,
Suite 206,
Montreal, QC, H4E 1A2, Canada

0420US01TOP_IML