CRAIG®

STEREO EARPHONES WITH BLUETOOTH® WIRELESS TECHNOLOGY

S L E
DCC
CONTROL COPY
ISSUE
2015.08.10
09:28:48
+08'00'

Owner's Manual

PLEASE READ BEFORE OPERATING THIS EQUIPMENT.

Model: CBH515-OD

Size: 148.5(W) x 210(H)mm (A5)

FCC INFORMATION:

This equipment has been tested and found to comply with the limits for a Class B digital device, pursuant to part 15 of the FCC Rules.These limits are designed to provide residential protection against harmful interference in a residential installation. This equipment generates, uses and can radiate radio frequency energy and, if not installed and used in accordance with the instructions, may cause harmful interference to radio communications. However, there is no guarantee that interference will not occur in a particular installation. If this equipment does cause harmful interference to radio or television reception, which can be determined by turning the equipment off and on, the user is encouraged to try to correct the interference by one or more of the following measures:

- Reorient or relocate the receiving antenna.
- Increase the separation between the equipment and receiver.
- Connect the equipment into an outlet on the circuit different from that to which the receiver is connected.
- Consult the dealer or an experienced radio/TV technician for help.

The device has been evaluated to meet general RF exposure requirement.
The device can be used in portable exposure condition without restriction.

This device complies with Part 15 of the FCC Rules.
Operation is subject to the following two conditions:
(1)This device may not cause harmful interference, and
(2)This device must accept any interference received,
including interference that may cause undesired operation.

FCC NOTICE:

To assure continued compliance, follow the attached installation instructions and use only shielded cables when connecting to other devices. Modifications not authorized by the manufacturer may void user’s authority to operate this device.

Location of Controls

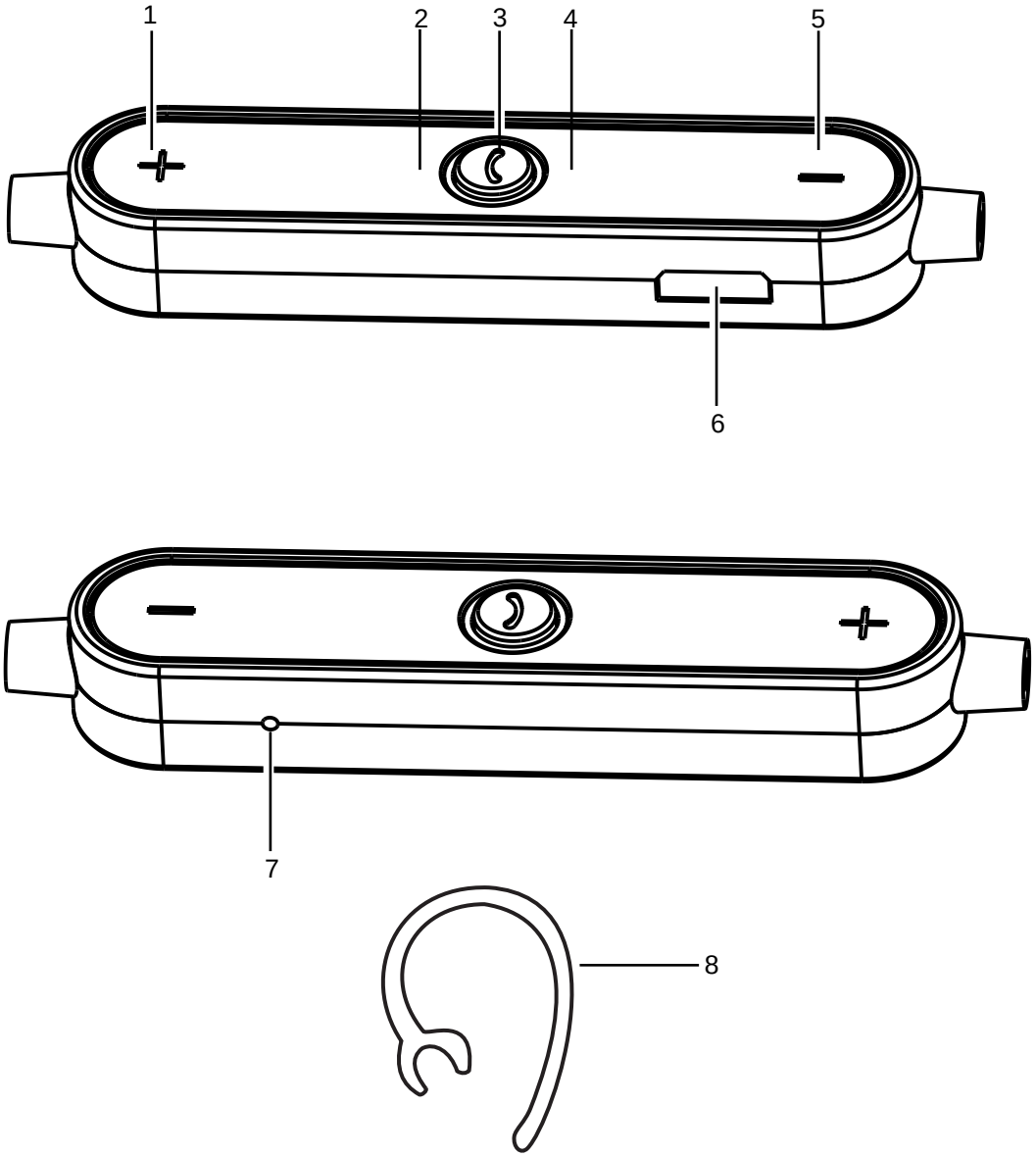

1. + Button
2. Blue Indicator
3. Button
4. Red Indicator
5. - Button
6. Micro USB Port (For Charging Only)
7. Built-in Microphone
8. Ear Hook

Hooks installation:

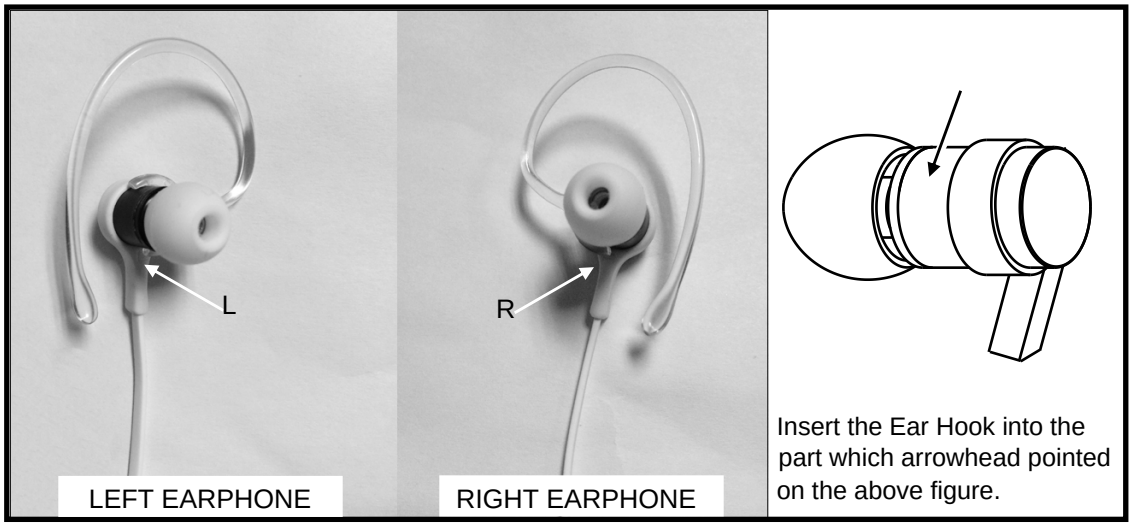

Battery Recharge:

The unit has a built-in DC ⎓ 3.7V Li-ion rechargeable battery, recharges it before use or when the battery is consumed as follow:

1. Connect the Micro USB plug from the USB connection cable to the Micro USB Port on the unit.
2. Connect the full size USB plug from the USB connection cable to the USB Port on a computer or any USB charger having DC 5V output.
3. During charging, the Red Indicator will illuminate. When finished, Red Indicator will turn off and Blue Indicator will illuminate.

NOTES:

Your battery will last longer if you follow these simple guidelines for charging and storing.

A. Recharge and store the device within the temperature range of 5°C ~35°C (40°F ~95°F).

B. Do not overcharge (longer than 24 hours). Excessive charging or discharging may shorten the battery's life.

C. Battery life naturally shortens slowly over time.

D. The rechargeable battery incorporated in this product is not replaceable.

J L E DCC CONTROL COPY ISSUE
2015.08.10 09:29:08 +08'00'

Operation:

The first time you use the unit or pair it to a new Bluetooth device, follow these instructions:

1. Press and hold the Button approx. 6 seconds until the Blue and Red Indicators illuminate and blink.
2. Power on the external BT device and enter to BT searching mode. Start pairing following the on screen instructions from the external BT device. After pairing, the Red Indicator will not light and the Blue Indicator will stop blinking. (For details pairing procedures, please refer to the user's manual of your BT device.)

Notes:

- When the external BT device searched the unit, our model number "CBH515" will appear appear on the display of external BT device.
- Pairing code "0000" or "1234" may need to enter.

DCC CONTROL COPY
ISSUE
2015.08.10
09:29:14
+08'00'

Normal operation after pairing:

1. Power on the external BT device and enter BT mode.
2. Press and hold the Button approx. 5 seconds until the Blue Indicator is illuminate and blink then release the button. Wait a few seconds until the unit automatically paired to the external BT device. (The Blue Indicator will stop blinking.)
3. Plays the music in the paired BT device as usual. (Make sure the sound level of the BT paired Device is set to high. Otherwise, sound from this unit is weak.)
4. During playback:
   - Press and hold the "-" or "+" Buttons to adjust volume level.
   - Press the Button to pause, press again to resume normal playback.
   - Press and release the "-" or "+" Buttons repeatedly to skip tracks.
5. If the unit i spaired to cell phone:
   - When you receive an incoming call while listening to music, press the Button to pause the music then speak into the built-in Microphone to answer the call. When your call is complete, press the Button to end the call and resume to the music playback.
   - Press and hold the Button approx. 1 second to reject incoming call.
   - Press the Button twice to redial the last dialed phone number.
6. To shut off the unit, press and hold the Button approx. 4 seconds until the Red Indicator is illuminate then release the button to shut off the unit.

Specifications:

Power Source:.....Built-in DC ⎓ 3.7V; 70 mAH (0.259WH) rechargeable Li-ion battery, recharge by DC ⎓ 5V through Micro USB Port

Play time after fully charge:.....Approximate 3.5 Hours

Bluetooth version:.....Bluetooth 4.1+EDR

Impedance of Earphone:.....16 ohm, 5mW x 2

Audio power:.....4mW per channel

BT effective range:.....32 Feet in open area

Accessories:

1 x User's Manual
1 x USB Connection Cable (for charge only)
1 x Earphone Hooks (1 pair)
1 x Spare Ear Cushion (1 pair)

SPECIFICATIONS AND ACCESSORIES ARE SUBECT TO CHANGE WITHOUT NOTICE

J L E
DCC
CONTROL COPY
ISSUE
2015.08.1
0 09:29:19
+08'00'

LIMITED WARRANTY

Craig warrants this product to be free from manufacturing defects in material and workmanship under normal use for a period of 90 days from date of purchase. If service is required, please return the product to the store where it was purchased for exchange; or, pack the unit in the original packing material with all accessories if applicable, a copy of your sales receipt and a Cashier's check or Money Order for $10.00 (to cover shipping and handling costs) payable to Craig Electronics Inc. For consumers in Canada, please make sure that the cashier check or money order is redeemable through a U.S. bank. Ship your product freight pre-paid. Your unit will be repaired, replaced or if the unit can not be repaired or replaced, a refund will be forwarded to you within four weeks of receipt of your unit. Please ship your unit to:

Craig Electronics Inc.
1160 NW 163 Drive
Miami, Fl 33169

This warranty is void if the product has been: a) Used in a commercial application or rental. b) Damaged through misuse, negligence, or abuse. c) Modified or repaired by anyone other than an authorized Craig service center. d) Damaged because it is improperly connected to any other equipment.
Note: This warranty does not cover: a) Ordinary adjustments as outlined in the Owner's Manual which can be performed by the customer. b) Damage to equipment not properly connected to the product. c) Any cost incurred in shipping the product for repair. d) Damage to the product not used in the USA.

This warranty is not transferable and only applies to the original purchase. Any implied warranties, including the warranty of merchantability, are limited in duration to the period of this expressed warranty and no warranty whether expressed or implied shall apply to the product thereafter.

Under no circumstance shall Craig be liable for any loss or consequential damage arising out of the use of this product. This warranty gives specific legal rights. However, you may have other rights which may vary from state to state. Some states do not allow limitations on implied warranties or exclusion of consequential damage. Therefore, these restrictions may not apply to you.

To Obtain Service on your Product
email:service@craigelectronics.com

S L E
DCC
CONTROL COPY
ISSUE
2015.08.10
09:29:25
+08'00'

Printed in China

CBH515-OD_WC_E0CL5_A0US

Size: 148.5(W) x 210(H)mm (A5)