说明书
大小: 100*100mm
材质: 80g书纸
颜色: 黑白印刷
用量: 1pc

品号3020328001

JBL®
by HARMAN

BS-2708

OWNER'S MANUAL

IMPORTANT SAFETY INSTRUCTIONS

CAUTION: TO REDUCE THE RISK OF ELECTRIC SHOCK, DO NOT REMOVE COVER (OR BACK). NO USER SERVICEABLE PARTS INSIDE. REFER SERVICING TO QUALIFIED SERVICE PERSONNEL.

DANGEROUS VOLTAGE: The lightning flash with arrowhead symbol within an equilateral triangle is intended to alert the user to the presence of uninsulated dangerous voltage within the product`s enclosure that may be of sufficient magnitude to constitute a risk of electric shock to persons.

ATTENTION: The exclamation point within an equilateral triangle is intended to alert the user to the presence of important operating and maintenance (servicing) instructions in the literature accompanying the appliance.

FCC NOTICE

This device complies with Part 15 of the FCC Rules. Operation is subject to the following two conditions: (1) this device may not cause harmful interference, and (2) this device must accept any interference received, including that may cause undesired operation.

NOTE: This equipment has been tested and found to comply with the limits for a Class B digital device, pursuant to Part 15 of the FCC Rules. These limits are designed to provide reasonable protection against harmful interference in a residential installation. This equipment generates, uses, and can radiate radio frequency energy and, if not installed and used in accordance with the instructions, may cause harmful interference to radio communications. However, there is no guarantee that interference will not occur in a particular installation. If this equipment does cause harmful interference to radio or television reception, which can be determined by turning the equipment on and off, the user is encouraged to try to correct the interference by one or more of the following measures:

- Reorient or relocate the receiving antenna.
- Increase the separation between the equipment and receiver.
- Connect the equipment into an outlet on a circuit different from that to which the receiver is connected.
- Consult the dealer or an experienced radio/TV technician for help.

WARNING: Any changes or modifications not expressly approved by the party responsible for compliance could void the user's authority to operate this equipment.
The device must not be colocated or operating in conjunction with any other antenna or transmitter.
To maintain compliance with the FCC's RF exposure guidelines, place the product at least 20cm from nearby persons.

Before using the unit, be sure to read all operating instructions carefully. Please note that these are general precautions and may not pertain to your unit.

1. Read these instructions
All the safety and operating instructions should be read before the product is operated.
2. Keep these instructions
The safety and operating instructions should be retained for future reference.
3. Heed all warnings
All warnings on the product and in the operating instructions should be adhered to.
4. Follow all instructions
All operating and use instructions should be followed.
5. Do not use this apparatus near water
Do not use this product near water or moisture, for example: near a bathtub, washbowl, kitchen sink, laundry tub, swimming pool, or a wet basement.
6. Clean only with dry cloth
Unplug this product from the wall outlet before cleaning. Do not use liquid cleaners or aerosol cleaners. Use a dry cloth for cleaning.
7. Ventilation
The appliance should not be situated so that its location (on a bed, sofa, rug, or similar surface) or position (such as a bookcase or cabinet) interferes with its proper ventilation.
8. Heat
The appliance should be situated away from heat sources such as radiators, heat registers, stoves, or other appliances (including amplifiers) that produce heat.
9. Grounding or Polarization
Precaution should be taken to insure that the grounding or polarization means of an appliance is not defeated.
10. Power-Cord Protection
Power supply cords should be routed so that they are not likely to be walked on or pinched by items placed upon or against them, paying particular attention to cords at plugs, convenience receptacles, and the point at which they exit from the appliance.
11. Replacement Parts
When replacement parts are required, be sure the service technician has used replacement parts specified by the manufacturer. Unauthorized substitutions may result in fire, electric shock or other hazards
12.Severe weather
In extreme weather such as lightning storm, hurricane, unplug it from the wall outlet and disconnect the antenna or cable system. This will prevent damage to the appliance due to unexpected power surges.

13. Servicing

The user should not attempt to service the appliance beyond that described in the user's operating instructions. All other servicing should be referred to qualified personnel. The appliance should be serviced by qualified service personnel when:

· The power-supply cord or plug has been damaged.
· Objects have fallen into, or liquid has been spilled into the appliance enclosure.
· The appliance has been exposed to rain.
· The appliance has been dropped, or the enclosure damaged.
· The appliance does not appear to operate normally or exhibits a marked change in performance.

14. Power Sources

The appliance should be connected to a power supply only of the type described in the operating instructions or as marked on the appliance.

15. Non-use Periods

The power cord of the appliance should be unplugged from the outlet/The batteries should be removed when the appliance is to be left unused for a long period of time.

TABLE OF CONTENTS

IMPORTANT SAFETY INSTRUCTIONS	2
1. INTRODUCTION	6
2. WHAT'S IN THE BOX	6
3. PRODUCT OVERVIEW	7
4. SPEAKER/POWER WIRE SOCKET DIAGRAM	8
5. MOUNTING	9
6. BLUETOOTH OPERATION	10
7. PLAYING TV SOUND THROUGH THE AURA-BT	10
8. USB PLAYBACK	11
9. ZONE A/ZONEB SPEAKERS OPERATION	11
10. LED BEHAVIOR AROUND KNOB	12
11. RESTORE FACTORY SETTINGS	12
12. TROUBLESHOOTING	13
13. PRODUCT SPECIFICATIONS	14

1. INTRODUCTION

Thank you for purchasing the JBL AURA-BT STEREO which is designed to bring an extraordinary sound experience to your entertainment system. We encourage you to take a few minutes to read through this manual, which describes the product and includes step-by-step instructions for setting up and getting started.

2. WHAT'S IN THE BOX

Unpack the box carefully and ensure that the following parts are included.

JBL AURA-BT STEREO

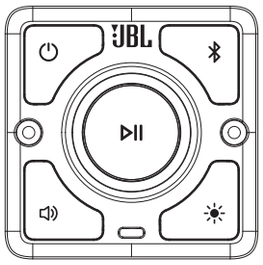

Wire harness for speaker and power supply

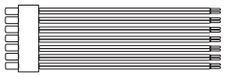

User manual

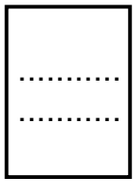

DC harness

Quick Start Guide

Screws X 2

3. PRODUCT OVERVIEW

Controls and Features

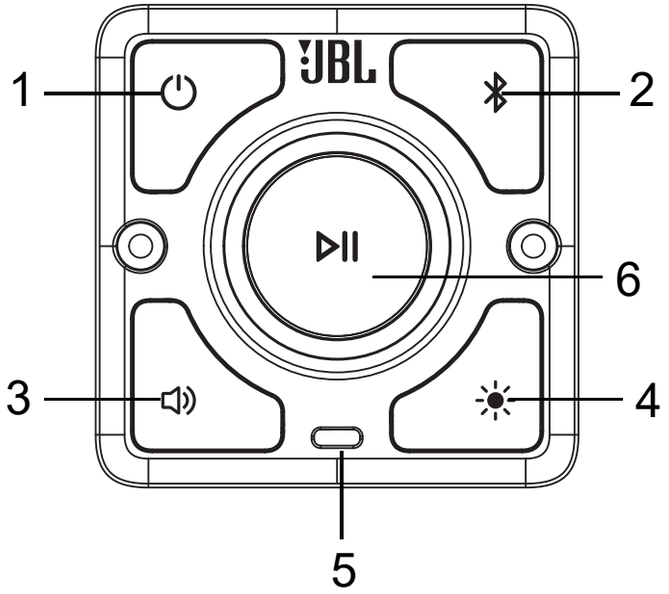

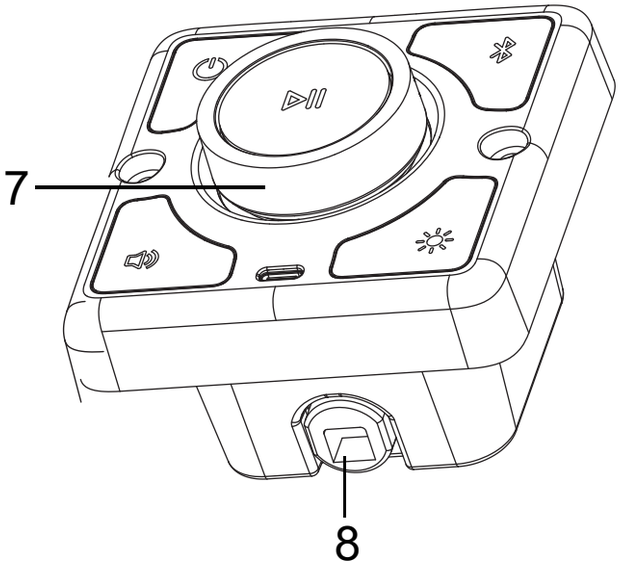

Connectors

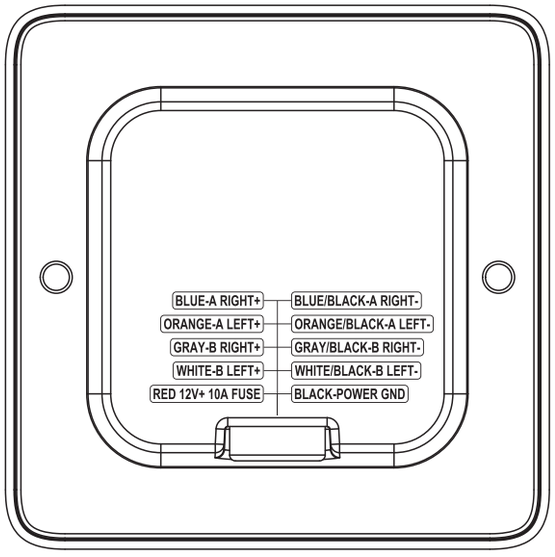

1 Power Button
2 Pair Button
3 Sound/Zone Button
4 Light Effect Button
5 USB Type C Port
6 Play/Pause Multi-Function Button
7 Volume Knob
8 Wire Harness Outlet

4. SPEAKER/POWER WIRE SOCKET DIAGRAM

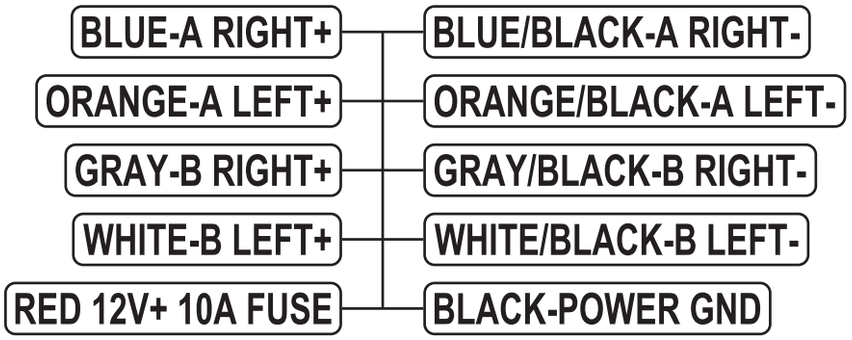

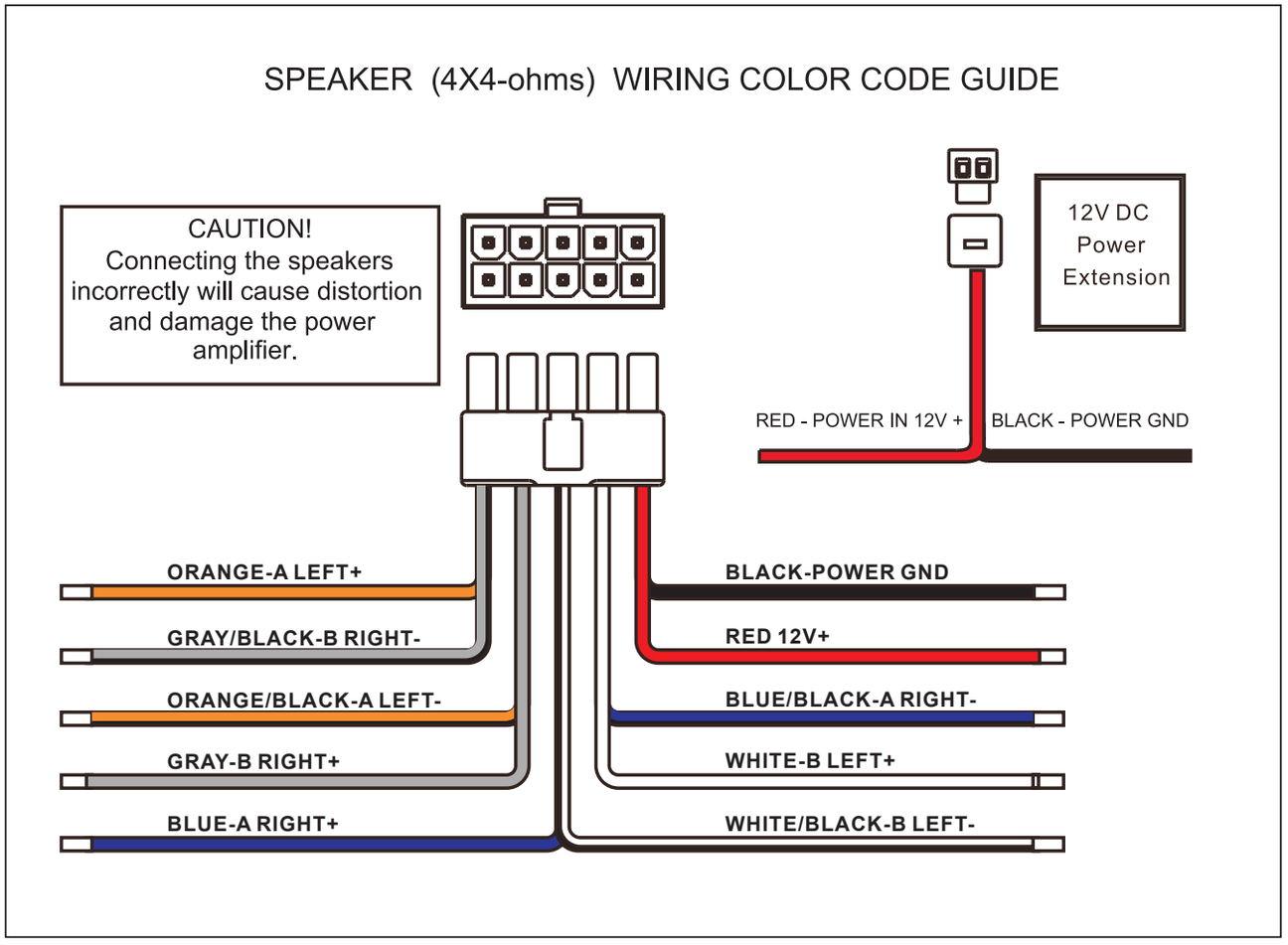

5. MOUNTING

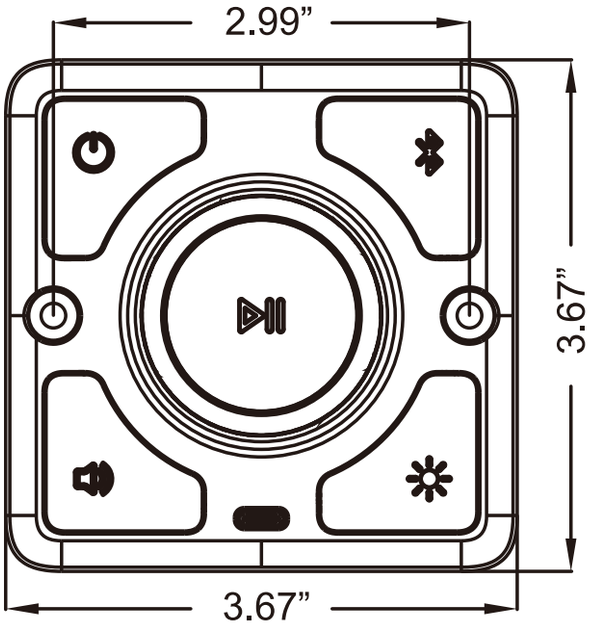

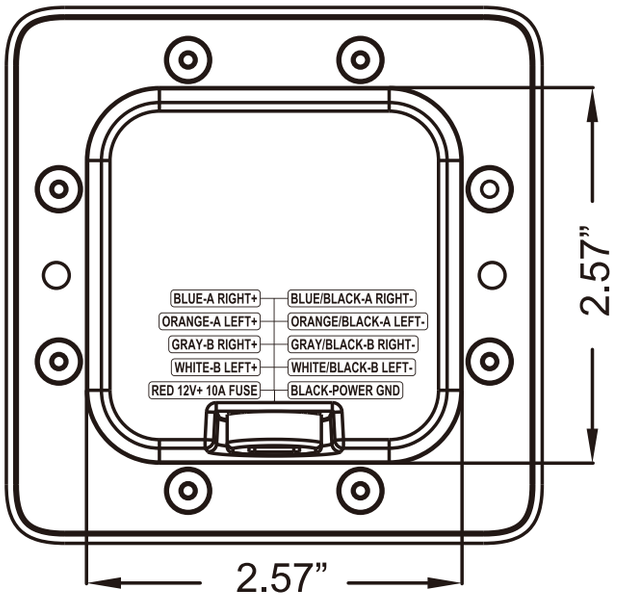

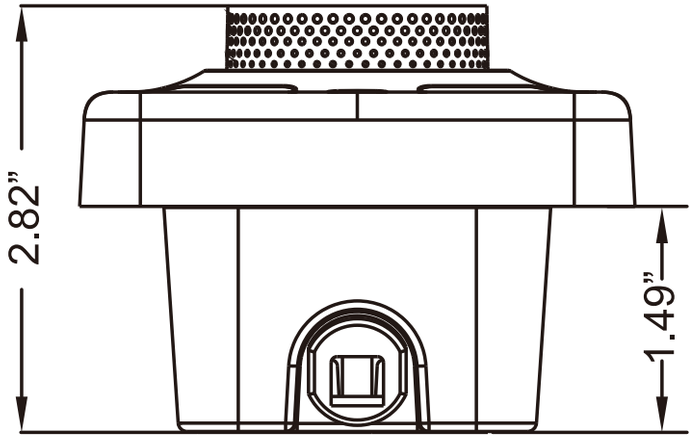

CABINET OR WALL ROUGH OPENING CUT-OUT

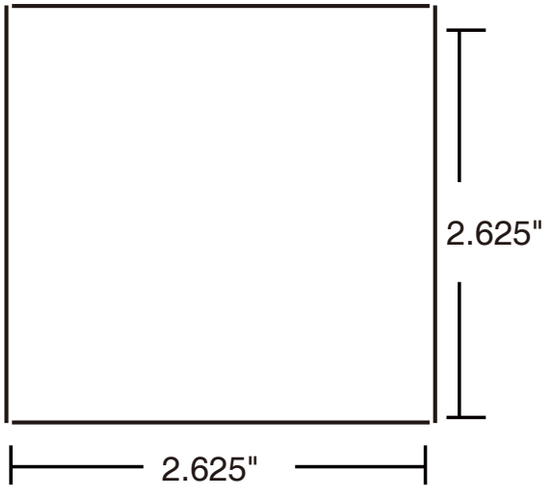

6. BLUETOOTH OPERATION

1. Power ON the AURA-BT.
2. Turn on the Bluetooth compatible device and enter pairing mode.
3. When the Bluetooth device finds the unit, "JBL BT" will appear on the display of the device, select it to make the connection.
4. During Playback:
   Short press ▷II button on the front panel to pause playback, short press ▷II button again to resume playback.
   Quick short press ▷II button twice on the front panel to play next track, quick short press ▷II button three times to play previous track.
   Rotate the volume knob right on the front panel to increase the volume, rotate the volume knob left to decrease the volume.
5. To pair another Bluetooth Device, disconnect the current paired device by pressing the ᛒ button on the front panel. The unit now can be discovered by other Bluetooth devices.

Note:
After first time pairing, the unit will connect to the last paired Bluetooth Device when both are within working range.

7. PLAYING TV SOUND THROUGH THE AURA-BT

Hearing TV sound through the AURA-BT is possible when using a compatible SMART TV that has a sound out via Bluetooth. Place the AURA-BT in the Bluetooth pairing/ discoverable mode, then open the TV settings menu for sound out, select Bluetooth, and do a device search to select “JBL-BT”. Adjust the volume on the TV and/or the AURA-BT to hear TV sound through the connected speakers.

8. USB PLAYBACK

1. Power ON the AURA-BT.
2. Plug a USB device into the USB Type C port on the front panel.
3. During Playback:
   Short press ▷|| button on the front panel to pause playback, short press ▷|| button again to resume playback.
4. Quick short press ▷|| button twice on the front panel to play next track, quick short press ▷|| button three times to play previous track.
5. Rotate the volume knob right on the front panel to increase the volume, rotate the volume knob left to decrease the volume.

Notes:
The unit will automatically switch to USB mode and start playback when the USB flash drive is connected. Disconnect USB to allow Bluetooth to connect.

The USB Type C port can provide external charging (10W/2.1A), and also for software upgrade use.

9. ZONE A/ZONEB SPEAKERS OPERATION

1. Press Sound button on the front panel to switch ON or OFF the corresponding Zone A and Zone B Speakers. Zone A speakers are the default mode, when the unit is turned on.
2. Press Sound button once, both Zone A and Zone B speakers are on.
3. Press Sound button second time, Zone B speakers are on.
4. Press Sound button third time, Zone A speakers are on.

10. LED BEHAVIOR AROUND KNOB (Lighting Effect)

1. Press ☀ button on the front panel to change the visualization of the AURA-BT lighting (Bright/Dim/Off), selected mode will retain in memory until changed.
2. Blue "Pulsing" - BT Pairing Mode, Blue "Solid" - Paired to a Device

11. RESTORE FACTORY SETTINGS

By restoring the default settings defined at the factory, you remove all personalized settings from the AURA-BT Wall Mount Stereo.

1. Power ON the AURA-BT
2. Press ☀ button for at least 10 seconds on the front panel to restore AURA-BT to factory settings.

12. TROUBLESHOOTING

Never try to repair the product yourself. If you have problems using this product, check the following before you request services.

System

The AURA-BT will not turn on.

- Check for properly connected power.

The AURA-BT has no response to button pressing.

- Restore the AURA-BT to factory settings.

Sound

No sound from the AURA-BT

- Make sure speakers are connected properly
- Make sure volume is turned up
- Connect the AURA-BT to your TV or other devices properly.
- Restore the AURA-BT to its factory settings.

Bluetooth

A device cannot be connected with the AURA-BT.

- Check if you have enabled Bluetooth on the device.
- If the AURA-BT has been paired with another Bluetooth device, press button on front panel.
- If your Bluetooth device has ever been paired with the AURA-BT unpair the AURA-BT from the Bluetooth device, and then pair the Bluetooth device to the AURA-BT again.

Poor audio quality from a connected Bluetooth device

- The Bluetooth reception is poor. Move the source device closer to the AURA-BT, or remove any obstacle between the source device and the AURA-BT.

The connected Bluetooth device connects and disconnects constantly.

- The Bluetooth reception is poor. Move the source device closer to the AURA-BT, or remove any obstacle between the source device and the soundbar.

13. PRODUCT SPECIFICATIONS

General specification:
Power supply: 10 -14V,10A
Total speaker power output
(Max.@THD 10%): 82W
Zone A Output power
(Max.@THD 10%): 2x18W
Zone B Output power
(Max.@THD 10%): 2x18W

USB specification:
Supporting file format: mp3
Wireless specification:
Bluetooth version: 5.3
Bluetooth working range: up to 10 meters

Dimension:
AURA-BT: L3.67"*W3.67"H2.82" (Rough Install Opening: 2.625 " x 2.625 " x 1.5 ")

RIVERPARK
www.riverparkinc.com
© 2023 RIVERPARK Inc.