MAGNAVOX

RETRO BLUETOOTH® SPEAKER

with Dual Alarm Clock functionality

OWNER'S MANUAL

PLEASE READ BEFORE OPERATING THIS EQUIPMENT.

MODEL: MCR41818

Size: 148.5(W) x 210(H)mm (A5)

IMPORTANT SAFETY INSTRUCTIONS

CAUTION

RISK OF ELECTRIC SHOCK
DO NOT OPEN

CAUTION: TO REDUCE THE RISK OF ELECTRIC SHOCK, DO NOT REMOVE COVER (OR BACK). NO USER-SERVICEABLE PARTS INSIDE. REFER SERVICING TO QUALIFIED SERVICE PERSONNEL.

The lighting flash with arrowhead symbol, within an equilateral triangle, is intended to alert user to the presence of uninsulated "dangerous voltage" within the product's enclosure, that may be of sufficient magnitude to constitute a risk of electric.

The exclamation point within an equilateral triangle is intended to alert the user to the presence of important operating and maintenance (servicing) instruction in the literature accompanying the appliance.

FCC Warnings

FCC Caution:
This device complies with part 15 of the FCC Rules. Operation is subject to the following two conditions:(1) this device may not cause harmful interference, and (2) this device must accept any interference received, including interference that may cause undesired operation.
Any changes or modifications not expressly approved by the party responsible fo r compliance could void the user's authority to operate the equipment.
NOTE: This equipment has been tested and found to comply with the limits for a Class B digital device, pursuant to Part 15 of the FCC Rules. These limits are designed to provide reasonable protection against harmful interference in a residential installation. This equipment generates, uses and can radiate radio frequency energy and, if not installed and used in accordance with the instructions, may cause harmful interference to radio communications. However, there is no guarantee that interference will not occur in a particular installation.
If this equipment does cause harmful interference to radio or television reception ,which can be determined by turning the equipment off and on, the user is encouraged to try to correct the interference by one or more of the following measures:
-- Reorient or relocate the receiving antenna.
-- Increase the separation between the equipment and receiver.
-- Connect the equipment into an outlet on a circuit different from that to which the receiver is connected.
-- Consult the dealer or an experienced radio/TV technician for help.
To maintain compliance with FCC's RF Exposure guidelines, This equipment should be installed and operated with minimum distance between 20cm the radiator your body: Use only the supplied antenna.

FCC NOTICE:

To assure continued compliance, follow the attached installation instructions and use only shielded cables when connecting to other devices. Modifications not authorized by the manufacturer may void user's authority to operate this device.

Before using the unit, be sure to read all operating instructions carefully. Please note that these are general precautions and may not pertain to your unit. For example, this unit may not have the capability to be connected to an outdoor antenna.

1. **Read these instructions**
   All the safety and operating instructions should be read before the product is operated.
2. **Keep these instructions**
   The sately and operating instructions should be retained for future reference.
3. **Heed all warning**
   All warnings on the product and in the operating instructions should be adhered to.
4. **Follow all instructions**
   All operating and use instructions should be followed.
5. **Do not use this apparatus near water**
   Do not use the product near water and noisture, for example: near a bathtub,washbowl, kithen sink or laundry tub; in a wet basement; or near a swimming pool.
6. **Clean only with dry cloth**
   Unplug this product from the wall outlet before cleaning. Do not use liquid cleaners or aerosol cleaners. Use a dry cloth for cleaning.
7. **Do not block any ventilation openings. Install in accordance with the manufacturer's instructions.**
   Slots and openings in the cabinet and in the back or bottom are provided for ventilation, to ensure reliable operation of the product and to protect it from overheating. These openings must not be blocked or covered. The openings should never be blocked by placing the product on a bed, sofa, rug or other similar surface. this product should never be placed near or over a radiator or heat source. This product should not be placed in a built-in installation such as a bookcase or rack unless proper ventilation is provided or the manufacturer's instructions have been adhered to.
8. **Do not install near any heat sources such as radiators, heat registers, stoves, or other apparatus (including amplifiers) that produce heat.**
9. **Do not defeat the safety purpose of the polarized or grounding-type plug. A polarized plug has two blades with one wider than the other. a grounding type plug has two blades and a third grounding prong. the wide blade or the third prong are provided for your safety. if the provided plug does not fit into your outlet, consult an electrician for replacement of the obsolete outlet.**
10. **Protect the power cord from being walked on or pinched particularly at plugs,convenience receptacles, and the point where they exit from the apparatus.**
11. **Only use attachments/accessories specified by the manufacturer.**

IMPORTANT SAFETY INSTRUCTIONS

12. **Unplug this apparatus during lightning storms or when unused for long periods of time.**

13. **Refer all servicing to qualified service personnel. Servicing is required when the apparatus has been damaged in any way, such as power-supply cord or plug is damaged, liquid has been spilled or objects have fallen into the apparatus, the apparatus has been exposed to rain or moisture does not operate normally, or has been dropped.**

14. **Power Source**
The product should be operated only from the type of power source indicated on the marking label. If you are not sure of the type of power supply to your home, consult your appliance dealer or local power company. For products intended to operate from battery power, or other sources, refer to the operating instructions.

15. **Overloading**
Do not overload wall outlets and extension cords as this can result in a risk or fire or electric shock.

16. **Object and liquid entry**
Never push objects of any kind into the product through as they may touch dangerous voltage points or short out parts that could result in fire or electric shock.
Never spill or spray any type of liquid on the product.

17. **Service**
Do not attempt to service this product yourself as opening or removing covers may expose you to dangerous voltage or other hazards. Refer all servicing to qualified service personnel.

18. **Replacement parts**
When replacement parts are required, be sure the service technician uses replacement parts specified by the manufacturer or those that have the same characteristics as the original part. Unauthorized substitutions may resu in fire or electric shock or other hazards.

19. **Safety check**
Upon completion of any service or repairs to this product ask the service technician to perform safety checks to determine that the product is in proper operating conditi

20. **Damage requiring service**
Unplug the product from the wall outlet and refer servicing to qualified service personnel under the following conditions:
   a. When the power-supply cord or plug is damaged.
   b. If liquid has been spilled or objects have fallen into the product.
   c. If the product has been exposed to rain or water.
   d. If the product does not operate normally by following the operating instructions.
   Adjust only those controls that are covered by the operating instructions, as an adjustment of other controls may result in damage and will require extensive work by a qualified technician to restore the product to its normal operation.
   e. If the product has been dropped or the cabinet has been damaged.
   f. When the product exhibits a distinct change in performance – this indicates a need for service.

Note:
Refer all servicing to qualified service personnel. Servicing is required when the unit has been damaged any way such as the following: the power-supply cord or plug has been damaged, liquid has been spilled into the unit, the unit has been exposed to rain or moisture, the unit has been dropped or the unit does not operate normally.

PARTS

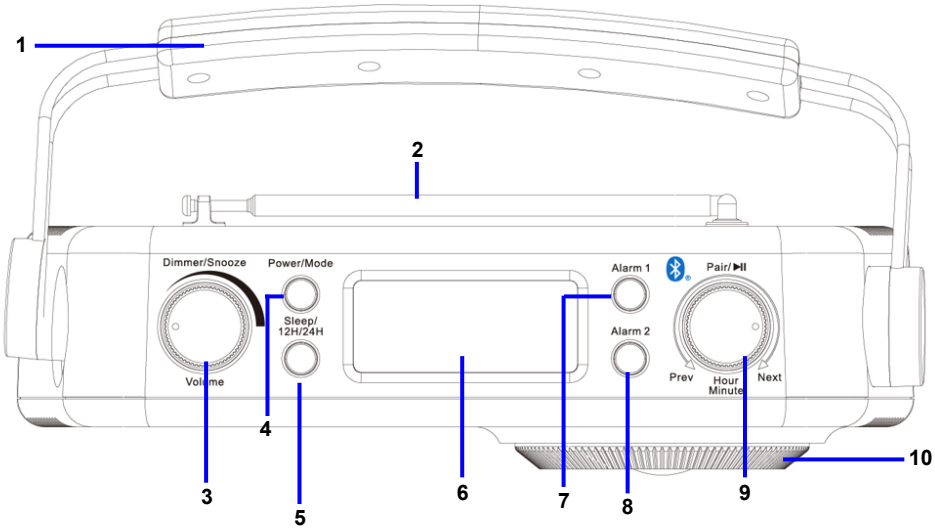

1. Handle
2. Antenna
3. Volume/Dimmer/Snooze knob
4. Power/Mode button
5. Sleep/12H/24H button
6. LCD display
7. Alarm 1
8. Alarm 2
9. Prev/Next/Hour /Minute/ Pair
10. FM turning dial

PARTS

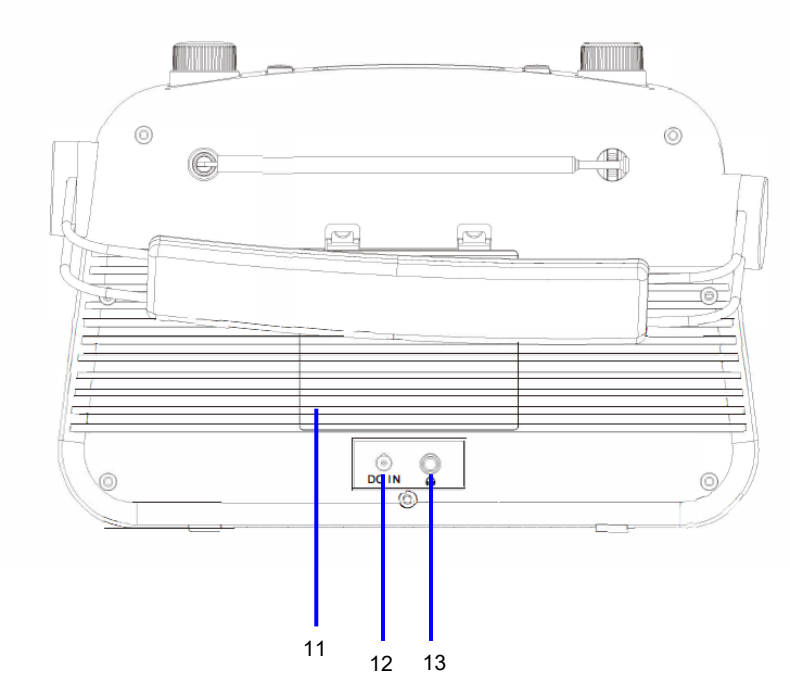

11. Battery compartment cover
12. DC in jack
13. Headphone jack

BATTERY INSTALLATION AND USE

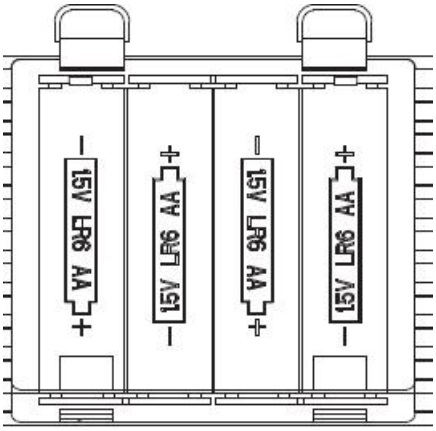

1. Lift off the battery compartment cover from the reverse of the radio.
2. Insert 4 x AA 1.5V alkaline batteries(not included) in accordance with the diagram in the battery compartment. Take care to observe the correct polarity (+/ -).
3. Refit the battery compartment cover.
4. Do not expose the batteries or the installed batteries to excessive heat(e.g fire, sunshine or position close to radiators etc.).

Notes:

1.Use of mains power is recommended for extended listening.
2.Standby mode continues to consume power.

BATTERY SAFETY AND DISPOSAL

1. CAUTION – Danger of explosion if batteries are incorrectly fitted /replaced. Only use ‘AA’ 1.5V batteries in this appliance.
2. Be sure to insert batteries correctly taking care to observe the correct polarity (+ and -). Use only batteries of the same or equivalent type as recommended.
3. Batteries should be replaced by an adult.
4. Do not recharge non-rechargeable batteries.
5. Remove rechargeable batteries from appliance before recharging.
6. Never mix old and new batteries (replace all batteries at the same time).
7. Never try to dismantle batteries.
8. Do not short-circuit the supply terminals.
9. Always remove exhausted or dead batteries from the product.
10. Remove batteries from the product before extended storage.
11. Dispose of batteries responsibly at local authority household is the recycling facility.
12. DO NOT dispose of batteries in a fire as the batteries may explode.

OPERATIONS

1. If using mains power, connect the adapter(AC 100-240V~, 50/60Hz, 0.5A Max) lead into the socket at the rear of the radio, plug in and switch on at the mains.

2. If using the radio with batteries ensure that the power cord is NOT inserted into the back of the appliance and install the batteries into the battery compartment.
3. When use this radio in battery mode, it will switch into sleep mode automatically if without any operation in 10 seconds. To activate the radio, press the Volume/Dimmer/Snooze knob.
4. Fully extend the telescopic antenna.
5. Press the POWER/MODE button to turn on the radio and the LCD display illuminates.
6. Press the POWER/MODE again to switch between Bluetooth and FM Radio mode.
7. If the radio does not find any stations, ensure the antenna is fully extended or try moving the radio to another location(near a window may be better) and repeat the above steps.
8. Adjust the volume to desired level by rotating the Volume/Dimmer/Snooze knob.
9. Press and hold the POWER / MODE button for a few seconds to place the radio in standby mode.

Note:

1.After switched to Bluetooth mode and be connected to a Bluetooth device, the unit will automatically update time. It may be necessary to wait for 1-2 minutes to allow the unit to receive the time signal.

2.In case of a sudden power failure, it is imperative to correct time by connecting the radio to a Bluetooth device or pressing the Pair button (see details in the following steps).

USING THE RADIO - FM MODE

1.TUNING THE FM RADIO

①When the unit is powered on, it defaults Bluetooth mode and press again to switch to FM radio mode.

②Unwrap and fully extend the FM Antenna for best FM reception.

③Select the waveband by turning the FM TUNING dial until the station of choice is playing.

④Adjust the volume to desired level by rotating the Volume/Dimmer/Snooze knob.

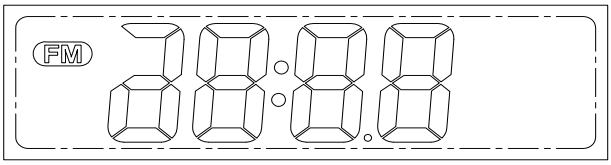

2.SETTING AND USING THE ALARM

This unit has a dual alarm function and may be set to wake up to a buzzer/radio tone .

①Power the radio on.

②Press and hold the Alarm 1 or 2 for a few seconds, after that the hour digits will flash. Rotate the Menu/ Pair knob to set up the alarm hour and wait several seconds or press the same Alarm button to confirm. The second digitals will flash.

③Rotate the Menu/ Pair knob to set the correct alarm minute and press the same alarm button to confirm.

④Rotate the Prev/Next/Hour /Minute/ Pair repeatedly to switch between 'Fu' (Radio) and 'bu' (Buzzer).

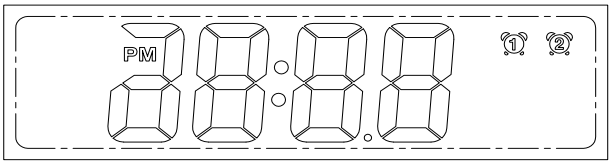

⑤When the time on the clock is the same as the alarm time that has been set, the alarm will sound and increase in volume to the volume selected.
⑥The alarm will continue to sound and stop automatically after one hour. To silence the alarm, press the alarm1 or 2 button that you have set. The alarm indicator will stop flashing after the first press and disappear after the second press.
⑦To activate the snooze function, press the SLEEP/SNOOZE button when the alarm sounds. The alarm will silence, the clock and the snooze indicator will be shown in the display. The alarm will sound again after approximately nine minutes. The Volume/ Dimmer/Snooze button may be used repeatedly within one hour of the alarm activation time. To cancel the snooze function; press and hold the Volume/Dimmer/Snooze knob.
⑧To activate the second alarm, follow the above procedure using ‘Alarm 2 set up’ from the alarm menu.
⑨If both alarms have been activated, priority will be given to the alarm that has the earliest activation time.
⑩If the snooze function is used for the first alarm and the activation time of the second alarm is within this period, the second alarm will activate at the time set.

SETTING AND USING THE SLEEP FUNCTION

①This function will switch off the radio automatically after a preset time interval. The sleep interval can be set via the pressing the sleep button.
②Power the radio and press the sleep button once, the display will show 10, which indicates the unit will turn off after 10 minutes.
③Repeated press the Sleep/12H/24H button to select the Sleep time, 10 to 90 minutes in10 minute increment. After a couple seconds, the Sleep time will disappear from the display.

NOTE:

To cancel the Sleep function, press the Sleep/12H/24H button continuously until the panel shows "OFF".

TO SET OR RESET THE ACTUAL TIME

Every time the radio is powered on, you have to correct the time on it by connecting to a Bluetooth device (eg. mobile phone or tablet PC),or by the following steps.
①Press and hold the the Power/Mode button to enter standby mode.
②Press and hold the Sleep/12H/24H button to select between 12-hour display or 24-hour display.
③Press and hold the Hour、Minute/ Pair knob, the hour digitals will now flash. Rotate the same knob to correct hour, press the same knob to confirm, and the minute digitals will flash, then rotate the same knob to correct minute.

SETTING THE OPERATIONAL DISPLAY BACKLIGHT LIGHT LEVELAND TIME OUT INTERVAL

①The brightness level (high, medium or low) of the operational display backlight level an be selected via pressing the Volume/Dimmer/Snooze knob.
②Press the Volume/Dimmer/Snooze knob, the brightness level (high, medium or low) of the operational display will change accordingly.

Using Bluetooth function

①Power the radio, press Power/ Mode button once, “BT” will appear and blink on the display.
②Make sure that no other Bluetooth device is connected to the radio.
③Activate Bluetooth mode on the device that you want to connect. Look for the radio on the list of detected devices on the Bluetooth device .
④Select “MCR41818“ from the list. If your device requires a code, enter 0000 or 1234. (The Android user may be asked to make a conform on device)
⑤Once the connection has been successful, a conform voice "Bluetooth connected" will be heard.
⑥Start playback on your Bluetooth device.
⑦Control the playback from the Bluetooth device or from the radio using the Volume/ Dimmer/snooze knob on the device. Adjust the volume both on the Bluetooth device and the radio. Use the Hour/Minute/ Pair knob on the device to play or pause, and the Prev/ Next to play the previous or next song.
⑧To disconnect a connected Bluetooth device: Press and hold down the Prev/Next/ Hour /Minute/ Pair knob. To reconnect BT, press the same knob again.

🎧 HEADPHONE JACK:

For private listening, connect the 3.5mm plug from the Earphone/Headphone (not included) into the

HEADPHONE Jack on the left of unit. Sound from speakers will be auto cut.

CLEANING:

1. To prevent fire or shock hazard, disconnect your unit from the AC wall outlet when cleaning.
2. The finish on your unit may be cleaned with a dust cloth and cared for as other furniture. Use caution when cleaning and wiping the plastic parts.
3. Mild soap and a damp cloth may be used.

TROUBLESHOOTING GUIDE

SYMPTOM	POSSIBLE CAUSE/ SOLUTION
The unit does not work (display not illuminated)	Has the adaptor lead been correctly plugged into the mains and the DC input jack at the back of the unit? Does the socket that is being used have power? Has the power lead been removed from the back of the unit without the batteries being installed?
The unit does not work on batteries	Are the batteries inserted correctly?Are the batteries exhausted?
No sound (display illuminated)	Is the volume set at minimum?Are headphones fitted in the phones jack?
Radio reception noisy (FM)	Extend or adjust the position of the antenna or radio.
Alarm does not work	Has the alarm been activated? Has the correct alarm been activated?
Sleep function does not work	Has the sleep function been activated?

GENERAL SPECIFICATION

Power Source.....5.6 V ⎓ 1A

Audio Power.....2W, RMS

Radio Frequency: FM ..... 87.5～108MHZ

BT Version.....5.0

Bluetooth effective working range in open area.....up to 32 feet

Speaker.....4Ω3W

Back-up batteries(not included).....4 x AA 1.5V

ACCESSORIES

1 x AC/DC Adapter (Input: AC 100-240V~, 50/60Hz, 0.5A Max)

Output: 5.6V ⎓ 1A

1 x Owner's Manual

SPECIFICATIONS AND ACCESSORIES ARE SUBJECT TO CHANGE WITHOUT NOTICE

LIMITED WARRANTY

Craig warrants this product to be free from manufacturing defects in material and workmanship under normal use for a period of 180 days from date of purchase. If service is required, please return the product to the store where it was purchased for exchange; or, pack the unit in the original packing material with all accessories if applicable, a copy of your sales receipt and a Cashier's check or Money Order for $7 (to cover shipping and handling costs) payable to Craig Electronics Inc. For consumers in Canada, please make sure that the cashier check or money order is redeemable through a U.S. bank. Ship your product freight pre-paid. Your unit will be repaired, replaced or if the unit can not be repaired or replaced, a refund will be forwarded to you within four weeks of receipt of your unit. Please ship your unit to:

Craig Electronics Inc.
PO Box 279130, Miramar, Fla. 33027-9997

This warranty is void if the product has been: a) Used in a commercial application or rental. b) Damaged through misuse, negligence, or abuse. c) Modified or repaired by anyone other than an authorized Craig service center. d) Damaged because it is improperly connected to any other equipment.
Note: This warranty does not cover: a) Ordinary adjustments as outlined in the Owner's Manual which can be performed by the customer. b) Damage to equipment not properly connected to the product. c) Any cost incurred in shipping the product for repair. d) Damage to the product not used in the USA.

This warranty is not transferable and only applies to the original purchase. Any implied warranties, including the warranty of merchantability, are limited in duration to the period of this expressed warranty and no warranty whether expressed or implied shall apply to the product thereafter.

Under no circumstance shall Craig be liable for any loss or consequential damage arising out of the use of this product. This warranty gives specific legal rights. However, you may have other rights which may vary from state to state. Some states do not allow limitations on implied warranties or exclusion of consequential damage. Therefore, these restrictions may not apply to you.

This product has been manufactured by and is sold under the responsibility of Craig and Craig is the warrantor in relation to this product. MAGNAVOX and SMART. VERY SMART are registered trademarks of Koninklijke Philips N.V. and are used under license from Koninklijke Philips N.V.

To Obtain Service on your Product
email: magnavox@craigelectronics.com

Printed in China MCR41818_WC_E0CL1_B0US