BLUETOOTH SPEAKER WITH BUILT-IN RECHARGEABLE BATTERY

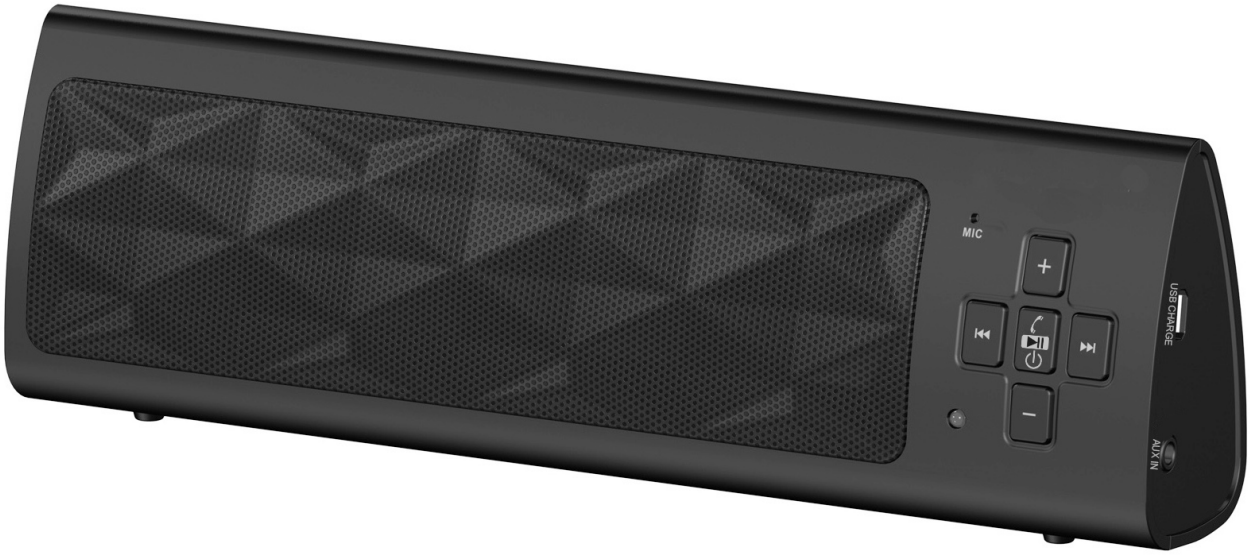

Model:BT2165GB

PLEASE READ THESE INSTRUCTIONS CAREFULLY BEFORE OPERATING UNIT

The lighting flash with arrowhead symbol, within an equilateral triangle, is intended to alert user to the presence of uninsulated "dangerous voltage" within the product's enclosure, that may be of sufficient magnitude to constitute a risk of electric shock to person.	CAUTION RISK OF ELECTRIC SHOCK DO NOT OPEN CAUTION: TO REDUCE THE RISK OF ELECTRIC SHOCK, DO NOT REMOVE COVER (OR BACK). NO USER-SERVICEABLE PARTS INSIDE. REFER SERVICING TO QUALIFIED SERVICE PERSONNEL.	The exclamation point within an equilateral triangle is intended to alert user to the presence of important operating and maintenance (servicing) instruction in the literature accompanying the appliance.

FCC STATEMENT:

This device complies with part 15 of the FCC Rules. Operation is subject to the following two conditions:

(1)This device may not cause harmful interference, and
(2)This device must accept any interference received, including interference that may cause undesired operation. The antenna(s) used for this transmitter must be installed to provide a separation distance of at least 8" from all persons and must not be co-located or operated in conjunction with any other antenna or transmitter.

FCC NOTE:
This equipment has been tested and found to comply with the limits for a Class B digital device, pursuant to Part 15 of the FCC Rules. These limits are designed to provide reasonable protection against harmful interference in a residential installation. This equipment generates, uses and can radiate radio frequency energy and, if not installed and used in accordance with the instructions, may cause harmful interference to radio communications. However, there is no guarantee that interference will not occur in a particular installation. If this equipment does cause harmful interference to radio or television reception, which can be determined by turning the equipment off and on, the user is encouraged to try to correct the interference by one or more of the following measures:

-- Reorient or relocate the receiving antenna.
-- Increase the separation between the equipment and receiver.
-- Connect the equipment into an outlet on a circuit different from that to which the receiver is connected.
-- Consult the dealer or an experienced radio/TV technician for help.

To assure correct operation, follow the attached installation instructions and use only shield cables when connecting to other devices. Changes or modifications not expressly approved by the party responsible for compliance could void the user's authority to operate the equipment.

"This equipment complies with FCC RF radiation exposure limits set forth for an uncontrolled environment.
This equipment should be installed and operated with a minimum distance of 20 centimeters between the radiator and your body."

WARNING:TO PREVENT FIRE OR SHOCK HAZARD, DO NOT EXPOSE THIS UNIT TO RAIN OR MOISTURE.

IMPORTANT SAFETY INSTRUCTIONS

Before using the unit, be sure to read all operating instructions carefully. Please note that these are general precautions and may not pertain to your unit. For example, this unit may not have the capability to be connected to an outdoor antenna.

1. Read these instructions – All the safety and operating instructions should be read before the appliance is operated.
2. Keep these instructions – The safety and operating instructions should be kept for future reference.
3. Heed all warnings – All warnings on the appliance and in the operating instructions should be adhered to.
4. Follow all instructions – All operation and use instructions should be followed.
5. Do not use this unit near water, for example, near a bath tub, washbowl, kitchen sink, laundry tub, in a wet basement, or near a swimming pool.
6. Clean only with dry cloth – The unit should be cleaned only as recommended by the manufacturer.
7. Do not block any ventilation openings. Install in accordance with the manufacturer's instructions. The unit should be situated so that its location or position does not interfere with its proper ventilation. For example, the unit should not be situated on a bed, sofa, rug, or similar surface that may block the ventilation openings; or placed in a built-in installation, such as a bookcase or cabinet that may impede the flow of air through the ventilation openings.
8. Do not install near any heat sources such as radiators, heat registers, stoves, or other apparatus (including amplifiers) that produce heat.
9. Do not defeat the safety purpose of the polarized or grounding-type plug. A polarized plug has two blades and a third grounding prong. The wide (the third prong) is provided for your safety. If the provided plug does not fit into your outlet, consult an electrician for replacement of the obsolete outlet.
10. Protect the power cord from being walked on or pinched particularly at plugs, convenience receptacles, and the point where it exits from the unit.
11. Only use attachments / accessories specified by the manufacturer.
12. Use only with a cart, stand, tripod, bracket, or table specified by the manufacturer, or sold with the unit. When a cart is used, use with caution when moving the cart/unit combination to avoid injury from tip-over.

13. Unplug this unit during lightning storms or when unused for long periods of time (such as while on vacation).
14. Refer all servicing to qualified service personnel. Servicing is required when the unit has been damaged in any way, such as power-supply cord or plug is damaged, liquid has been spilled or objects have fallen into the apparatus, the apparatus has been exposed to rain or moisture, does not operate normally, or has been dropped.
15. This unit should not be exposed to dripping or splashing water and no objects filled with liquids such as vases should be placed on the unit.
16. Power Sources – The appliance should be connected to a power supply only of the type described in the operating instructions or as marked on the appliance. Do not overload wall outlet.
17. Battery should not be exposed to excessive heat such as sunshine, fire, etc.
18. Battery could burst open if incorrectly replaced. Replace only with the same or equivalent type.
19. Do not attempt to dismantle, open or repair this product yourself. If a problem occurs, seek advice from your local qualified service technician or contact the distributor at the telephone number at the back of this instruction manual.
20. Caution marking and nameplate are located on back or bottom of product.

Product Overview

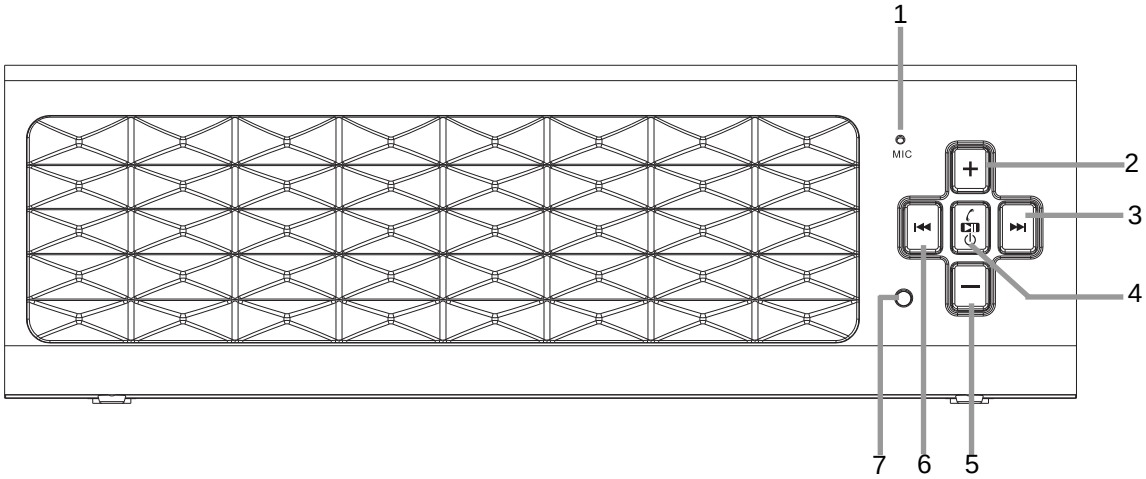

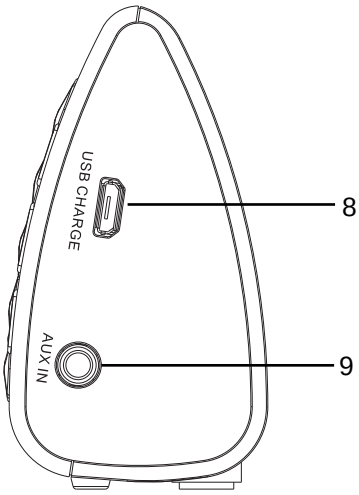

1.Built-in microphone
2.Volume Up (+) button
3.Next (⏭) button
4.Play/Pause/Standby On-Off /Phone button
5.Volume Down (–) button
6.Previous (⏮) button
7.Bluetooth/Battery indicator
8.USB charging port
9.AUX IN jack

BATTERY CHARGING

The unit is operated by an integrated lithium battery. Charge the battery as follows:

1.Plug the micro B USB plug of the charging cable into the jack of the unit. Connect the USB plug to a powered-on computer. The indicator lights up red and the battery begins to charge.

2.If the battery is completely charged, the indicator red light turns off.

3.Remove the charging cable from the Speaker and PC.

Note:

- In Bluetooth mode, the Speaker will send an alarm sound every 30 seconds or so when the battery is nearly exhausted.

Battery Caution

--The battery (batteries or battery pack) should not be exposed to excessive heat such as sunshine, fire, etc.

-Battery could burst open if incorrectly replaced. Replace only with the same or equivalent type.

POWER ON/OFF

- Turn on the Speaker by pressing and holding Standby button. The Bluetooth indicator will start to blink.

Note:

-Automatic connection If supported by your player (e.g. mobile phone), the devices will be connected automatically. The prerequisite for this is:

-Device (i.e., mobile phone) will connect if:

1.Devices were already paired with each other.
2.Bluetooth is activated in your player.

- Hold the Standby button to turn off the Speaker. The units are now disconnected.

SYNC'ING (SYNCHRONIZING) YOUR BLUETOOTH DEVICE TO YOUR SPEAKER

Note: The speaker will connect to your Bluetooth device automatically once you have sync'd them.

1. When you are sync'ing the devices, make sure the speaker and your Bluetooth device are close together. When the speaker is in Power Off state, hold "Power/Stand by" button down until the blue light comes on and blinks. Once this happens you have now begun the sync'ing process. (NOTE: if you do not sync the devices in a reasonable amount of time, the sync'ing process will abort and the LED light will turn off. Repeat Step 1 to start again.)

2. Make sure Bluetooth is activated on your Bluetooth device. For details about the Bluetooth searching device function, please refer to the user manual for that specific device.

3. Pull up the list of Bluetooth devices on the device you are trying to sync and you will see "BT2165". If "BT2165" is not on the Bluetooth's list, select "Scan" to search for it. Then click on that to start the pairing process.

4. If it asks for a password, input pass code “0000” and confirm it to connect to speaker. When it has finished the sync’ing process, the blue LED light stays on all the time.

Note: If an audio cable is connected to the AUX IN jack, the connection via Bluetooth will not work.

Note:

-Depending on the device manufacturer, you need to perform the registration (PAIRING) again to connect the devices.

- If there is a problem with the pairing of a playback device, deactivate The WiFi and mobile data function in your playback device.

-To ensure an optimal connection, make sure that the battery of your player is completely charged.

-If a mobile phone on which you are playing music receives a call, the music will be interrupted. Press the Phone button to accept the call and the caller’s voice will be heard through the speakers. For your conversation, speak into the microphone of the device. After you have ended the call, the devices are connected to each other again and playback continues.

Note:

The speaker will enter standby mode after about 10 minutes if no pairing/Bluetooth connection is attempted.

DURING PLAYING:

-Press the volume + or - button to adjust the volume level.

-Press the Play/Pause button to pause, press again to resume playing.

-Press the Previous or Next button to skip the track.

Accepting / Ending/Refusing call in Bluetooth mode

-Press the Phone button to accept an incoming call.

-To end the call, press the Phone button again.

-Hold the button to refuse an incoming call.

AUX IN

Aux in Operation

An external (auxiliary) audio source (i.e., personal CD or MP3 player) can be connected to this unit and heard through the speaker.

1. Connect the AUX 3.5mm cable (included) into the AUX IN socket on the right side of the unit.
2. Connect the other end of the AUX cable into the headphone or Line Out socket of the external source.
3. Turn on the Bluetooth speaker and the external audio device (such as your MP3 player).
4. The volume can be adjusted from the Bluetooth speaker and from the external audio device. Select volume to the desired level.

Troubleshooting

Problem	Possible cause	Solution
Cannot switch the speaker on.	Battery exhausted	Recharge the battery.
No audio signal during playback through AUX.	Volume of the external audio source is too low.	Increase the volume of the external audio device.
	Volume of the device too low	Increase the volume with + button
No audio signal during Bluetooth connection.	Speaker is switched off.	Switch the Speaker on.
	Speaker is not paired to the audio device.	Check whether the connection exists. If necessary, pair the speaker to the audio source again.
	Audio cable is connected.	Remove the cable.
	Volume too low	Increase the volume on the speaker.
		Increase the volume on the audio source.
Cannot connect speaker.	Pairing does not work.	Check whether the audio source supports the A2DP protocol.
	Audio source is turned off.	Turn the audio source on.
	Bluetooth is turned off on the audio source.	Turn the Bluetooth function on in the audio source.
	Bluetooth version is not supported.	Use another playback device.

Technical Specifications

Audio output ....1.5W x 2
Power supply:.....DC 5 V
Battery:.....3.7V,400mAh Lithium-lons
Operating time:.....approx. 3- 4 hours
(with volume level set at 1/2)

Bluetooth
Bluetooth support:.....V2.1+EDR
Range:.....up to 30 feet

ACCESSORY

1 X USB charging cable

The right to make technical and design modifications in the course of continuous product development remains reserved.

Bluetooth® is a trademark on a registered trademark of Bluetooth SIG Inc. All other trademarks and trade names are those of their respective owners.

90-DAY LIMITED WARRANTY

The distributor, ELECTRO BRAND INC. (EBINC) warrants to the original consumer of this ELECTRO BRAND product that it will furnish a replacement for, or, at its sole option, repair any part which proves (upon inspection by EBINC) to be defective under normal use within 90 days of the original purchase date.

This warranty does not apply to appearance items, including, but not limited to, antennas, knobs, cabinets or cases, and in the case of batteries, for damage caused by leaking batteries. It also does not apply to the product, or to any part thereof, that has been damaged through misuse or negligence.

Furthermore, this warranty will become invalid if, in the judgment of EBINC the product or any part thereof has been installed incorrectly, repaired or altered by other than EBINC Warranty Service Department.

This warranty gives you specific legal rights and you may also have other rights which vary from state to state. Some states do not allow the exclusion or limitation of incidental or consequential damages or limitations on how long an implied warranty lasts, so the above exclusions and limitations may not apply to you.

For Service, Warranty, or Product Information,
Please contact the Electro Brand, Inc.,
Customer Service Department at:

1-800-982-3954, Ext. 117

between the hours of 8:00 a.m. and 4:30 p.m. Central Standard Time
Monday through Friday.

PLEASE SAVE THIS CARD TOGETHER WITH DATED PROOF OF PURCHASE FOR YOUR RECORDS AND FOR CUSTOMER SERVICE.

Date purchased _____ Model number _____