ONN 37" BLUETOOTH SOUNDBAR

MODEL:ONB18SB001

PRODUCT GUIDE

IMPORTANT SAFETY INSTRUCTIONS

CAUTION

RISK OF ELECTRIC SHOCK
DO NOT OPEN

CAUTION: TO REDUCE THE ELECTRIC SHOCK, DO NOT REMOVE THE COVER (OR BACK). NO USER SERVICEABLE PART INSIDE, REFER SERVICING TO QUALIFIED SERVICE PERSONNEL.

DANGEROUS VOLTAGE: The lighting flash with arrowhead symbol within an equilateral triangle is intended to alert the user to the presence of uninsulated “dangerous voltage” within the product’s enclosure that may be of sufficient magnitude to constitute a risk of electric shock to persons.

ATTENTION: The exclamation point within an equilateral triangle is intended to alert the user to the presence of important operating and maintenance (servicing) instructions in the literature accompanying the appliance.

WARNING: TO PREVENT FIRE OR SHOCK HAZARD, DO NOT EXPOSE THIS UNIT TO RAIN OR MOISTURE.

WARNING: USE UNDER SUPERVISION OF AN ADULT DUE TO LONG CORD This unit has a long cord that can be easily tripped on or pulled on, causing injury. Please make sure it is arranged so that it will not drape over a tabletop, etc. Where it can be pulled on by children or tripped over accidentally.

FCC STATEMENT:

This device complies with part 15 of the FCC Rules. Operation is subject to the following two conditions:

(1)This device may not cause harmful interference, and

(2)This device must accept any interference received, including interference that may cause undesired operation. The antenna(s) used for this transmitter must be installed to provide a separation distance of at least 20 cm from all persons and must not be co-located or operating in conjunction with any other antenna or transmitter.

This device complies with Industry Canada licence-exempt RSS standard(s). Operation is subject to the following two conditions:

(1)this device may not cause interference

(2) this device must accept any interference, including interference that may cause undesired operation of the device.

Le présent appareil est conforme aux CNR d'Industrie Canada applicables auxappareils radio exempts de licence. L'exploitation est autorisé aux deux conditions suivantes :

(1) l'appareil ne doit pas produire de brouillage, et

(2) l'utilisateur de l'appareil doit accepter tout brouillage radioélectrique subi, même si le brouillage est susceptible d'en compromettre lefonctionnement.

FCC NOTICE:

This equipment has been tested and found to comply with the limits for a Class B digital device, pursuant to Part 15 of the FCC Rules. These limits are designed to provide reasonable protection against harmful interference in a residential installation. This equipment generates, uses and can radiate radio frequency energy and, if not installed and used in accordance with the instructions, may cause harmful interference to radio communications. However, there is no guarantee that interference will not occur in a particular installation. If this equipment does cause harmful interference to radio or television reception, which can be determined by turning the equipment off and on, the user is encouraged to try to correct the interference by one or more of the following measures:

- Reorient or relocate the receiving antenna.
- Increase the separation between the equipment and receiver.
- Connect the equipment into an outlet on a circuit different from that to which the receiver is connected.
- Consult the dealer or an experienced radio/TV technician for help.

FCC WARNING:
To assure continued operation, follow the attached installation instructions and use only shield cables when connecting to other devices. Changes or modifications not expressly approved by the party responsible for compliance could void the user's authority to operate the equipment.

IMPORTANT SAFETY INSTRUCTIONS

Before using the unit, be sure to read all operating instruction carefully, please note that these are general precautions and may not pertain to your unit. For example, this unit may not have the capability to be connected to an outdoor antenna.

1. Read these instructions
All the safety and operating instructions should be read before the appliance is operated.

2. Keep these instructions
The safety and operating instructions should be kept for future reference.

3. Heed all warnings
All warnings on the appliance and in the operating instructions should be adhered to.

4. Follow all instructions
All operation and use instructions should be followed.

5. Do not use this apparatus near water
The appliance should not be used near water; for example, near a bath tub,

washbowl, kitchen sink, laundry tub, in a wet basement, or near a swimming pool.

6. Clean only with dry cloth

The appliance should be cleaned only as recommended by the manufacturer.

7. Do not block any ventilation openings. Install in accordance with the manufacturer's instructions.

Slots and openings in the cabinet and in the back or bottom are provided for ventilation, to ensure reliable operation of the product and to protect it from overheating. These openings must not be blocked or covered. The openings should never be blocked by placing the product on a bed, sofa, rug, or similar surface. This product should never be placed near or over a radiator or heat source. This product should not be placed in a built-in installation, such as a bookcase or rack unless proper ventilation is provided or the manufacturer's instructions have been adhered to.

8. Do not install near any heat sources such as radiators, heat registers, stoves, or other apparatus (including amplifiers) that produce heat.

9. Do not defeat the safety purpose of the polarized or grounding-type plug. A polarized plug has two blades with one wider than the other. A grounding type plug has two blades and a third grounding prong. The wide or the third prong are provided for your safety. If the provided plug does not fit into your outlet, consult an electrician for replacement of the obsolete outlet.

10. Protect the power cord from being walked on or pinched particularly at plugs, convenience receptacles, and the point where they exit from the apparatus.

11. Only use attachments / accessories specified by the manufacturer.

12. Use only with a cart, stand, tripod, bracket, or table specified by the manufacturer, or sold with the apparatus. When a cart is used, use caution when moving the cart/apparatus combination to avoid injury from tip-over.

Portable Cart Warning

An appliance and cart combination should be moved with care. Quick stop, excessive fore and uneven surfaces may cause the appliance and cart combination to overturn.

13. Unplug this apparatus during lightning storms or when unused for long periods of time.

To protect your product from a lightning storm, or when it is left unattended and unused for long periods of time, unplug it from the wall outlet and disconnect the antenna or cable system. This will prevent damage to the product due to lightning and power-line surges.

14. Refer all servicing to qualified service personnel. Servicing is required when the apparatus has been damaged in any way, such as power-supply cord or plug is damaged, liquid has been spilled or objects have fallen into the apparatus, the apparatus has been exposed to rain or

moisture, does not operate normally, or has been dropped.

15. Power source

This product should be operated only from the type of power source indicated on the marking label. If you are not sure of the type of power supply to your home, consult your appliance dealer or local power company. For products intended to operate from battery power, or other source, refer to the operation instructions.

16. Power lines

An outside antenna system should not be located in the vicinity of overhead power lines or other electric light or power circuits, or where it can fall into such power lines or circuits. When installing an outside antenna system, extreme care should be taken to keep from touching such power lines or circuits as contact with them might be fatal.

17. Overloading

Do not overload wall outlets and extension cords as this can result in a risk of fire or electric shock.

18. Object and liquid entry

Never push objects of any kind into the product through openings as they may touch dangerous voltage points or short out parts that could result in fire or electric shock. Never spill or spray any type of liquid on the product.

19. Outdoor antenna grounding

If an outside antenna is connected to the product, be sure the antenna system is grounded so as to provide some protection against voltage surges and built up static charges. Section 810 of the National Electric Code ANSI/ NFPA 70 provides information with respect to proper grounding of the mast and supporting structure, grounding of the lead- in wire to an antenna discharge product, size of grounding conductors, location of antenna- discharge product, connection to grounding electrodes and requirements for the grounding electrodes.

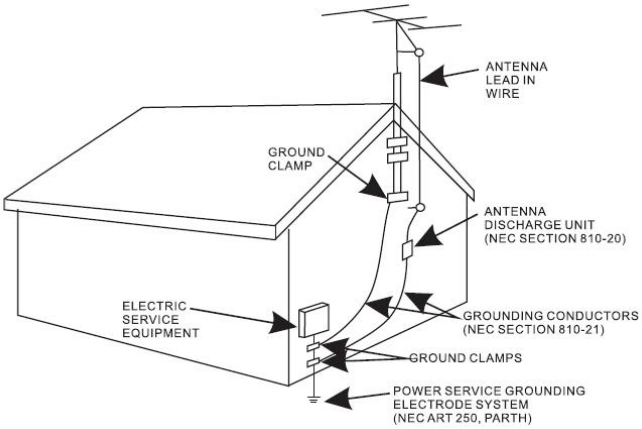

20. Service

Do not attempt to service this product yourself as opening or removing covers may expose you to dangerous voltage or other hazards. Refer all servicing to qualified service personnel.

21. Replacement parts

When replacement parts are required, be sure the service technician uses replacement parts specified by the manufacturer or those that have the same characteristics as the original parts. Unauthorized substitutions may result in fire or electric shock or other hazards.

22. Safety check

Upon completion of any service or repairs to this product, ask the service technician to perform safety checks to determine that the product is in proper operating condition.

23. Wall or ceiling mounting

The product should be mounted to a wall or ceiling only as recommended by the manufacturer.

24. Damage requiring service

Unplug this product from the wall outlet and refer service to qualified service personnel under the following conditions.

a)When the power- supply cord or plug is damaged.

b)If liquid has been spilled or objects have fallen into the product.

c)If the product has been exposed to rain or water.

d)If the product does not operate normally by following the operating instructions. Adjust only those controls that are covered by the operating instructions, as an adjustment of other controls may result in damage and will require extensive work by a qualified technician to restore the product to its normal operation.

e)If the product has been dropped or the cabinet has been damaged.

f)When the product exhibits a distinct change in performance- this indicates a need for service.

25. Note to CATV system installer

This reminder is provided to call the CATV system installer' s attention to Article 820- 40 of the NEC that provides guidelines for proper grounding and, in particular, specifies that the cable ground shall be connected to the grounding system of the building, as close to the point of cable entry as practical.

NOTE: Refer all servicing to qualified service personnel. Servicing is required when the unit has been damaged in any way such as the following: the power-supply cord or plug has been damaged, liquid has been spilled into unit, the unit has been exposed to rain or moisture, the unit has been dropped or the unit does not operate normally.

PRODUCT OVERVIEW

FRONT VIEW

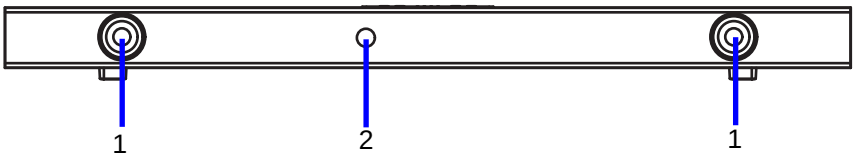

TOP PANEL

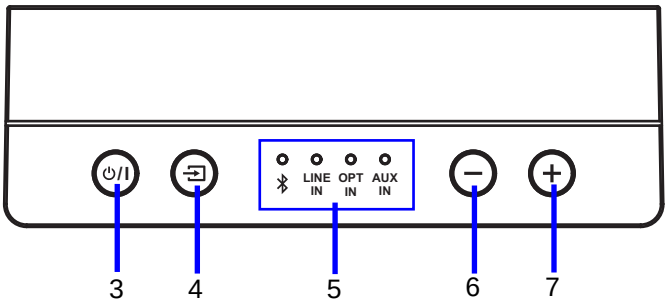

REAR PANEL

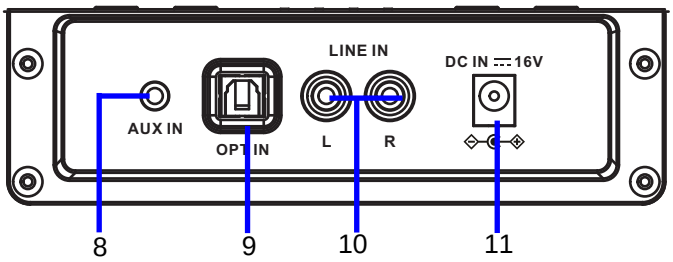

1. Speaker
2. Remote Sensor
3. Power On/Off Button
4. Mode Switch Button
5. Mode Indicator
6. Volume Down Button
7. Volume Up Button
8. AUX IN Jack
9. OPTICAL IN Jack
10. LINE IN Jacks
11. DC IN Jack

REMOTE CONTROL

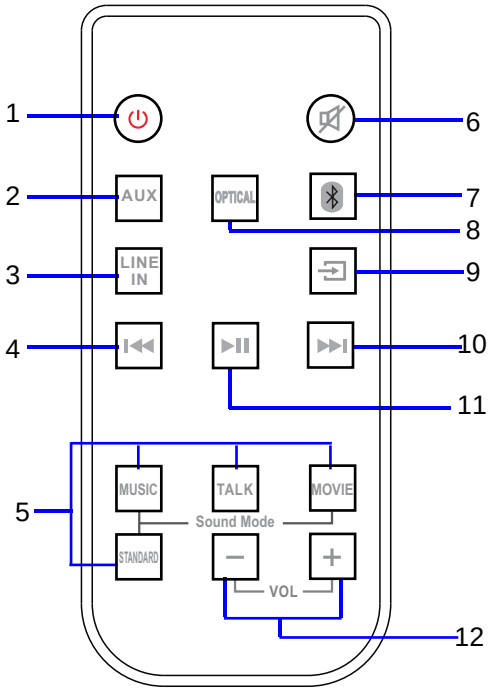

1. ⏻ (Power On/Off) Button
2. AUX Button
3. LINE IN Button
4. ⏮ (Previous) Button
5. Sound Mode (MUSIC, TALK, MOVIE, STANDARD)
6. 🔇 (Mute) Button
7. ᛒ (Bluetooth)Button
8. OPTICAL Button
9. ⇥ (Mode Switch) Button
10. ⏭ (Next) Button
11. ⏯ Play/Pause Button
12. − + (Volume Up/Down)Button

BATTERY INSTALLATION OF REMOTE CONTROL

First time use

Remove and discard the insulation film as Fig.1.

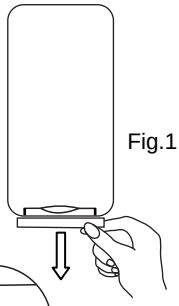

Fig.1

Replacing battery for Remote Control

1. Pull out the battery holder as Fig.2.
2. Replace the old button cell with a new CR2025 button cell with the polarity markings facing upward as Fig.3.
3. Push back the battery holder as Fig.4.

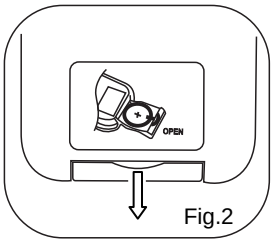

Fig.2

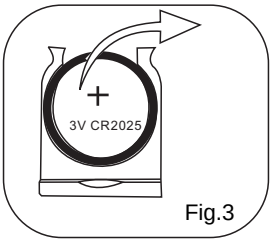

Fig.3

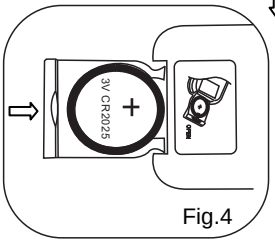

Fig.4

BATTERY PRECAUTIONS

Follow these precautions when using a battery in this device:

1. Use only the size and type of battery specified.
2. Be sure to follow the correct polarity when installing the battery as indicated in the battery compartment, a reserved battery may cause damage to the device.
3. Do not mix different types of batteries together (e.g: Alkaline and Carbon-zinc) or old batteries with fresh ones.
4. If the batteries in the device are consumed or the device is not to be used for a long period of time, remove the batteries to prevent damage or injury from possible leakage.
5. Do not try to recharge the battery as it is not intended to be recharged; it can overheat and rupture. (Follow the battery manufacturer's instructions.)
6. The batteries shall not be exposed to excessive heat such as sunshine or fire.
7. Clean the battery contacts and also those of the device prior to battery installation.
8. The remote control is supplied with a coin/button cell battery. If the coin button cell battery is swallowed, it can cause severe internal burns in just 2 hours and can lead to death. Keep new and used battery away from children. If the Battery compartment does not close securely, stop using the product and keep it away from children. If you think batteries might have been swallowed or placed any part of the body, seek immediate medical attention.

CAUTION

- Danger of explosion if the battery is incorrectly replaced.
- Replace only with the same or equivalent type.

Remote control operation range

- When there is an obstacle between the transmitter and the unit, the unit may not operate.
- When direct sunlight, an incandescent lamp, fluorescent lamp or any other strong light shines on the REMOTE SENSOR of the unit, the operation of the remote may be unstable.

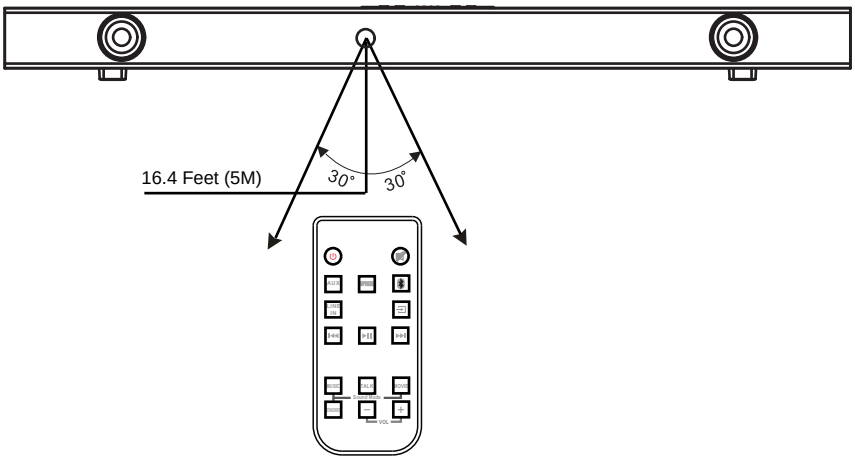

PLACEMENT AND MOUNTING

1. Placing the device on a table - Ventilation

When placing the Sound Bar on an entertainment center, bookshelf, or any type of enclosed space, be sure to allow at least 2-3 inches of space around the Sound Bar for ventilation. If the Sound Bar is enclosed in a tight space, without ventilation, heat generated from the Sound Bar could produce a potential heat hazard.

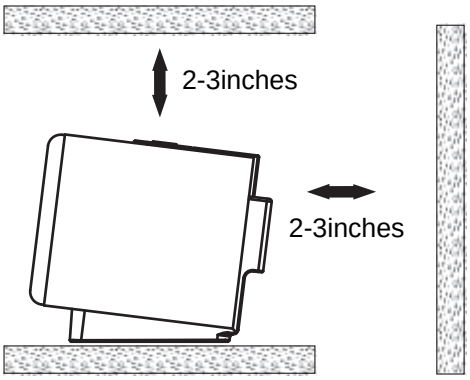

2. The Installation Distance

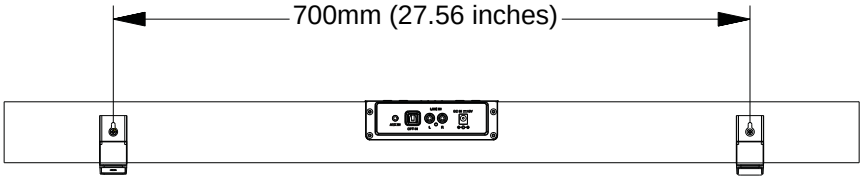

2.1 Mounting to a wooden wall

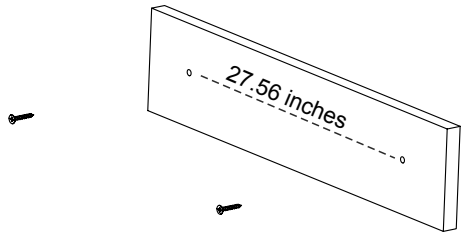

(screws not included)

A. Mark the position of the mounting screws on the wall using a pencil.

B. Drill the screws directly into the marks that you have made on the wall and leave approx. 0.3 inches length to hook the sound bar.

C. Put the sound bar onto the mounting screws. Make sure they are firm and stable.

2.2 Mounting to a brick wall

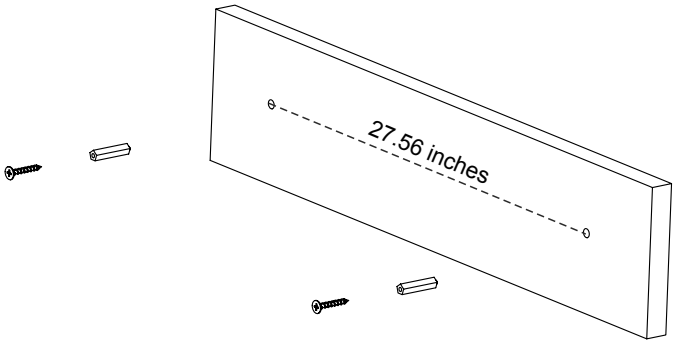

(screws and plastic fixing plug are not included)

A. Mark the position of the mounting screws on the wall using a pencil.

B. Drill 2 holes on wall with a powerful electric drill.

C. Insert the fixing plug and hammer into the holes.

D. Secure the screws into the fixing plug and leave approx. 0.3 inches length to hook the sound bar.

E. Put the sound bar onto the mounting screws. Make sure they are firm and stable.

GENERAL OPERATION

1. Connect the AC/DC adapter to the unit and wall outlet.

2. Press the ⏻/I button on the unit or press the ⏻ button on remote control to power on the unit.

3. Press the button on the unit or remote control repeatedly to switch to the desired mode. Or press the AUX, OPTICAL, , LINE IN button on the remote control to turn to desired mode, the corresponding mode indicator on top of the unit will light up.

4. During Playing:

~ Press the + or - button on the unit or remote control repeatedly to adjust volume.

~ Press the button on remote control to turn off sound, the mode indicator on the unit will blink, press the button again to resume.

~ Press the MUSIC button on remote control to turn to MUSIC sound effect mode.

~ Press the TALK button on remote control to turn to TALK sound effect mode.

~ Press the MOVIE button on remote control to turn to MOVIE sound effect mode.

~ Press the STANDARD button on remote control to turn to normal sound effect mode.

5. Press the ⏻/I button on the unit or press the ⏻ button on remote control to to power off the unit.

BLUETOOTH OPERATION

1. Power on the unit as previously explained.

2. Press the button on the unit or remote control repeatedly or press the button on remote control to switch to Bluetooth mode, the Bluetooth indicator on the unit will turn Blue and blink.

3. Power on the external Bluetooth enable device and enter Bluetooth mode and try searching the unit.

4. When "ONB18SB001" appears, select it and make connection.

5. After successful pairing, the Bluetooth indicator will stop blinking.

6. During playing:
   ~ Press the ⏮ or ⏭ button on remote control to skip tracks.
   ~ Press the ⏯ button on remote control to pause, press it again to resume.

7. Press and hold the ⏯ button on remote control to disconnect current connection.

NOTE: The unit will be automatically connected with the last connected Bluetooth device if their Bluetooth function are activated and they are in working range.

AUX IN OPERATION

An external Audio player(such as mobile phone, MP3 player etc.) can be connected to this unit and listen through the unit's speakers.

1. Plug one end of the AUX IN Cable into the AUX IN jack on the unit.

2. Plug another end of the AUX IN Cable into the headphone jack or Aux Out jack on the external audio player.

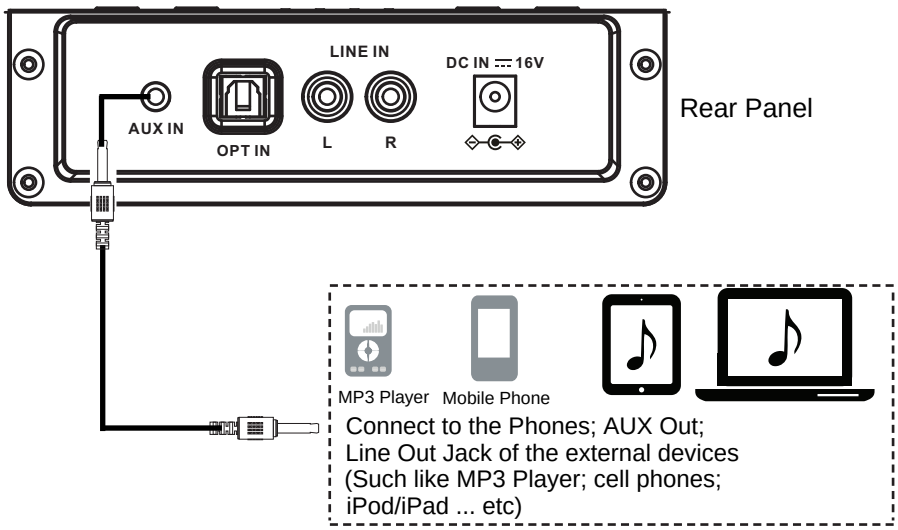

3. Power on the unit as previously explained.

4. Press the button on the unit or remote control repeatedly or press the AUX button on remote control to switch to AUX IN mode, the AUX IN indicator on the unit will turn Blue.

5. Power on the connected external player and start playing the music as usual.

LINE IN OPERATION

An external Audio/Video player(such as TV, DVD player etc.) can be connected to this unit and listen through the unit's speakers.

1. Plug one end of the line in cable into the LINE IN jacks(L&R) on the unit.

2. Plug the other end of the line in cable into the Line Out jacks(L&R) on TV or DVD player etc.

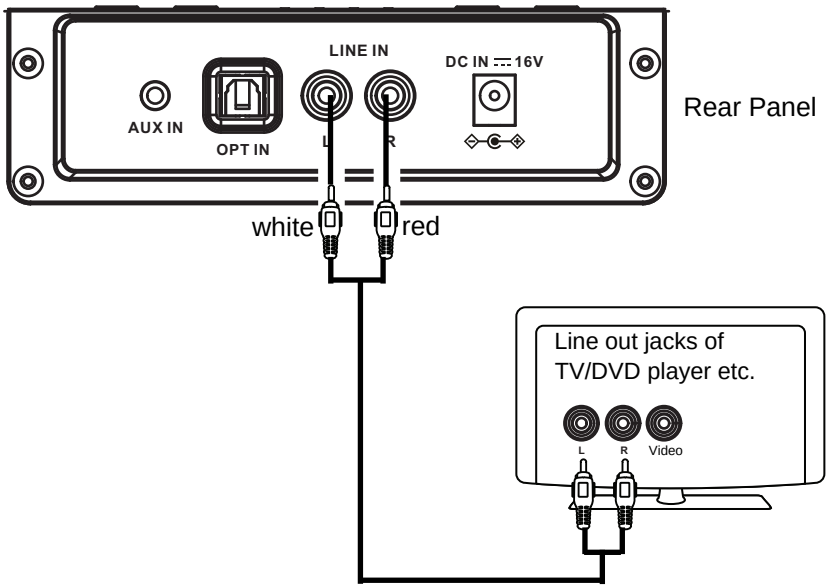

3. Power on the unit as previously explained.

4. Press the button on the unit or remote control repeatedly or press the LINE IN button on remote control to switch to LINE IN mode, the LINE IN indicator on the unit will turn Blue.

5. Power on the connected external player and start playing the music as usual.

OPTICAL-IN OPERATION

1. Connect the Optical out jack from the external audio player (such as TV, DVD player etc.) to the OPT IN jack on the rear of the unit with the optical connection cable as illustated below:(For PCM format only)

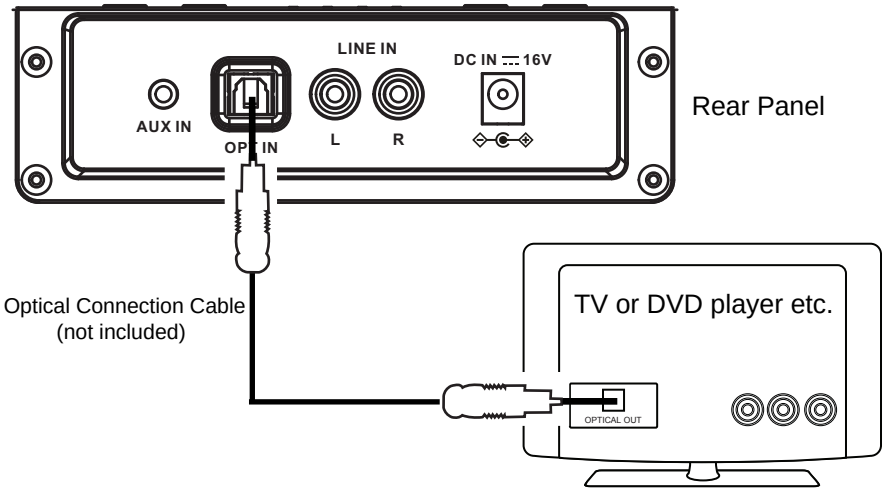

2. Power on the unit as previously explained.

3. Press the button on the unit or remote control repeatedly or press the OPTICAL button on remote control to switch to OPTICAL IN mode, the OPT IN indicator on the unit will turn Blue.

4. Power on the connected external player and start playing the music as usual. Turn on the digital audio output and set it to PCM (Pulse Code Modulation) type similar to the below figure:

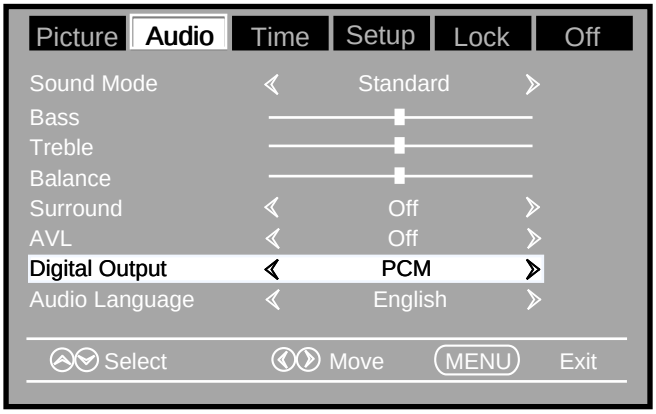

TROUBLESHOOTING

SYMPTOM	POSSIBLE CAUSE	POSSIBLE SOLUTION
No power	The adapter is not connected	Connect the adapter to the unit and wall outlet
	The unit is in power off mode	Press the ⏻/I button on the unit or press the ⏻ button on remote control to power on the unit
No sound or sound weak	Volume level in minimum position	Raise the volume level by pressing the + Button on the unit or on remote control
	The paired/connected device is not in playback mode	Play music/movie in the paired/ connected device as usual and make sure the volume level of it is in high level.
	Input source incorrect	Press the button on the unit or on remote control to switch to desired mode
Sound distortion/rattle	Volume level too high	Reduce the volume level by pressing the - Button on the top of the unit or on remote control Reduce the volume level of the paired/connected device.
Remote Control not functioning	Out of working range	Point the remote control to the remote sensor on the unit within 16 feet, +/-30 degress
	The battery in the remote control is drained	Replace with new battery
Bluetooth reception failure	The external device is too far from the unit	Put the external BT device close to the unit.
	Have not paired	Pair the unit with the BT Device as the procedures stated in this manual.

SPECIFICATIONS

Power input .....AC100~240V, 50/60Hz
Power output .....DC16V ⎓ 1.5A ⊖-◉-⊕
Audio output 2x12.5W
Bluetooth effective working range in open area.....up to 32 feet
Remote effective working range.....up to 16 feet

PACKAGES

1x Main Unit
1x User Manual
1x Power Adapter
1x Remote Control
1x AUX IN Cable
1x LINE IN Cable

SPECIFICATIONS AND ACCESSORIES ARE SUBJECT TO CHANGE WITHOUT NOTICE

LIMITED PRODUCT WARRANTY

This quality product is warranted to be free from manufacturer's defects in material and workman-ship, provided that the unit is used under the normal operating conditions intended by the manufacturer.

Should you have any problem with this product, please and it is highly recommended to visit our website at www.curtisint.com before you take any other steps as we have additional copies of instruction manuals, operating manuals and trouble shooting tips on our website which gives you the answer on most of the questions you could have in operating the unit.

TERMS OF WARRANTY

C.I. Service Dept. warrants this product to be free from defects in materials and workmanship for 90 days on parts and 90 days on labor. If you originally purchased your product more than 90 days ago, a repair fee may apply.

Nothing within this warranty shall imply that C.I. will be responsible or liable for any damage to any items placed in this product, whether due to any defect of the product, or its use, whether proper or improper.

EXCLUSIONS

Save as herein provided, C.I. Service Dept. (Canada) or C.I. Service Dept. (USA), there are no other warranties, conditions, representations or guarantees, express or implied, made or intended by C.I. or its authorized distributors and all other warranties, conditions, representations or guarantees, including any warranties, conditions, representations or guarantees under any Sale of Goods Act or like legislation or statue is hereby expressly excluded. Save as herein provided, C.I. Service Dept. (Canada) or C.I. Service Dept. (USA), shall not be responsible for any damages to persons or property, including the unit itself, howsoever caused or any consequential damages arising from the malfunction of the unit and by the purchase of the unit, the purchaser does hereby agree to indemnify and save harmless C.I. from any claim for damages to persons or property caused by the unit.

TO OBTAIN REPAIRS UNDER THE TERMS OF THIS WARRANTY

1. The original purchaser must present a copy of the original bill of sale and the service warranty card.
2. Any alterations, abuse, misuse, battery corrosion or accidental damage voids the warranty.
3. The warranty does not cover cabinets and accessories.
4. No warranty or insurance contained or set out shall apply when damage or repair is caused by power failure; damage in transit or when moving the unit; improper power supply; use for commercial or industrial purposes; service calls resulting in customer education, etc.
5. The defective product should be mailed to:

Canada
C.I. Service Dept.
315 Attwell Drive
Toronto, ON
M9W 5C1

U.S.A
Curtis International Ltd
c/o Lotus International Company
6880 Commerce Blvd.
Canton MI 48187
U.S.A.

For service assistance and product information, please call: 1-800-968-9853.

If mailing the product, the freight must be prepaid and a money order for $7.00 should be included to cover the cost of insurance and the return of the product.

6. C.I. reserves the right to repair or replace the parts which have become defective.

Model No. _____ Date Purchased _____ Serial No. _____