说明书
大小: 210*148mm
材质: 80g书纸
颜色: 黑白印刷
用量: 1pc

DCC CONTROL COPY
ISSUE
2025.02.17 16:10:02 +08'00'

品号322801200003D1

2025.02
.17
16:10:0
8
+08'00'

AURA-CUBE COMPACT WALL MOUNT STEREO

OWNER'S MANUAL

2025.02.17 16:10:13 +08'00'

2025.02.17
16:10:17
+08'00'

IMPORTANT SAFETY INSTRUCTIONS

CAUTION
RISK OF ELECTRIC SHOCK
DO NOT OPEN

CAUTION: TO REDUCE THE RISK OF ELECTRIC SHOCK, DO NOT REMOVE COVER (OR BACK). NO USER SERVICEABLE PARTS INSIDE. REFER SERVICING TO QUALIFIED SERVICE PERSONNEL.

DANGEROUS VOLTAGE: The lightning flash with arrowhead symbol within an equilateral triangle is intended to alert the user to the presence of uninsulated dangerous voltage within the product`s enclosure that may be of sufficient magnitude to constitute a risk of electric shock to persons.

ATTENTION: The exclamation point within an equilateral triangle is intended to alert the user to the presence of important operating and maintenance (servicing) instructions in the literature accompanying the appliance.

WARNING: USE UNDER SUPERVISION OF AN ADULT DUE TO LONG CORD.
This unit has a long cord that can be easily tripped on or pulled on, causing injury. Please make sure it is arranged so that it will not drape over a tabletop, etc. Where it can be pulled on by children or tripped over accidentally.

FCC NOTICE:

This equipment has been tested and found to comply with the limits for a Class B digital device, pursuant to part 15 of the FCC Rules. These limits are designed to provide reasonable protection against harmful interference in a residential installation. This equipment generates, uses and can radiate radio frequency energy and, if not installed and used in accordance with the instructions, may cause harmful interference to radio communications. However, there is no guarantee that interference will not occur in a particular installation. If this equipment does cause harmful interference to radio or television which can be determined by reception, turning the equipment off and on, the user is encouraged to try to correct the interference by one or more of the following measures:

- Reorient or relocate the receiving antenna. Increase the separation between the equipment and receiver.
- Connect the equipment into an outlet with a circuit different from that to which the receiver is connected.
- Consult the dealer or an experienced radio/TV technician for help.

FCC WARNING:

To assure continued compliance, follow the attached installation instructions and use only shielded cables when connecting to other devices. Modifications not authorized by the manufacturer may void user`s authority to operate this device.
This device complies with part 15 of the FCC Rules.
Operation is subject to the following two conditions:
(1) This device may not cause harmful interference, and
(2) this device must accept any interference received, including interference that may cause undesired operation.

RF Exposure:

To maintain compliance with FCC RF Exposure guidelines, This equipment should be installed and operated with minimum distance between 20cm the radiator your body: Use only the supplied antenna.

WARNING:

TO REDUCE THE RISK OF FIRE OR ELECTRIC SHOCK, DO NOT EXPOSE THIS PRODUCT TO RAIN OR MOISTURE.

WARNING:

TO REDUCE THE RISK OF FIRE OR ELECTRIC SHOCK, AND ANNOYING INTERFERENCE, USE THE RECOMMENDED ACCESSORIES ONLY.

2025.02.17 16:10:22 +08'00'

Before using the unit, be sure to read all operating instructions carefully. Please note that these are general precautions and may not pertain to your unit.

1. Read these instructions
All the safety and operating instructions should be read before the product is operated.

2. Keep these instructions
The safety and operating instructions should be retained for future reference.

3. Heed all warnings
All warnings on the product and in the operating instructions should be adhered to.

4. Follow all instructions
All operating and use instructions should be followed.

5. Do not use this apparatus near water
Do not use this product near water or moisture, for example: near a bathtub, washbowl, kitchen sink, laundry tub, swimming pool, or a wet basement.

6. Clean only with dry cloth
Unplug this product from the wall outlet before cleaning. Do not use liquid cleaners or aerosol cleaners. Use a dry cloth for cleaning.

7. Ventilation
The appliance should not be situated so that its location (on a bed, sofa, rug, or similar surface) or position (such as a bookcase or cabinet) interferes with its proper ventilation.

8. Heat
The appliance should be situated away from heat sources such as radiators, heat registers, stoves, or other appliances (including amplifiers) that produce heat.

9. Grounding or Polarization
Precaution should be taken to insure that the grounding or polarization means of an appliance is not defeated.

10. Power-Cord Protection
Power supply cords should be routed so that they are not likely to be walked on or pinched by items placed upon or against them, paying particular attention to cords at plugs, convenience receptacles, and the point at which they exit from the appliance.

11. Replacement Parts
When replacement parts are required, be sure the service technician has used replacement parts specified by the manufacturer. Unauthorized substitutions may result in fire, electric shock or other hazards.

12. Severe weather
In extreme weather such as lightning storm, hurricane, unplug it from the wall outlet and disconnect the antenna or cable system. This will prevent damage to the appliance due to unexpected power surges.

13. Servicing
The user should not attempt to service the appliance beyond that described in the user's operating instructions. All other servicing should be referred to qualified personnel.
The appliance should be serviced by qualified service personnel when:

- The power-supply cord or plug has been damaged.
- Objects have fallen into, or liquid has been spilled into the appliance enclosure.
- The appliance has been exposed to rain.
- The appliance has been dropped, or the enclosure damaged.
- The appliance does not appear to operate normally or exhibits a marked change in performance.

14. Power Sources
The appliance should be connected to a power supply only of the type described in the operating instructions or as marked on the appliance.

15. Non-use Periods
The power cord of the appliance should be unplugged from the outlet/The batteries should be removed when the appliance is to be left unused for a long period of time.

2025.02.17 16:10:26 +08'00'

TABLE OF CONTENTS

IMPORTANT SAFETY INSTRUCTIONS		3
1	INTRODUCTIONS	7
2	WHAT'S IN THE BOX	7
3	PRODUCT OVERVIEW	8
4	SPEAKER/POWER WIRE SOCKET DIAGRAM	9
5	REMOTE CONTROL	10
6	MOUNTING	12
7	PLACEMENT	13
8	GENERAL OPERATION	13
9	FM OPERATION	14
10	AUX OPERATION	15
11	OPTICAL IN OPERATION	15
12	HDMI ARC OPERATION	16
13	BLUETOOTH OPERATION	16
14	miZONE™ OPERATION	17
15	RESTORE FACTORY SETTINGS	17
16	TROUBLESHOOTING	18
17	PRODUCT SPECIFICATIONS	18

2025.02.
17
16:10:30
+08'00'

2025.02.17 16:10:35 +08'00'

1 INTRODUCTIONS

Thank you for purchasing the JBL AURA-CUBE Wall Mount Stereo which is designed to bring an extraordinary sound experience to your entertainment system. We encourage you to take a few minutes to read through this manual, which describes the product and includes step-by-step instructions for setting up and getting started.

2 WHAT'S IN THE BOX

Unpack the box carefully and ensure that the following parts are included.

AURA-CUBE Wall Mount Stereo

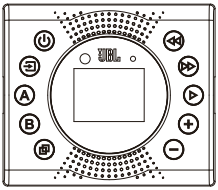

Remote Control

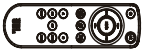

User Manual

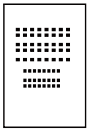

Quick Start Guide

"AAA" Batteries X 2

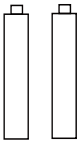

Wire harness for speaker and power supply

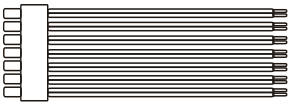

DC harness

2025.02.17 16:10:40 +08'00'

3 PRODUCT OVERVIEW

Controls and Features

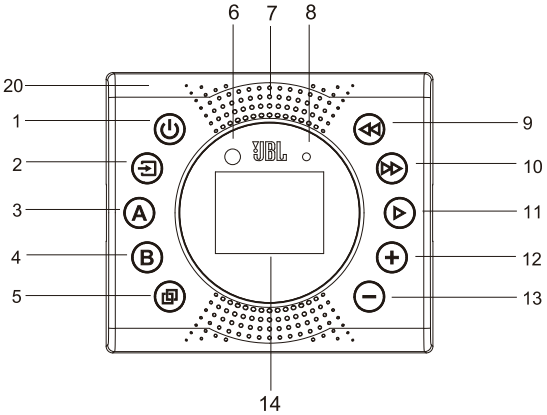

Connectors

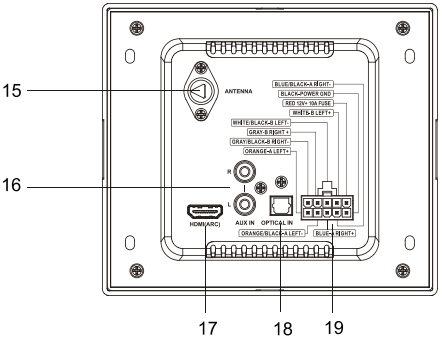

1. Power Button
2. Source Button
3. Audio Zone A
4. Audio Zone B
5. Pair Button
6. Remote Sensor
7. CUBE Parametric Lighting Feature
8. Light Sensor for Display Brightness
9. Previous Button
10. Next Button
11. Play/Pause Button
12. Volume Up Button
13. Volume Down Button
14. Display
15. Antenna Connector
16. AUX Jacks
17. HDMI (ARC) Port
18. OPTICAL IN Jack
19. Speaker/Power Wire Sockets
20. Reset Hole (inside)

2025.02.17 16:10:44 +08'00'

4 SPEAKER/POWER WIRE SOCKET DIAGRAM

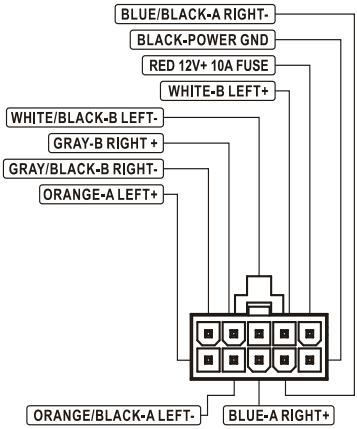

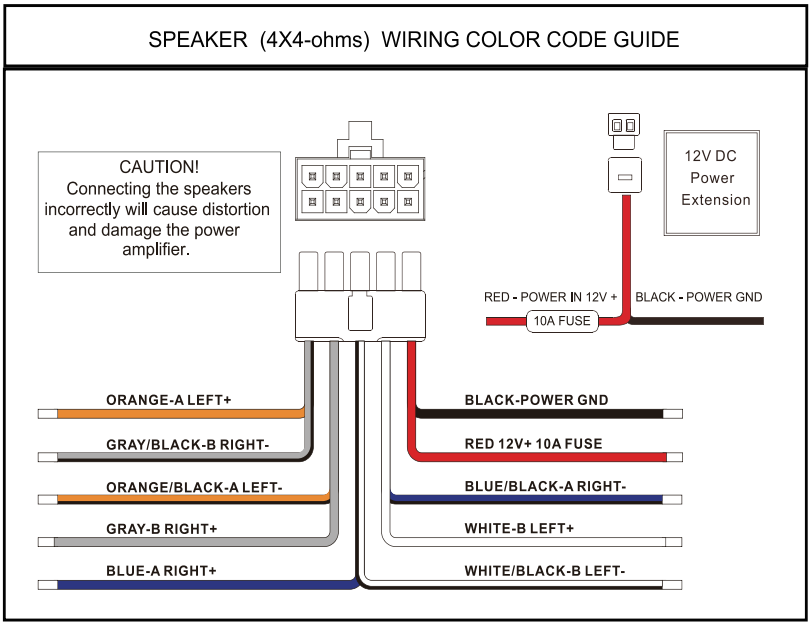

5 REMOTE CONTROL

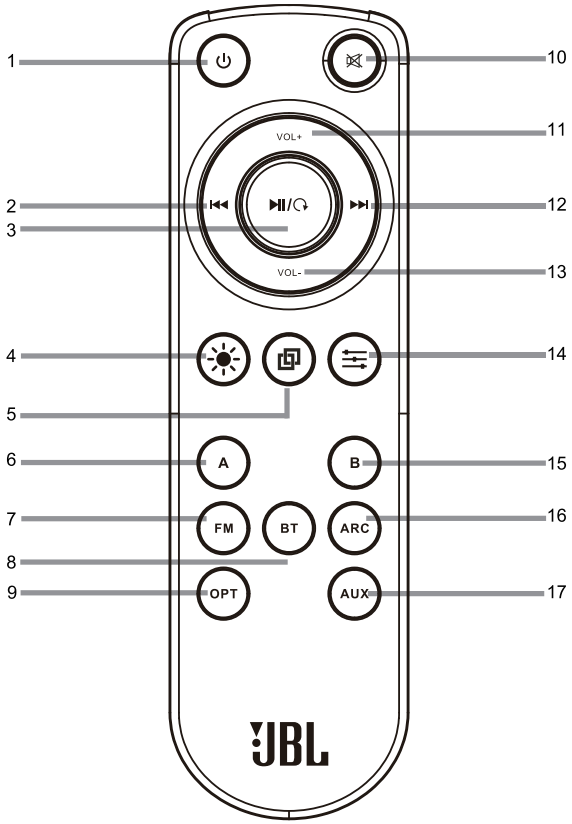

1. Power Button
2. Previous Button
3. Play/Pause, Memory/Preset/ Preset Play Button
4. Light Effect Button
5. Pair Button
6. Zone A Button
7. FM Button
8. BT Button
9. OPT Button
10. Mute Button
11. VOL+ Button
12. Next Button
13. VOL- Button
14. EQ Button
15. Zone B Button
16. ARC Button
17. AUX Button

REMOTE CONTROL BATTERY INSTALLATION

1. Slide and lift the battery door.
2. Install 2 (two) AAA size batteries into the battery compartment as indicated by the polarity markings.

3. Replace the battery door.

Battery Precautions:

Follow these precautions when using a battery in this device:

1. Use only the size and type of battery specified.
2. Be sure to follow the correct polarity when installing the battery as indicated in the battery compartment. A reversed battery may cause damage to the device.
3. Do not mix different types of batteries together (e.g. Alkaline and Carbon-zinc) or old batteries with fresh ones.
4. If the batteries in the device are consumed or the device will not be used for a long period of time, remove the batteries to prevent damage or injury from possible battery leakage.
5. Do not try to recharge the battery not intended to be recharged; it can overheat and rupture.(Follow battery manufacturer's directions.)
6. Do not dispose of battery in fire. Battery may explode or leak.
7. Clean the battery contacts and those of the device prior to battery installation.

REMOTE CONTROL WORKING RANGE

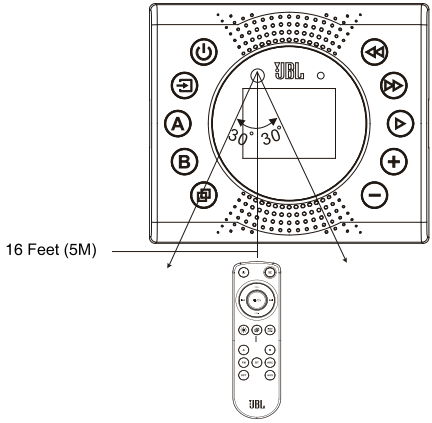

Note:

1. When there is an obstacle between the unit and the Remote Control, the Remote Control may not operate.
2. When direct sunlight, an incandescent lamp, fluorescent lamp or any other strong light shines on the remote sensor of the unit, the remote operation may be unstable.

6 MOUNTING

Fig. A

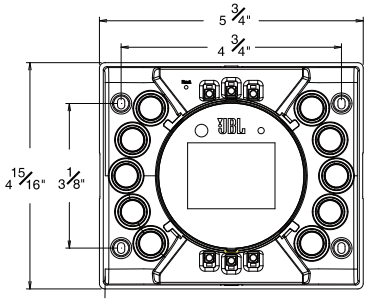

Fig. B

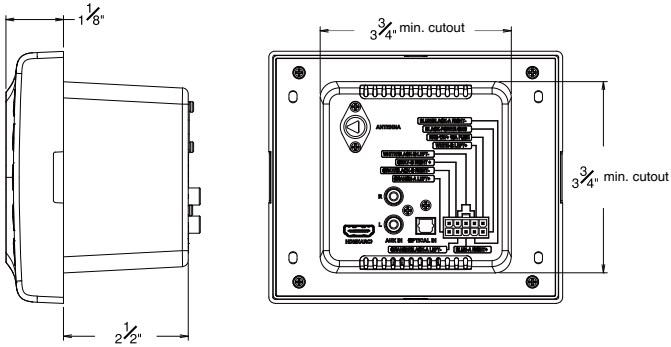

Fig. C

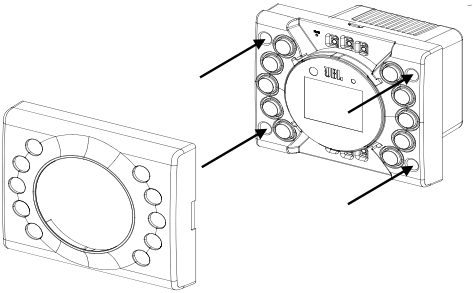

1. Grasp the front cover, and pull it off the main unit.
2. Predrill 4 mounting holes as shown in Fig. A. Select fasteners (not included) suitable for the mounting materials.
3. Cut out opening size as shown in Fig. B.
4. Attach the main unit with 4 fasteners. Push the cover gently onto the CUBE, and press firmly as shown in Fig. C.

7 PLACEMENT

When placing the media center in any type of enclosed space, be sure to allow space around it for ventilation.
If placing in a tight space without ventilation, heat generated from the unit could produce a potential heat hazard.

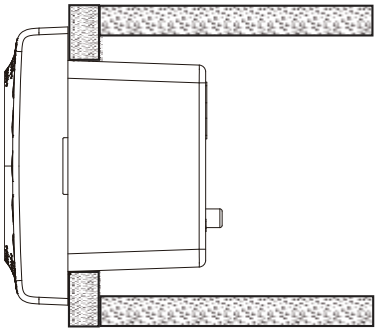

8 GENERAL OPERATION

1. Press the ⏻ Power button on the front panel or Remote Control to power on from standby mode.
2. Press the button on the front panel repeatedly or press the FM, OPT, AUX, BT, ARC button on the Remote Control to switch to desired mode.
3. During Playback:

~ Press the VOL+/- buttons on the Remote Control or +/- on the front panel to adjust volume level as desired.
~ Press button on the Remote Control to mute the sound on all active zones. Press again to resume.
~ Press A or B button on the Remote Control or on the front panel to switch ON or OFF the corresponding audio zone A/B speakers.
~ Press ☀ button on the Remote Control to change the visualization of the CUBE PARAMETRIC LIGHTING (MOOD - NEUTRAL - OFF).
~ Press button on the Remote Control repeatedly to adjust BASS and TREBLE. Press ⏮ or ⏭ button to change the value.

4. When finished listening, press the ⏻ button to enter standby mode.
5. If the unit is not used for long period of time, please disconnect power.

9 FM OPERATION

BEFORE OPERATION

Before operation, Insert the Antenna into the ANTENNA Jack on rear panel.	Cable from FM antenna (not supplied)

SEARCHING STATION

1. Power ON the CUBE Wall Mount Stereo.
2. Press the button repeatedly until FM appears on the display. Or press FM button on the Remote Control.
3. Press and hold the ⏮ or ⏭ button on the Remote Control or ◀◀ or ▶▶ button on the front panel to search previous or next available FM radio station automatically. When a strong station is found, the tuner will stop searching and playback.
4. Press the ⏮ or ⏭ button on the Remote Control or ◀◀ or ▶▶ button on the front panel to fine tune.

STATIONS PRESET STORAGE

Select an FM station. Press and hold the ▶II/C button on Remote Control or ▶ button on the front panel to display the storage location (01-10), then press the ⏮ or ⏭ button on Remote Control or ◀◀ or ▶▶ button on the front panel to select the storing location, then press the ▶II/C button on the Remote Control or ▶ on the front panel to confirm and complete station storage. A total of 10 stations can be stored.

PRESET RECALL

Press the ▶II/C button on the Remote Control or the ▶ button on the front panel repeatedly to select the preset station.

10 AUX OPERATION

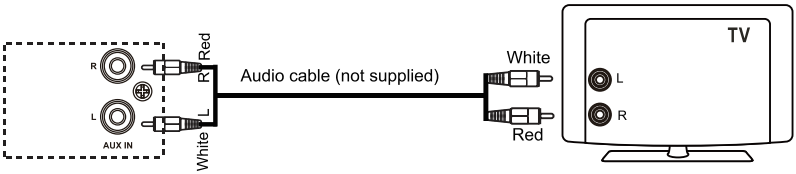

1. Connect one end of the audio cable to the AUX IN jacks on the back of the CUBE Wall Mount Stereo.
2. Connect the other end of the audio cable to the LINE OUT jacks on the TV / DVD player, etc.
3. Power ON the unit.
4. Press the button repeatedly until "AUX" appears on the display.
5. Or press AUX button on the Remote Control.
6. Play the audio in the external device.

NOTE:
You can also use a 3.5mm to RCA cable instead of RCA to RCA cable to connect the external player such as iPod, smartphone, MP3 player. (Insert the 3.5mm end of the cable into the Line out/Aux out/Earphone jack on the player)

11 OPTICAL IN OPERATION

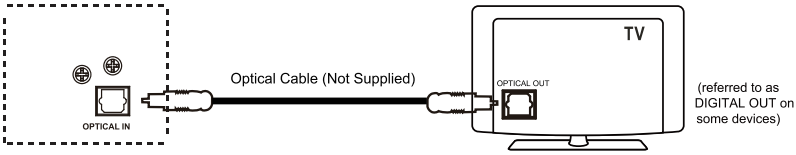

Before connecting, disconnect power.

1. Connect one end of optical connection cable (not supplied) to the OPTICAL IN jack on the rear of the CUBE Wall Mount Stereo.
2. Connect the other end to the OPTICAL OUT jack on TV Back panel.
3. Power ON the unit.
4. Press the button repeatedly until "OPTICAL" appears on the display. Or press OPT button on the Remote Control.
5. Play the audio in the external device as usual and set the desired volume.

Note:
If there is no audio output (only picture) or noise when your TV or DVD player is connected to the CUBE, please check DVD player or TV audio setting, and set the Digital Audio Output to "PCM" format.

12 HDMI (ARC) OPERATION

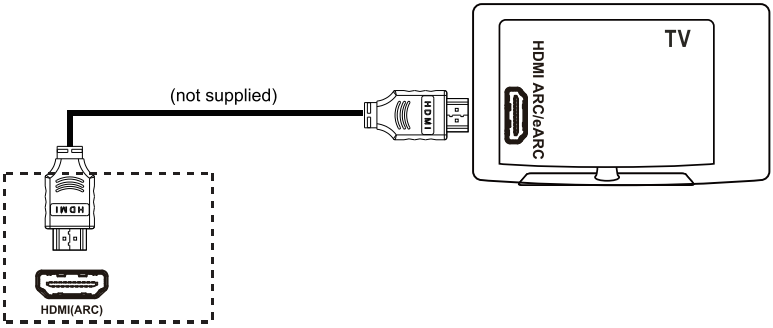

Before connecting, please disconnect power.

1. Connect as illustrated above and power on the unit.
2. Press the ARC button on remote control or press the button on unit repeatedly until "ARC" appears on display.
3. Select AUDIO RECEIVER or turn to ARC in the SETUP menu on the TV.
4. The audio will play through the CUBE Wall Mount Stereo.

Note:

- The TV must have the ARC capability, and connected to HDMI ARC jack on the capable TV.
- **If there is no audio output (only picture) or noise when your TV is connected to the CUBE, please check TV audio setting, and set the Digital Audio Output to "PCM" format.**

13 BLUETOOTH OPERATION

1. Power ON the unit.
2. Press the button repeatedly until "BT" appears on display and blinks. Or press BT button on Remote Control.
3. Turn on the Bluetooth compatible device and enter pairing mode. When the Bluetooth device finds the CUBE, "**JBL CUBE**" will appear on the display of the device.
4. After successfully pairing and connecting, the "BT" on display will stop blinking.
5. During playback:
   ~ Press the ⏮ or ⏭ button on the Remote Control or ◀◀ or ▶▶ button on the front panel to skip to previous or next track.
   ~ Press the ⏯ button on the Remote Control or ▶ button on the front panel to play or pause.
6. To pair to another Bluetooth Device, disconnect the current paired device by pressing the button on the front panel or on the Remote Control. The CUBE now can be discovered by other Bluetooth devices.

Note:
After first time pairing, the CUBE will connect to the last paired Bluetooth Device when both are within working range.

14 miZONE™ OPERATION

Enjoy your own music via Bluetooth device outside while the other family members are playing other sources or watching TV inside!

1. Press and hold the Zone B button on the front panel or the Remote control for 2 seconds and release, then the displayed text "ZONE *-***" under the VOL on the screen will be replaced by the texts "ZONE B-BT" and "ZONE A-***", which appear alternately.
2. Connect to the unit via Bluetooth by following procedures indicated in the Section "BLUETOOTH OPERATION".
3. The currently paired Bluetooth device will play in the Zone B speakers independently of those in Zone A.
4. Use your device's controls for volume level and content selection.
5. To cancel, press the zone B button.

Note:

- This function is not valid when the CUBE is in BT mode.
- While using this function, all the buttons on the front panel or the remote are only valid for the CUBE device, and you need to control the playback and volume on your paired smartphone or the similar BT transmitter devices, such as iPod, iPad, laptop, etc.

15 RESTORE FACTORY SETTINGS

By restoring the default settings defined at the factory, you remove all personalized settings from the AURA-CUBE Wall Mount Stereo.

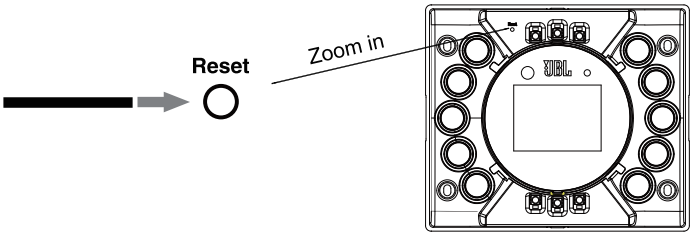

1. Power ON the unit.
2. Grasp the front cover, and pull it off the main unit.
3. Insert a stiff pole (e.g. straight paper clip, toothpick, etc.) into the Reset hole.
4. Press and hold the pole until all the backlights turn off, then release it.
5. Push the cover gently onto the main unit, then press it firmly.

16 TROUBLESHOOTING

Never try to repair the product yourself. If you have problems using this product, check the following before you request services.

System

The CUBE will not turn on.

- Check for properly connected power.

The AURA-CUBE has no response to button pressing.

- Restore the AURA-CUBE to factory settings.

Sound

No sound from the AURA-CUBE

- Make sure that the CUBE is not muted.
- Select the correct audio input source on the Remote Control or front panel.
- Connect the AURA-CUBE to your TV or other devices properly.
- Restore the AURA-CUBE to factory settings.

Distorted sound or echo

- If you play audio from your TV through the CUBE, make sure that your TV is muted or the built-in TV speaker is set to OFF.

Bluetooth

A device cannot be connected with the CUBE.

- Check if you have enabled Bluetooth on the device.
- If the CUBE has been paired with another Bluetooth device, press the button on Remote control or front panel.
- If your Bluetooth device has ever been paired with the CUBE, unpair the CUBE from the Bluetooth device, and then pair the Bluetooth device to the CUBE again.

Poor audio quality from a connected Bluetooth device

- The Bluetooth reception is poor. Move the source device closer to the CUBE, or remove any obstacle between the source device and the CUBE.

The connected Bluetooth device connects and disconnects constantly.

- The Bluetooth reception is poor. Move the source device closer to the CUBE, or remove any obstacle between the source device and the soundbar.

FM

No station.

- The FM antenna is not plugged in.

Remote Control

The Remote Control does not work.

- Check if the batteries are drained. If so, replace them with new ones.
- Reduce the distance and angle between the Remote Control and the CUBE.

17 PRODUCT SPECIFICATIONS

General specification:

- Power supply: 10 -14V,10A
- Total speaker power output (Max.@THD 10%): 80W
- Output power (Max.@THD 10%): 4 x 20W

Wireless specification:

- Bluetooth version: 5.0
- Bluetooth working range: up to 10 meters

FM specification:

- FM coverage: 87.5-108.0MHz

Dimension:

- CUBE: L x H x D (146.1 x 125.3 x 90.5mm)
  5 3/4" x 4 15/16" x 3 1/2"

RIVERPARK

www.riverparkinc.com

© 2021 RIVERPARK Inc.

V. 112021