说明书
大小: 210*148mm
材质: 80g书纸
颜色: 黑白印刷
用量: 1pc

包装方式: 与QSG一起装说明书胶袋

品号32280104200971

AURA WALL MOUNT STEREO

OWNER'S MANUAL

IMPORTANT SAFETY INSTRUCTIONS

CAUTION
RISK OF ELECTRIC SHOCK
DO NOT OPEN

CAUTION: TO REDUCE THE RISK OF ELECTRIC SHOCK, DO NOT REMOVE COVER (OR BACK). NO USER-SERVICEABLE PARTS INSIDE. REFER SERVICING TO QUALIFIED SERVICE PERSONNEL.

The lighting flash with arrowhead symbol within an equilateral triangle is intended to alert the user to the presence of uninsulated "dangerous voltage" within the product's enclosure that may be of sufficient magnitude to constitute a risk of electric shock to persons.

The exclamation point within an equilateral triangle is intended to alert the user to the presence of important operating and maintenance (servicing) instructions in the literature accompanying the appliance.

WARNING

USE UNDER SUPERVISION OF AN ADULT DUE TO LONG CORD

This unit has a long cord that can easily be tripped on or pulled on, causing injury, Please make sure it is arranged so it will not drape over a tabletop, etc. Where it can be pulled on by children or tripped over accidentally.

FCC NOTICE:
This equipment has been tested and found to comply with the limits for a Class B digital device, pursuant to part 15 of the FCC Rules. These limits are designed to provide reasonable protection against harmful interference in a residential installation. This equipment generates, uses and can radiate radio frequency energy and, if not installed and used in accordance with the instructions, may cause harmful interference to radio communications. However, there is no guarantee that interference will not occur in a particular installation. If this equipment does cause harmful interference to radio or television which can be determined by reception, turning the equipment off and on, the user is encouraged to try to correct the interference by one or more of the following measures:

- Reorient or relocate the receiving antenna. Increase the separation between the equipment and receiver.
- Connect the equipment into an outlet with a circuit different from that to which the receiver is connected.
- Consult the dealer or an experienced radio/TV technician for help.

FCC WARNING:
To assure continued compliance, follow the attached installation instructions and use only shielded cables when connecting to other devices. Modifications not authorized by the manufacturer may void user`s authority to operate this device.

WARNING:
TO REDUCE THE RISK OF FIRE OR ELECTRIC SHOCK, DO NOT EXPOSE THIS PRODUCT TO RAIN OR MOISTURE.

WARNING:
TO REDUCE THE RISK OF FIRE OR ELECTRIC SHOCK, AND ANNOYING INTERFERENCE, USE THE RECOMMENDED ACCESSORIES ONLY.

Before using the unit, be sure to read all operating instructions carefully. Please note that these are general precautions and may not pertain to your unit.

1) Read these instructions
All the safety and operating instructions should be read before the product is operated.

2) Keep these instructions
The safety and operating instructions should be retained for future reference.

3) Heed all warnings
All warnings on the product and in the operating instructions should be adhered to.

4) Follow all instructions
All operating and use instructions should be followed.

5) Do not use this apparatus near water
Do not use this product near water and moisture, for example: near a bathtub, washbowl, kitchen sink or laundry tub; in a wet basement; or near a swimming pool.

6) Clean only with dry cloth
Unplug this product from the wall outlet before cleaning. Do not use liquid cleaners or aerosol cleaners. Use a dry cloth for cleaning.

7) Do not block any ventilation openings. Install in accordance with the manufacturer's instructions
Slots and openings in the cabinet and in the back or bottom are provided for ventilation, to ensure reliable operation of the product and to protect it from overheating. These openings must not be blocked or covered. The openings should never be blocked by placing the product on a bed, sofa, rug or other similar surface. This product should never be placed near or over a radiator or heat source. This product should not be placed in a built-in installation such as a bookcase or rack unless proper ventilation is provided or the manufacturer's instructions have been adhered to.

8) Do not install near any heat sources such as radiators, heat registers, stoves, or other apparatus(including amplifiers) that produce heat.

9) Do not defeat the safety purpose of the polarized or grounding-type plug. A polarized plug has two blades with one wider than other. A grounding type plug has two blades and a third grounding prong. The wide blade or the third prong are provided for your safety. If the provided plug does not fit into your outlet, consult an electrician for replacement of the obsolete outlet.

10) Protect the power cord from being walked on or pinched particularly at plugs, convenience receptacles, and the point where they exit from the apparatus.

11) Only use attachments/accessories specified by the manufacturer.

12) Unplug this apparatus during lightning storms or when unused for long periods of time
To protect your product from a lightning storm, or when it is left unattended and unused for long periods of time, unplug it from the wall outlet and disconnect the antenna or cable system. This will prevent damage to the product due to lightning and power-line surges.

13) Refer all servicing to qualified service personnel. Servicing is required when the apparatus has been damaged in any way, such as power-supply cord or plug is damaged, liquid has been spilled or objects have fallen into the apparatus, the apparatus has been exposed to rain or moisture does not operate normally, or has been dropped.

14) Power source
This product should be operated only from the type of power source indicated on the marking label. If you are not sure of the type of power supply to your home, consult your appliance dealer or local power company. For products intended to operate from battery power, or other source, refer to the operation instructions.

15) Service
Do not attempt to service this product yourself as opening or removing covers may expose you to dangerous voltage or other hazards. Refer all servicing to qualified service personnel.

WARNING:
To reduce the risk of fire or electric shock, do not expose this apparatus to rain or moisture. The apparatus shall not be exposed to dripping or splashing and that objects filled with liquids, such as vases shall not be placed on apparatus.

TABLE OF CONTENTS

IMPORTANT SAFETY INSTRUCTIONS 2

1 INTRODUCTION 5

2 WHAT'S IN THE BOX 5

3 PRODUCT OVERVIEW 6

4 SPEAKER/POWER WIRE SOCKET DIAGRAM 7

5 REMOTE CONTROL 8

6 MOUNTING 10

7 PLACEMENT 11

8 GENERAL OPERATION 11

9 ADDING OPTIONAL EXTERNAL POWERED SUBWOOFER 12

10 FM OPERATION 13

11 USB OPERATION 14

12 AUX 1 OPERATION 14

13 AUX 2 OPERATION 15

14 OPTICAL IN OPERATION 15

15 HDMI IN AND HDMI OUT 16

16 HDMI OUT (ARC) ONLY 17

17 BLUETOOTH OPERATION 18

18 miZONE™ OPERATION 18

19 LEARN OPERATION 19

20 RESTORE FACTORY SETTINGS 19

21 TROUBLESHOOTING 20

22 PRODUCT SPECIFICATIONS 20

1 INTRODUCTION

Thank you for purchasing the JBL AURA Wall Mount Stereo which is designed to bring an extraordinary sound experience to your entertainment system. We encourage you to take a few minutes to read through this manual, which describes the product and includes step-by-step instructions for setting up and getting started.

2 WHAT'S IN THE BOX

Unpack the box carefully and ensure that the following parts are included.

AURA Wall Mount Stereo

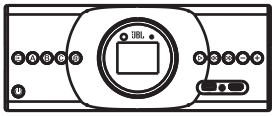

"AAA" Batteries X 2

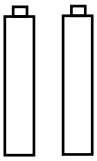

Remote Control

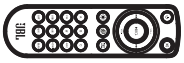

Wire harness for speaker and power supply

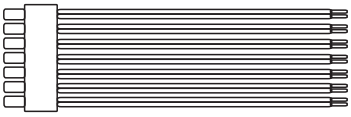

User manual

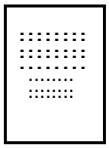

DC harness

Quick Start Guide

3 PRODUCT OVERVIEW

Controls and Features

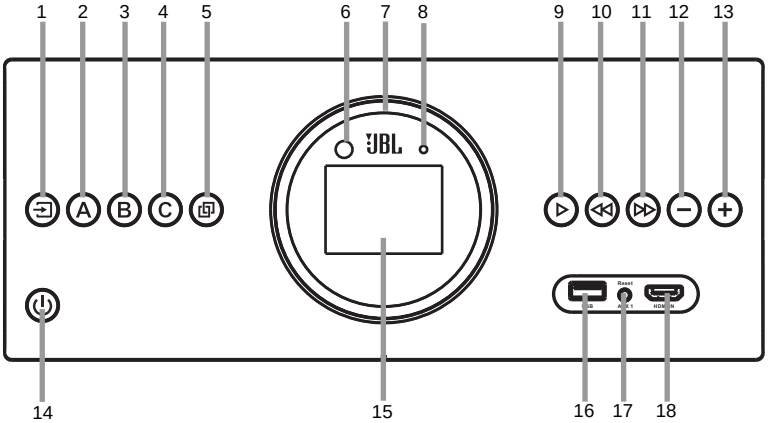

Connectors

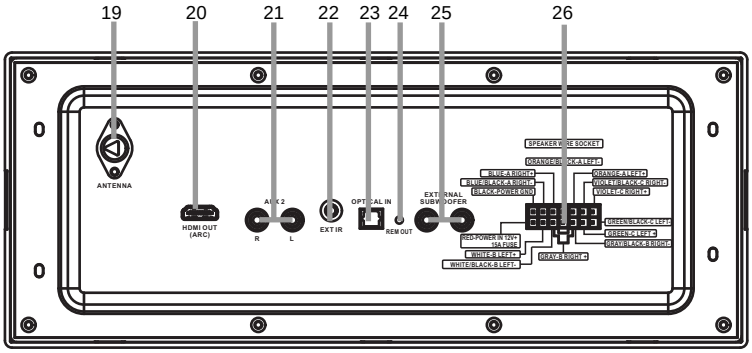

1. Source Button
2. Audio Zone A
3. Audio Zone B
4. Audio Zone C
5. Pair Button
6. Remote Sensor
7. AURA Ring
8. Light Sensor for Display Brightness
9. Play/Pause Button
10. Previous Button
11. Next Button
12. Volume Down Button
13. Volume Up Button
14. Power Button
15. Display
16. USB Port
17. AUX 1 Jack/Reset
18. HDMI IN Port
19. Antenna Connector
20. HDMI OUT (ARC) Port
21. AUX 2 Jacks
22. External IR Jack
23. OPTICAL IN Jack
24. REM OUT Cable (Amp. Pwr. Trigger)
25. External Subwoofer Jacks
26. Speaker/Power Wire Sockets

4 SPEAKER/POWER WIRE SOCKET DIAGRAM

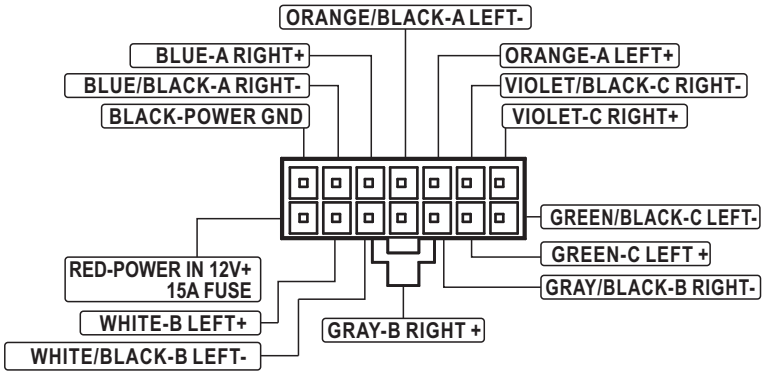

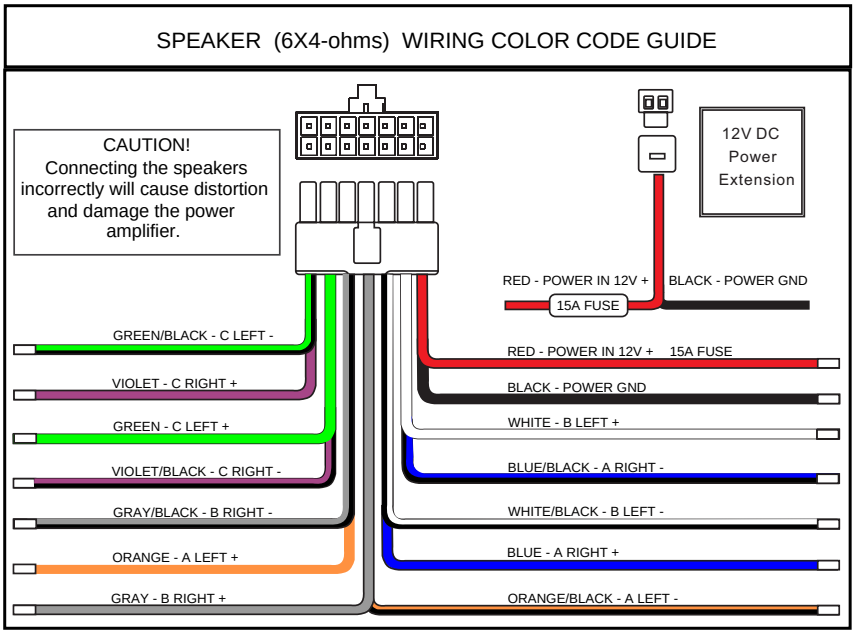

5 REMOTE CONTROL

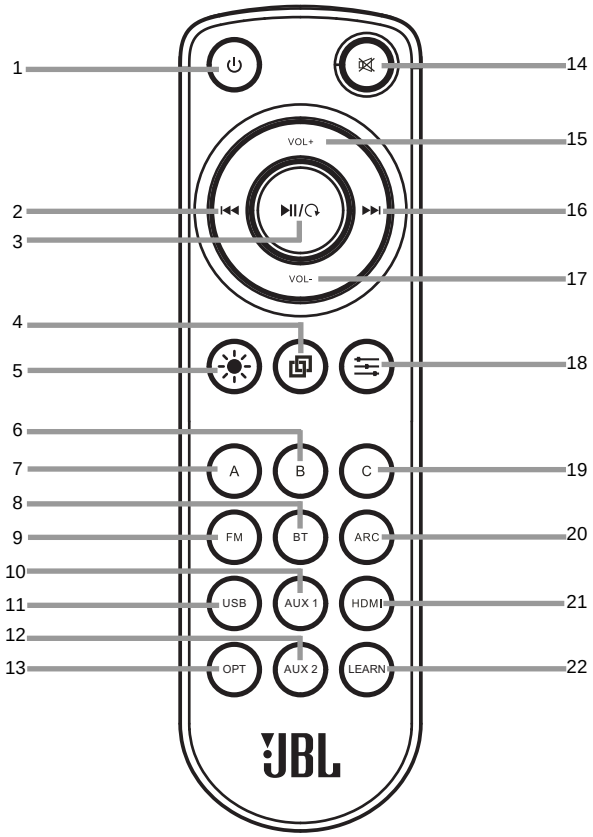

1. Power Button
2. Previous Button
3. Play/Pause,Memory/Preset/ Preset Play Button
4. Pair Button
5. Light Effect Button
6. Zone B Button
7. Zone A Button
8. BT Button
9. FM Button
10. AUX 1 Button
11. USB Button
12. AUX 2 Button
13. OPT Button
14. Mute Button
15. VOL+ Button
16. Next Button
17. VOL- Button
18. EQ Button
19. Zone C Button
20. ARC Button
21. HDMI Button
22. LEARN Button

OPTIONAL EXTERNAL REMOTE SENSOR

EXT IR (External Remote Sensor) Jack on rear panel

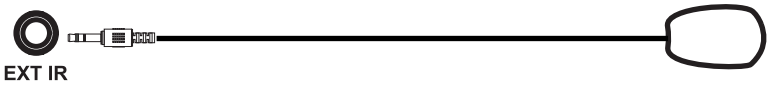

If using the external optional remote sensor, insert the plug into the EXT IR Jack as shown on above picture.

REMOTE CONTROL BATTERY INSTALLATION

1.Slide and lift the battery door.

2.Install 2 (two) AAA size batteries into the battery compartment as indicated by the polarity markings.

3.Replace the battery door.

Battery Precautions:

Follow these precautions when using a battery in this device:

1. Use only the size and type of battery specified.
2. Be sure to follow the correct polarity when installing the battery as indicated in the battery compartment. A reversed battery may cause damage to the device.
3. Do not mix different types of batteries together (eg.Alkaline and Carbon-zinc) or old batteries with fresh ones.
4. If the batteries in the device are consumed or the device will not be used for a long period of time, remove the batteries to prevent damage or injury from possible battery leakage.
5. Do not try to recharge the battery not intended to be recharged; it can overheat and rupture. (Follow battery manufaturer's directions.)
6. Do not dispose of battery in fire. Battery may explode or leak.
7. Clean the battery contacts and also those of the device prior to battery installation.

REMOTE CONTROL WORKING RANGE

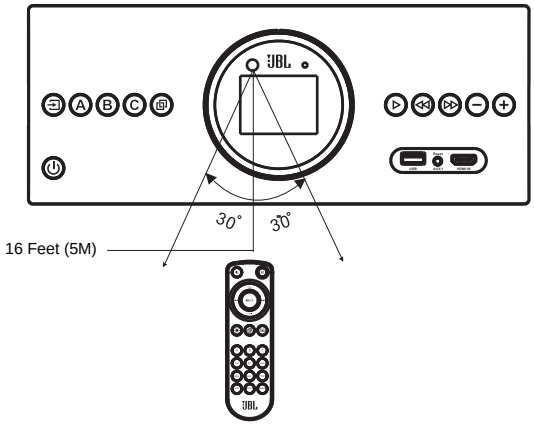

Remarks:

1. When there is an obstacle between the unit and the Remote Control, the Remote Control may not operate.
2. When direct sunlight, an incandescent lamp, fluorescent lamp or any other strong light shines on the remote sensor of the unit, the remote operation may be unstable.

6 MOUNTING

Fig. A

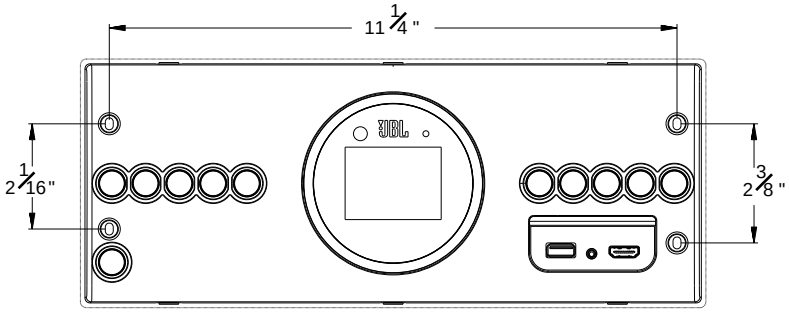

Fig. B

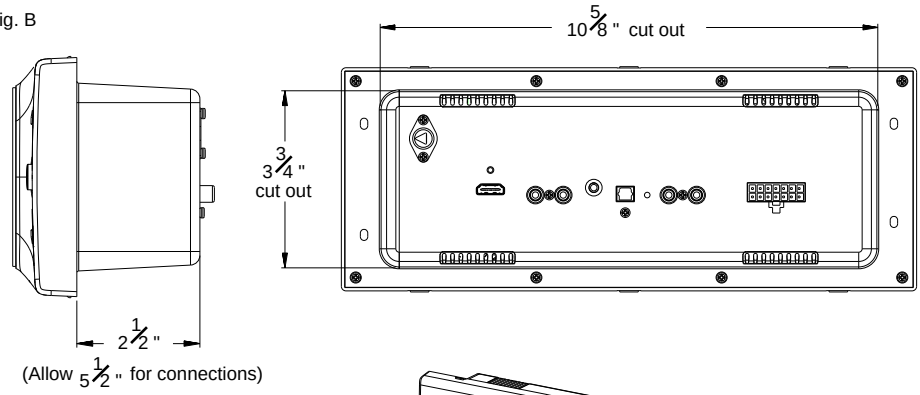

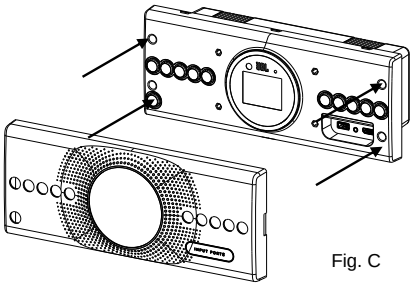

Fig. C

1. Predrill 4 mounting holes as shown in Fig.A. Select fasteners (not included) suitable for the mounting materials.
2. Cut out opening size as shown in Fig. B.
3. Attach the AURA with 4 fasteners. Push the cover gently onto the AURA and press firmly as shown in Fig. C.

7 PLACEMENT

When placing the media center in any type of enclosed space, be sure to allow space around it for ventilation.

If placing in a tight space without ventilation, heat generated from the unit could produce a potential heat hazard.

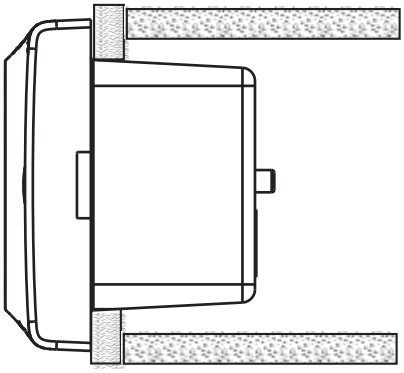

8 GENERAL OPERATION

1. Press the ⏻ Power button on the front panel or Remote Control to power on from standby mode.

2. Press the button on the front panel repeatedly or press the FM, USB, AUX 1, AUX 2, OPT, HDMI, ARC, BT button on the Remote Control to switch to desired mode.

3. During Playback:

~ Press the VOL+/- buttons on the Remote Control or +/- on the front panel to adjust volume level as desired.

~ Press button on the Remote Control to mute the sound on all active zones. Press again to resume.

~ Press A, B or C button on the Remote Control or on the front panel to switch ON or OFF the corresponding audio zone A/B/C speakers.

~ Press button on the Remote Control to change the visualization of the AURA Ring (MOOD-NEUTRAL-PULSE).

~ Press button on the Remote Control repeatedly to switch to Rock, Jazz, Pop or Classic EQ mode.

4. When finished listening, press the ⏻ button to enter standby mode.

5. If the unit is not used for long period of time, please disconnect power.

9 ADDING OPTIONAL EXTERNAL POWERED SUBWOOFER

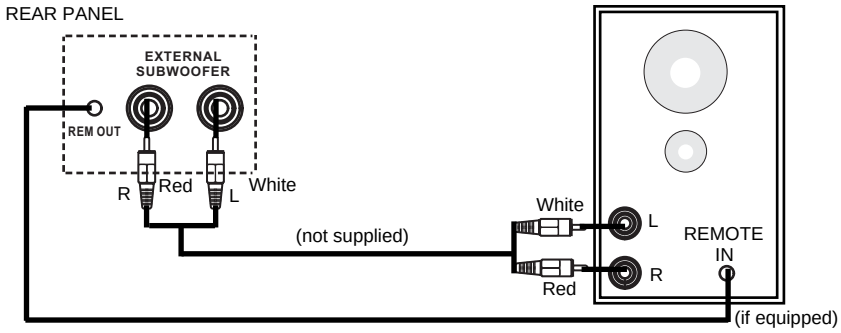

NOTE: Before connecting, disconnect power to AURA and the powered subwoofer.

1. Connect the audio cable as above, connect the REM OUT wire to the subwoofer REMOTE IN wire, if equipped.
2. Power on the AURA Wall Mount Stereo.
3. Play the music as usual and set the desired volume.

NOTE: Subwoofer will play with ZONE "A" only. Refer to powered subwoofer instruction or user manual for further instructions.

10 FM OPERATION

BEFORE OPERATION

Before operation, Insert the Antenna into the ANTENNA Jack on rear panel.	Cable from FM antenna (not supplied)

SEARCHING STATION

1. Power ON the AURA Wall Mount Stereo.
2. Press the button repeatedly until FM appears on the display. Or press FM button on the Remote Control.
3. Press and hold the ⏮ or ⏭ button on the Remote Control or ◀◀ or ▶▶ button on the front panel to search previous or next available FM radio station automatically. When a strong station is found, the tuner will stop searching and playback.
4. Press the ⏮ or ⏭ button on the Remote Control or ◀◀ or ▶▶ button on the front panel to fine tune.

STATIONS PRESET STORAGE

Select an FM station. Press and hold the ⏯ button on Remote Control or ▶ button on the front panel to display the storage location (01-10), then press the ⏮ or ⏭ button on Remote Control or ◀◀ or ▶▶ button on the front panel to select the storing location, then press the ⏯ button on the Remote Control or ▶ on the front panel to confirm and complete station storage. A total of 10 stations can be stored.

PRESET RECALL

Press the ⏯ button on the Remote Control or the ▶ button on the front panel repeatedly to select the preset station.

11 USB OPERATION

1. Insert the USB device to the USB port on front of the AURA Wall Mount Stereo.

2. Power ON the unit.

3. Press the button repeatedly until "USB" appears on the display.
   Or press USB button on the Remote Control.

4. Play the audio in the external device as usual and set the desired volume.

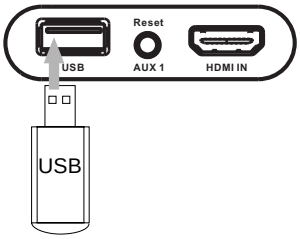

5. During playback:
   ~ Press the ⏮ or ⏭ button on the Remote Control or ◀◀ or ▶▶ button on the front panel to skip to previous or next track.
   ~ Press the ⏯ button on the Remote Control or ▶ button on the front panel to play or pause.

NOTE:
The USB port can also be used for charging.

12 AUX 1 OPERATION

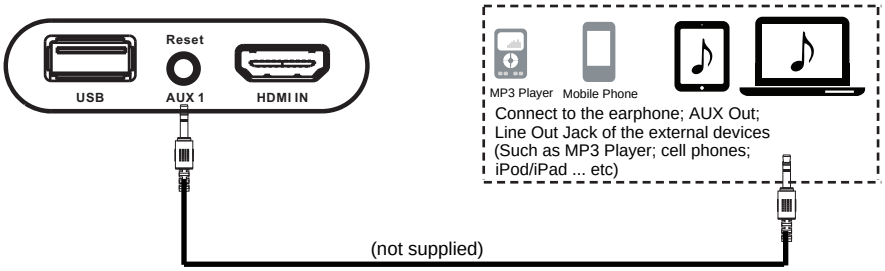

1. Connect one end of audio connection cable to the AUX 1 jack on the front of the AURA Wall Mount Stereo.

2. Connect the other end to the Audio out/Line out/earphone jack on the external player
   (such as iPod, iPhone, iPad, MP3 player... etc.)

3. Power ON the unit.

4. Press the button repeatedly until "AUX 1" appears on the display.
   Or press AUX 1 button on the Remote Control.

5. Play the audio in the external device as usual and set the desired volume.

13 AUX 2 OPERATION

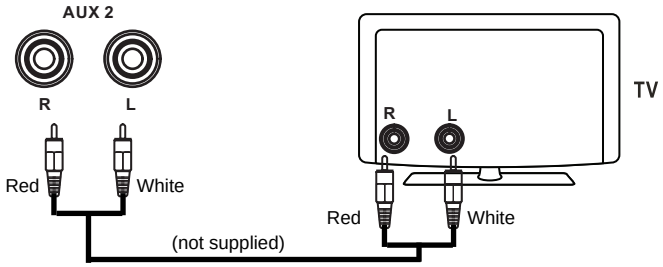

1. Plug one end of the audio cable into the AUX 2 jack(L&R) on the rear of AURA Wall Mount Stereo.
2. Plug the other end of the audio cable into the LINE OUT jack(L&R) on TV, DVD Player etc.
3. Power ON the unit.
4. Press the button repeatedly until "AUX 2" appears on the display.
   Or press AUX 2 button on the Remote Control.
5. Play the audio in the external device as usual and set the desired volume.

14 OPTICAL IN OPERATION

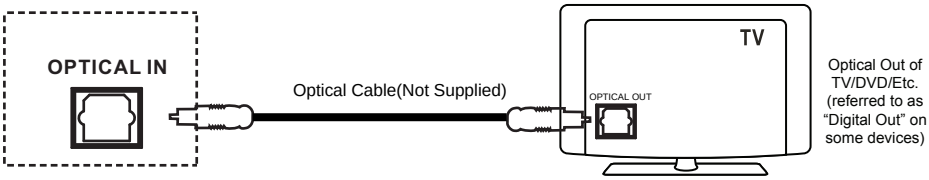

NOTE: Before connecting, disconnect power.

1. Connect one end of optical connection cable (not supplied) to the optical in jack on the rear of the AURA Wall Mount Stereo.
2. Connect the other end to the optical out jack of the DVD or TV back panel.
3. Power ON the unit.
4. Press the button repeatedly until "OPTICAL" appears on the display.
   Or press OPT button on the Remote Control.
5. Play the audio in the external device as usual and set the desired volume.

NOTE:
If there is no audio output (only picture) when your TV or DVD player is connected to the AURA, please check DVD or TV audio setting, and set the digital audio output to PCM format.

15 HDMI IN AND HDMI OUT

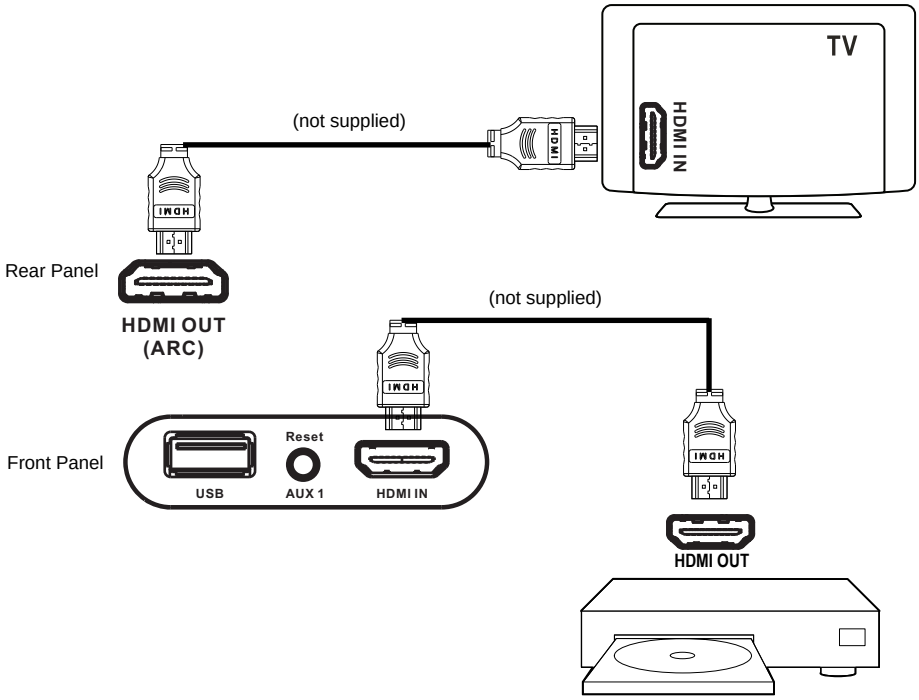

Any HDMI device (like DVD, Gaming system, etc.)

1. Connect as illustrated above and power on the unit.
2. Press the button repeatedly until the "HDMI" appears on display.
   Or press HDMI button on the Remote Control.
3. Play any HDMI device. Video will appear on TV and audio through the AURA.

16 HDMI OUT (ARC) ONLY

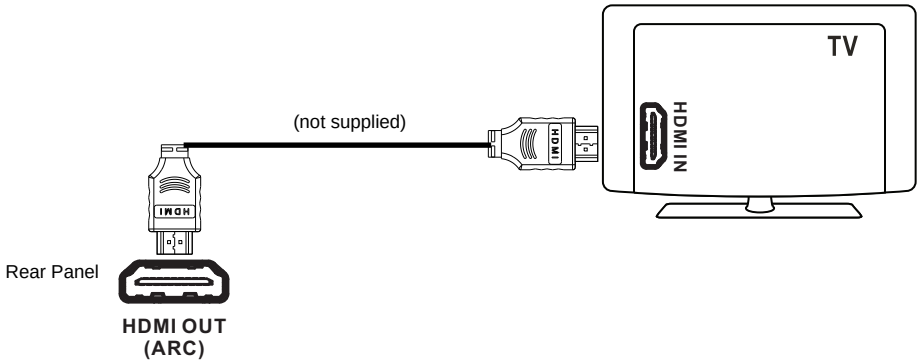

NOTE: Before connecting, please disconnect power.

1. Connect as illustrated above and power on the unit.

2. Press the ARC button on remote control or press the button on unit repeatedly until " ARC " appears on display.

3. Connect the video devices to the TV as usual. The audio will play through the AURA Wall Mount Stereo.

NOTE:

The TV must have the ARC capability, and connected to HDMI ARC jack on the capable TV.

17 BLUETOOTH OPERATION

1. Power ON the unit.
2. Press the button repeatedly until "BT" appears on display and blinks.
   Or press BT button on Remote Control.
3. Turn on the Bluetooth compatible device and enter pairing mode.
   When the Bluetooth device finds the AURA, "JBL AURA" will appear on the display of the device.
4. After successfully pairing and connecting, the "BT" on display will stop blinking.
5. During playback:
   ~ Press the ⏮ or ⏭ button on the Remote Control or ◀◀ or ▶▶ button on the front panel to skip to previous or next track.
   ~ Press the ⏯ button on the Remote Control or ▶ button on the front panel to play or pause.
6. To pair to another Bluetooth Device, disconnect the current paired device by pressing the button on the front panel or on the Remote Control. The AURA now can be discovered by other Bluetooth devices.

NOTE: After first time pairing, the AURA will connect to the last paired Bluetooth Device when both are within working range.

18 miZONE™ OPERATION

Play your Bluetooth® device outside while watching TV inside!!

1. Power ON the unit.
2. Press and hold either the Zone B or Zone C button on the front panel or the Remote control for 2 seconds and release.
3. The currently paired Bluetooth device will play in the selected Zone independently of the other speaker zone(s).
4. Use your device's controls for volume level and content selection.
5. To cancel, press the selected zone button.

19 LEARN OPERATION

Control the AURA with another Remote Control
(Available only for the Power, Volume Up, Volume Down and Mute functions.)

1. Power ON the unit.
2. Press and hold the LEARN button on the Remote Control for 2 seconds and release. "LEARN" appears on the display.
3. Press the ⏻ button on the AURA Remote Control. "POWER" flashes on the display. Press the Power button on your other remote control and "POWER" disappears from the display.
4. Repeat Step 3 for Volume+, Vol- and 🔇 functions.
5. Press and hold the LEARN button on the Remote Control for 2 seconds and release to exit from the LEARN mode.

20 RESTORE FACTORY SETTINGS

By restoring the default settings defined at the factory, you remove all personalized settings from the AURA Wall Mount Stereo.

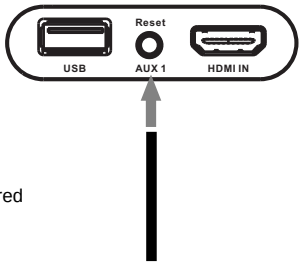

1. Power ON the unit.
2. Adjust volume level to minimum.
3. Insert a straightened paper clip or toothpick into the Reset hole. Press on the button at the back of the hole until the AURA is restored to the factory setting.

21 TROUBLESHOOTING

Never try to repair the product yourself. If you have problems using this product, check the following before you request services.

System

The AURA will not turn on.

- Check for properly connected power.

The AURA has no response to button pressing.

- Restore the AURA to factory settings.

Sound

No sound from the AURA

- Make sure that the AURA is not muted.
- Select the correct audio input source on the Remote Control or front panel.
- Connect the AURA to your TV or other devices properly.
- Restore the AURA to its factory settings.

Distorted sound or echo

- If you play audio from your TV through the AURA, make sure that your TV is muted or the built-in TV speaker is set to OFF.

Bluetooth

A device cannot be connected with the AURA.

- Check if you have enabled Bluetooth on the device.
- If the AURA has been paired with another Bluetooth device, press the button on Remote control or front panel.
- If your Bluetooth device has ever been paired with the AURA, unpair the AURA from the Bluetooth device, and then pair the Bluetooth device to the AURA again.

Poor audio quality from a connected Bluetooth device

- The Bluetooth reception is poor. Move the source device closer to the AURA, or remove any obstacle between the source device and the AURA.

The connected Bluetooth device connects and disconnects constantly.

- The Bluetooth reception is poor. Move the source device closer to the AURA, or remove any obstacle between the source device and the soundbar.

FM

No station.

- The FM antenna is not plugged in.

Remote Control

The Remote Control does not work.

- Check if the batteries are drained. If so, replace them with new ones.
- Reduce the distance and angle between the Remote Control and the AURA.

22 PRODUCT SPECIFICATIONS

General specification:

- Power supply: 10 -14V,15A
- Total speaker power output (Max.@THD 10%): 120W
- Output power (Max.@THD 10%):6x20W

USB specification:

- USB rating:DC5V/1A
- Supporting file format:mp3

Wireless specification:

- Bluetooth version:5.0
- Bluetooth working range: up to 10 meters

FM specification:

- FM coverage: 87.5-108.0MHz

Dimension

- AURA: LxHxD(315x125x94mm)

  12 3/8" X4 15/14" X 3 3/4"

HDMI®
HIGH-DEFINITION MULTIMEDIA INTERFACE

FCC Caution:

This device complies with part 15 of the FCC Rules. Operation is subject to the following two conditions: (1) this device may not cause harmful interference, and (2) this device must accept any interference received, including interference that may cause undesired operation.

Any changes or modifications not expressly approved by the party responsible for compliance could void the user's authority to operate the equipment.

NOTE: This equipment has been tested and found to comply with the limits for a Class B digital device, pursuant to Part 15 of the FCC Rules. These limits are designed to provide reasonable protection against harmful interference in a residential installation. This equipment generates, uses and can radiate radio frequency energy and, if not installed and used in accordance with the instructions, may cause harmful interference to radio communications. However, there is no guarantee that interference will not occur in a particular installation.If this equipment does cause harmful interference to radio or television reception, which can be determined by turning the equipment off and on, the user is encouraged to try to correct the interference by one or more of the following measures:

-- Reorient or relocate the receiving antenna.

-- Increase the separation between the equipment and receiver.

-- Connect the equipment into an outlet on a circuit different
from that to which the receiver is connected.

-- Consult the dealer or an experienced radio/TV technician for help.

To maintain compliance with FCC ’ s RF Exposure guidelines, This equipment should be installed and operated with minimum distance between 20cm the radiator your body: Use only the supplied antenna.

RIVERPARK

www.riverparkinc.com

© 2020 RIVERPARK Inc.

V. 032020