MODEL:SBB-75136 / WMS-DVDZ3-SB / WMS-DVDZ3

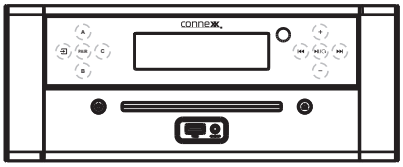

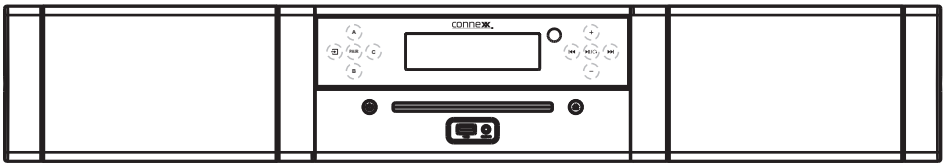

- INSTALLATION AND OPERATION MANUAL -
PLEASE READ INSTRUCTIONS CAREFULLY
AND KEEP FOR FUTURE REFERENCE

TABLE OF CONTENTS

INTRODUCTION.....3
FEATURES.....3
PARTS INCLUDED WITH MAIN UNIT.....3
IMPORTANT SAFETY INSTRUCTIONS.....4
ABOUT DISCS.....6
PLACING AND MOUNTING.....7
GENERAL VIEW.....8
SPEAKER/POWER WIRE SOCKET DIAGRAM.....10
REMOTE CONTROL.....11
BATTERY INSTALLATION--REMOTE CONTROL.....12
GENERAL OPERATIONS.....13
LISTEN TO FM RADIO.....14
BLUETOOTH PAIRING AND PLAYBACK.....15
ADDING OPTIONAL EXTERNAL SUBWOOFER.....16
CONNECT USING OPTICAL.....17
CONNECT TO TV(ANALOG).....18
CONNECT USING HDMI.....19
AUX IN.....20
USB.....20
DVD.....21
SYSTEM SETUP.....23
DISC MAINTENANCE.....25
TROUBLESHOOTING GUIDE.....26
SPECIFICATIONS.....27

INTRODUCTION

Thank you for choosing a Connexx product. We hope you will find the instructions in this owner's manual clear and easy to follow. If you take a few minutes to review, you will learn how to use all the features of your new media center w/DVD for maximum enjoyment.

FEATURES

Features of the WMS-DVDZ3 media center w/DVD include:

DVD/CD player
Digital FM tuner w/10 presets
Bluetooth wireless technology
3 zone audio distribution
3 zone video distribution
3.5 mm aux input jack on front panel
USB input on front panel w/device charging capabilities
Digital Optical input on rear panel
Analog Stereo Input on Rear Panel
LED backlit controls
Wireless remote control included
HDMI (ARC) on rear panel

PARTS INCLUDED WITH MAIN UNIT

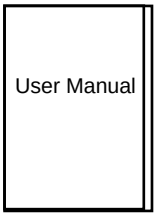

User Manual

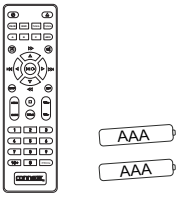

Remote Control with Two Batteries

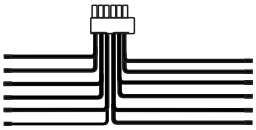

Wire Harness for Speakers

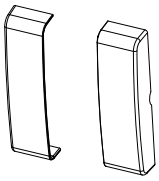

screw cover

DC Power Extension
(Red and Black) Wire

FM Antenna

IMPORTANT SAFETY INSTRUCTIONS

CAUTION
RISK OF ELECTRIC SHOCK
DO NOT OPEN

CAUTION: TO REDUCE THE RISK OF ELECTRIC SHOCK, DO NOT REMOVE COVER (OR BACK). NO USER-SERVICEABLE PARTS INSIDE. REFER SERVICING TO QUALIFIED SERVICE PERSONNEL.

The lighting flash with arrowhead symbol within an equilateral triangle is intended to alert the user to the presence of uninsulated "dangerous voltage" within the product's enclosure that may be of sufficient magnitude to constitute a risk of electric shock to persons.

The exclamation point within an equilateral triangle is intended to alert the user to the presence of important operating and maintenance (servicing) instructions in the literature accompanying the appliance.

DANGER:
Invisible and hazardous laser radiation when open and interlock failed or defeated. Avoid direct exposure to beam.

FCC NOTICE:

This equipment has been tested and found to comply with the limits for a Class B digital device, pursuant to part 15 of the FCC Rules. These limits are designed to provide reasonable protection against harmful interference in a residential installation. This equipment generates, uses and can radiate radio frequency energy and, if not Installed and used in accordance with the instructions, may cause harmful interference to radio communications. However, there is no guarantee that interference will not occur in a particular installation. If this equipment does cause harmful interference to radio or television which can be determined by reception, turning the equipment off and on, the user is encouraged to try to correct the interference by one or more of the following measures:

- Reorient or relocate the receiving antenna. Increase the separation between the equipment and receiver.
- Connect the equipment into an outlet with a circuit different from that to which the receiver is connected.
- Consult the dealer or an experienced radio/TV technician for help.

RF Exposure Information
This equipment complies with FCC radiation exposure limits set forth for an uncontrolled environment. This equipment should be installed and operated with minimum distance 20cm between the radiator and your body.

FCC WARNING:

To assure continued compliance, follow the attached installation instructions and use only shielded cables when connecting to other devices. Modifications not authorized by the manufacturer may void user`s authority to operate this device.

WARNING:
TO REDUCE THE RISK OF FIRE OR ELECTRIC SHOCK, DO NOT EXPOSE THIS PRODUCT TO RAIN OR MOISTURE.

WARNING:
TO REDUCE THE RISK OF FIRE OR ELECTRIC SHOCK, AND ANNOYING INTERFERENCE, USE THE RECOMMENDED ACCESSORIES ONLY.

Before using the unit, be sure to read all operating instructions carefully. Please note that these are general precautions and may not pertain to your unit.

1) Read these instructions
All the safety and operating instructions should be read before the product is operated.

2) Keep these instructions
The safety and operating instructions should be retained for future reference.

3) Heed all warnings
All warnings on the product and in the operating instructions should be adhered to.

4) Follow all instructions
All operating and use instructions should be followed.

5) Do not use this apparatus near water
Do not use this product near water and moisture, for example: near a bathtub, washbowl, kitchen sink or laundry tub; in a wet basement; or near a swimming pool.

6) Clean only with dry cloth
Unplug this product from the wall outlet before cleaning. Do not use liquid cleaners or aerosol cleaners. Use a dry cloth for cleaning.

7) Do not block any ventilation openings. Install in accordance with the manufacturer's instructions
Slots and openings in the cabinet and in the back or bottom are provided for ventilation, to ensure reliable operation of the product and to protect it from overheating. These openings must not be blocked or covered. The openings should never be blocked by placing the product on a bed, sofa, rug or other similar surface. This product should never be placed near or over a radiator or heat source. This product should not be placed in a built-in installation such as a bookcase or rack unless proper ventilation is provided or the manufacturer's instructions have been adhered to.

8) Do not install near any heat sources such as radiators, heat registers, stoves, or other apparatus(including amplifiers) that produce heat.

9) Do not defeat the safety purpose of the polarized or grounding-type plug. A polarized plug has two blades with one wider than other. A grounding type plug has two blades and a third grounding prong. The wide blade or the third prong are provided for your safety. If the provided plug does not fit into your outlet, consult an electrician for replacement of the obsolete outlet.

10) Protect the power cord from being walked on or pinched particularly at plugs, convenience receptacles, and the point where they exit from the apparatus.

11) Only use attachments/accessories specified by the manufacturer.

12) Unplug this apparatus during lightning storms or when unused for long periods of time
To protect your product from a lightning storm, or when it is left unattended and unused for long periods of time, unplug it from the wall outlet and disconnect the antenna or cable system.This will prevent damage to the product due to lightning and power-line surges.

13) Refer all servicing to qualified service personnel. Servicing is required when the apparatus has been damaged in any way, such as power-supply cord or plug is damaged, liquid has been spilled or objects have fallen into the apparatus, the apparatus has been exposed to rain or moisture does not operate normally, or has been dropped.

14) Power source
This product should be operated only from the type of power source indicated on the marking label. If you are not sure of the type of power supply to your home, consult your appliance dealer or local power company. For products intended to operate from battery power, or other source, refer to the operation instructions.

15) Service
Do not attempt to service this product yourself as opening or removing covers may expose you to dangerous voltage or other hazards. Refer all servicing to qualified service personnel.

WARNING:
To reduce the risk of fire or electric shock, do not expose this apparatus to rain or moisture. The apparatus shall not be exposed to dripping or splashing and that objects filled with liquids, such as vases shall not be placed on apparatus.

ABOUT DISCS

The region number for this DVD Player is: 1
See the following page for information regarding region numbers.

PLAYABLE DISCS:
The following discs can be played back on this DVD player:

DISC TYPES:
DVD
Data on most DVDs is divided into sections called titles and then into subsections called chapters, each of which is given a title or chapter number. Some features of this DVD player will not operate with some DVD discs as they are preset. If a function you selected does not run as desired , refer to the manual accompanying the DVD disc.

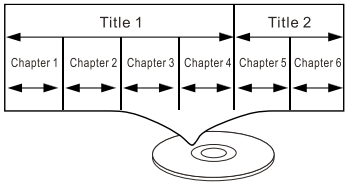

AUDIO CD
Data on an audio CD is divided into sections called tracks , each of which is given a track number.

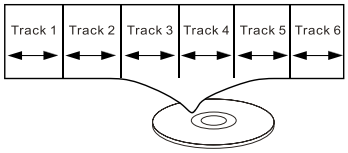

IMPORTANT:
It is important that you read the manual that accompanies the DVD disc , as there are features that are on the DVD player that cannot be used with certain DVDs .
There are also extra features on the DVD disc that are different for each DVD disc, so they are not explained in this owner's manual.

This player conforms to the NTSC and PAL color systems . However , if you are in the USA , Canada or Mexico,leave this setting on NTSC . If incorrectly set to PAL ,the TV picture may roll vertically. In this case , set the TV system to NTSC.

Notes on Copyright:
It is forbidden by law to copy, broadcast, show, broadcast on cable, play in public and rent copyrighted material without permission. DVD video discs are copy protected, and any recordings made from these discs will be distorted. This product incorporates copyright protection technology that is protected by method claims of certain U.S. Patents and other intellectual property rights owned by Macrovision Corporation, and is intended for home and other limited viewing uses only, unless otherwise authorized by Macrovision Corporation. Reverse engineering or disassembly is prohibited.

Region Management Information:
This DVD Player is designed and manufactured to respond to the Region Management Information that is recorded on a DVD disc. If the Region number described on the DVD disc does not correspond to the Region number of this DVD player, this DVD player cannot play that disc. You may not be able to play back some DVD video discs on this player if they were purchased from outside your geographic area or made for business purposes. When you try to play back an unauthorized disc, Wrong Region appears on the TV screen.

PLACING & MOUNTING

1. Placing

When placing the media center in any type of enclosed space, be sure to allow space around it for ventilation.

If placing in a tight space without ventilation, heat generated from the unit could produce a potential heat hazard.

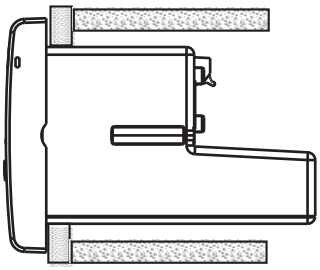

2. Mounting

Rough opening cut-out

(WMS-DVDZ3).....10 5/8(Width) x 3 3/4(Height) x 5 5/8(Depth) in
(WMS-DVDZ3-SB).....28 3/4(Width) x 3 3/4(Height) x 5 5/8(Depth) in

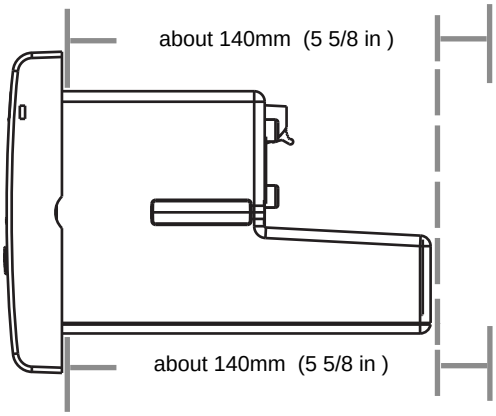

GENERAL VIEW

Front View

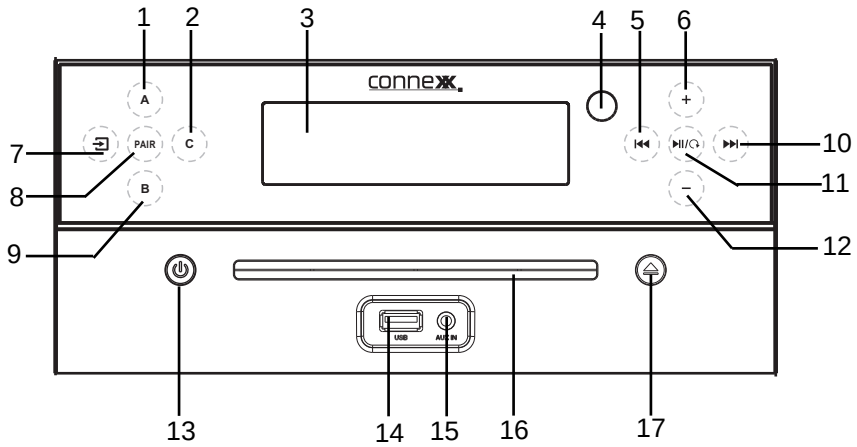

1. Zone A touch button
2. Zone C touch button
3. Display
4. Remote sensor
5. Previous touch button
6. Volume up touch button
7. Source touch button
8. PAIR touch button
9. Zone B touch button
10. Next touch button
11. Play/pause, Station recall touch button
12. Volume down touch button
13. Power on/off button
14. USB port
15. AUX IN jack
16. Disc compartment
17. Disc eject button

Display

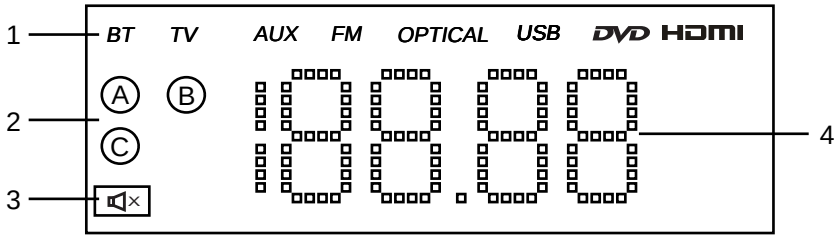

1. Mode
2. Audio zone
3. Mute
4. FM frequency

Rear View

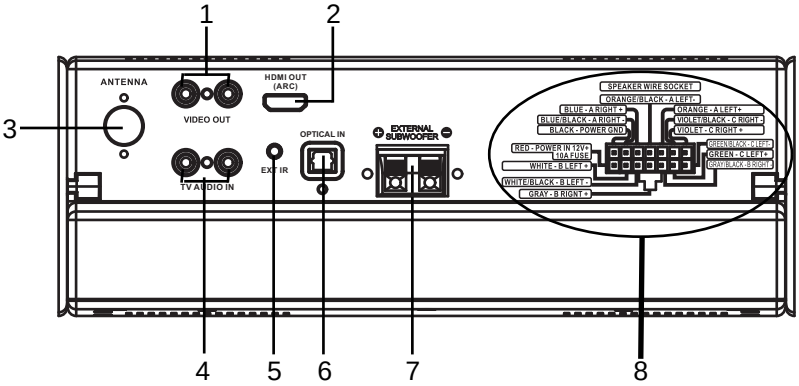

1. VIDEO OUT jacks
2. HDMI OUT (ARC) jack
3. ANTENNA jack
4. TV AUDIO IN jacks
5. EXT IR jack
6. OPTICAL IN jack
7. EXTERNAL SUBWOOFER connector
8. Power/speaker wire harness socket

SPEAKER/POWER WIRE SOCKET DIAGRAM

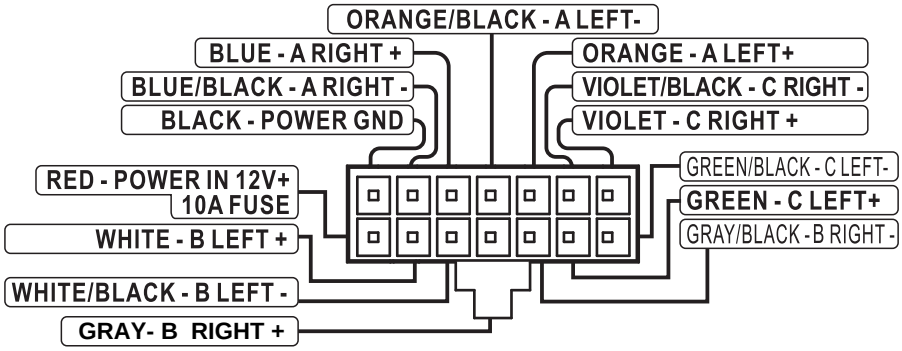

SPEAKER (6X4-ohms) WIRING COLOR CODE GUIDE

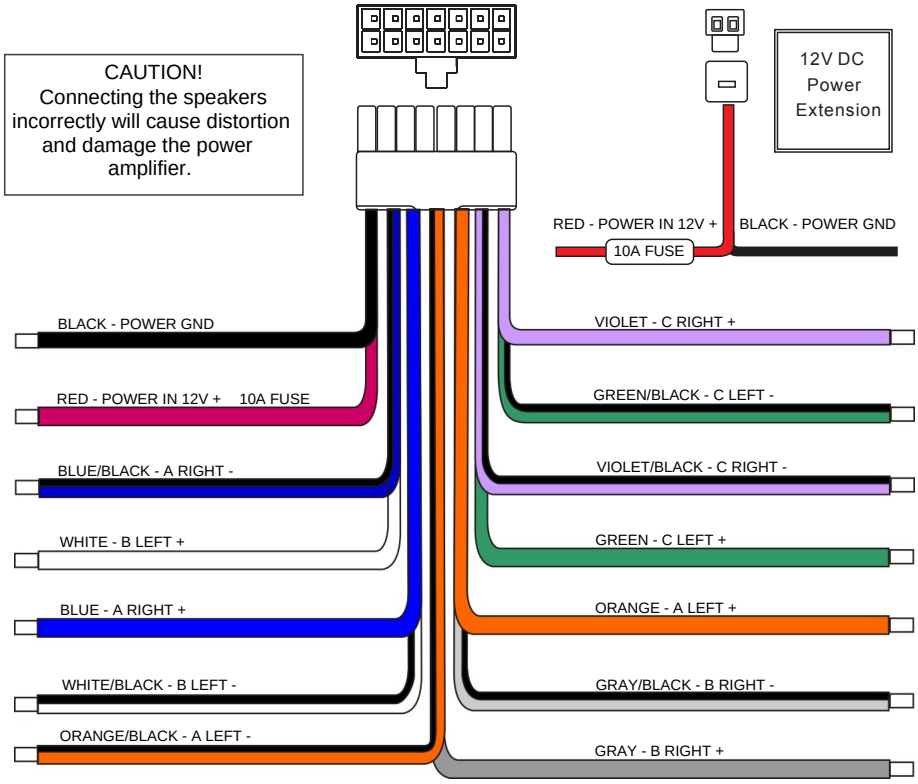

REMOTE CONTROL

1. Power on/off button
2. PAIR button
3. REP. (repeat) button
4. Zone A button
5. Zone B button
6. Source button
7. Fast forward/Up button
8. Previous/Left button
9. Fast backward/Down button
10. SETUP button
11. Stop button
12. MENU button
13. GOTO button
14. TITLE button
15. Numeric button
16. Disc open/close button
17. TUNE + button
18. TUNE - button
19. ARC (audio return channel) button
20. Zone C button
21. Mute button
22. Next/Right button
23. Exit button
24. VOL+,VOL- button
25. PROG (program) button

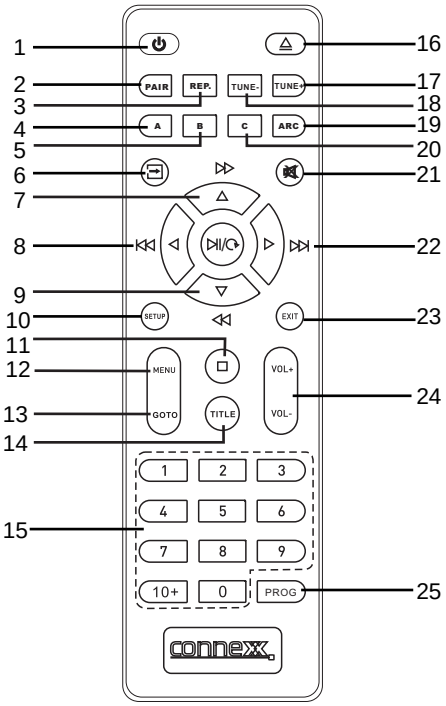

Optional External Remote Sensor

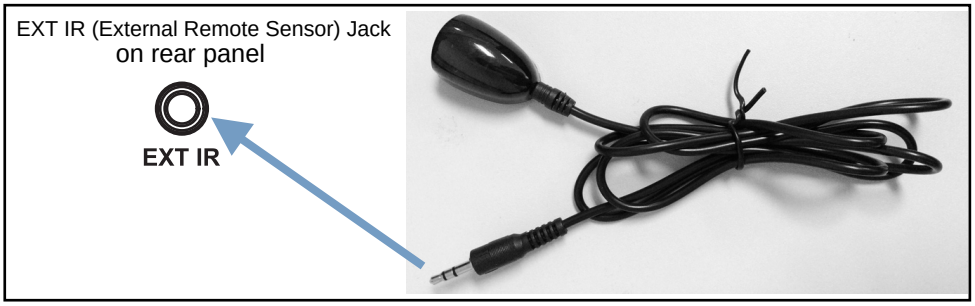

If using the external optional remote sensor, insert the plug into the EXT IR Jack as the arrowhead shown on above picture. This will allow the remote control to work in another zone if desired.

BATTERY INSTALLATION--- REMOTE CONTROL

Battery Installation

1.Slide and lift the battery door (Figure 1).

2.Install 2 (two) AAA size batteries into the battery compartment as indicated by the polarity markings (Figure 2).

3.Replace the battery door (Figure 3).

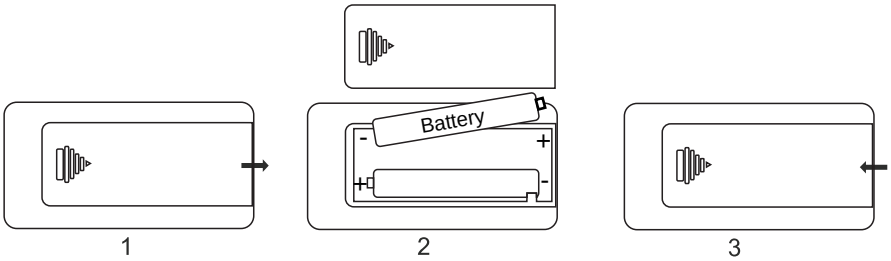

Battery Precaution

Follow these precautions when using a battery in this device:

1. Use only the size and type of battery specified.
2. Be sure to follow the correct polarity when installing the battery as indicated in the battery compartment. A reversed battery may cause damage to the device.
3. Do not mix different types of batteries together (e.g. Alkaline and Carbon-zinc) or old batteries with fresh ones.
4. If the batteries in the device are consumed or the device is not to be used for a long period of time, remove the batteries to prevent damage or injury from possible battery leakage.
5. Do not try to recharge the battery not intended to be recharged; it can overheat and rupture. (Follow battery manufacturer's instructions).
6. The batteries shall not be exposed to excessive heat such as sunshine, fire or the like.
7. Clean the battery contacts and also those of the device prior to battery installation.

Remote Control Effective Range

Notes:

- When there is an obstacle between the unit and the remote control, the remote control may not operate properly.
- When direct sunlight, an incandescent lamp, fluorescent lamp or any other strong light shines on the remote sensor of the unit, the operation of remote control may be unstable.

GENERAL OPERATIONS

1. Press the ⏻ button on the unit or remote control to power on the unit from standby mode.

2. Press the button on remote control or touch the button on unit repeatedly to switch to desired mode as listed:

   BT TV AUX FM OPTICAL USB DVD HDMI

   NOTE: USB mode will be selected when the USB device is inserted.

3. During Playback:

~ Press the VOL+/VOL- buttons on the remote control or touch the + or - button on the unit to adjust volume level as desired.

~ Press button on the remote control to mute the sound on all active zones.
Press again to resume.

~ Press A, B or C button on the remote control or touch A,B or C button on the unit to switch ON or OFF the corresponding ZONE A/B/C speakers.

4. When finished listening, press the ⏻ button on the unit or remote control to power off the unit.

5. If the unit is not used for long period of time, please disconnect power.

LISTEN TO FM RADIO

BEFORE OPERATION

Insert the Antenna into the ANTENNA Jack on rear panel as illustrated as below.

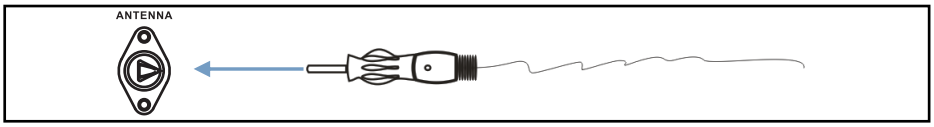

SEARCHING STATION

1. Power ON the unit.
2. Press the button on remote control or touch the button on unit repeatedly to switch to FM mode, the FM frequency will appear on the display.
3. Touch and hold the ⏮ or ⏭ button on front of the unit or press and hold the TUNE- or TUNE + button on remote control, then release the button to search the previous or next available FM station automatically, when a station searched, it will playback automatically.
4. Touch the ⏮ or ⏭ button on front of the unit or press the TUNE- or TUNE+ button on remote control to fine tune.

STATIONS STORAGE THROUGH THE TOUCH BUTTON ON UNIT

When a station searched, touch and hold the button to display the storage location (such as Pxx, the xx stands for 01-10), then press button to change and select the desired storage location, touch and hold the button to confirm and complete station storage. A total of 10 stations can be stored into the unit's memory.

STATIONS STORAGE THROUGH THE BUTTON ON REMOTE CONTROL

When a station searched, press and hold the button to display the storage location (such as Pxx, the xx stands for 01-10), then press the button to change and select the desired storage location, press and hold the button to confirm and complete station storage. A total of 10 stations can be stored into the unit's memory.

PRESET RECALL

Touch the button on the unit or press the on remote control repeatedly to select the preset stored station and playback.

FM Antenna

The antenna wire on the rear of the unit is for radio reception. If reception is weak, unwind and extend the wire or relocate the unit to improve the radio reception.

BLUETOOTH PAIRING AND PLAYBACK

1. Power ON the unit.

2. Press the button on remote control or touch the button on unit repeatedly until "BT" appears on display and blinks, now it is in BT pairing mode.

3. Activate the external BT Device and enter BT searching mode. Start pairing as the screen instructions on the external BT Player.
For details pairing procedures, please refer to the user's manual of your BT Device.

4. When the external BT Device searched the unit, **WMSDVDZ3'** will appear on the display of the external BT Device, select it and make connection.

5. After successfully paired and connected, the "BT" on display will stay lit.

6. If you want to connect with other BT device, press the PAIR button on remote control or touch the PAIR button on the unit to disconnect the current pairing and connection, then try to pair and connect with other BT device.

During playback:
Press the VOL+/VOL- buttons on the remote control or touch the + or - button on the unit to adjust volume level as desired.

NOTE:
After pairing for the first time, the unit will remember and automatically pair with the last connected device when the bluetooth of the device and the unit are activated within range.

ADDING OPTIONAL EXTERNAL SUBWOOFER

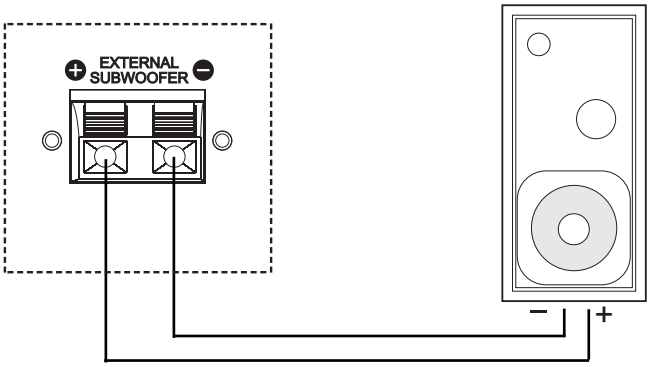

NOTE: Before connecting, please disconnect power.

1. Connect one end of subwoofer connection cable (not supplied) to the "+" Jack on the rear of the unit as the figure above.
2. Connect the other end to the "-" Jack on the rear of the unit as the figure above.
3. Power ON the unit.
4. Play the music as usual and set the desired volume.

CONNECT USING OPTICAL

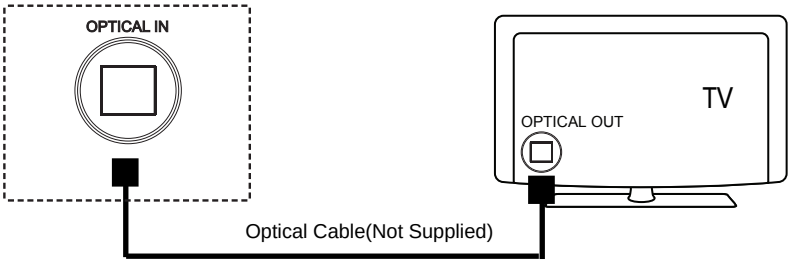

NOTE: Before connecting, please disconnect power.

1. Connect one end of optical connection cable (not supplied) to the OPTICAL IN jack on the rear of the unit as pictured above.

2. Connect the other end to the OPTICAL OUT jack on TV etc.

3. Power ON the unit.

4. Press the button on remote control or touch the button on unit repeatedly until "OPTICAL" appears on display.

5. Set the desired volume.

CONNECT TO TV (ANALOG)

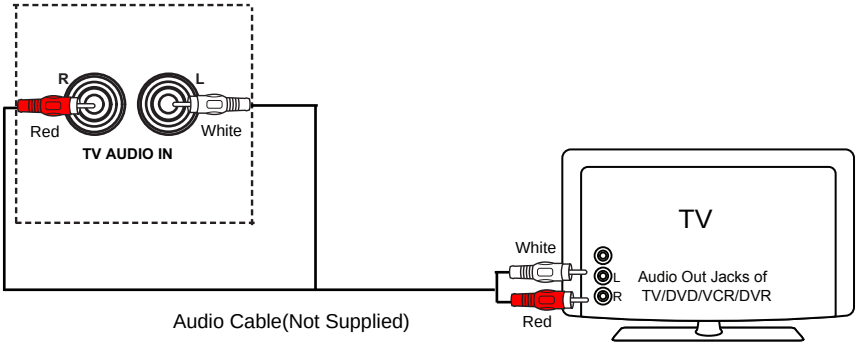

NOTE: Before connecting, please disconnect power.

1. Connect as the figure above.

2. Power ON the unit.

3. Press the button on remote control or touch the button on unit repeatedly until " TV " appears on display. TV audio is selected and will play through the unit.

4. Play the audio or video as usual and set the desired volume.

CONNECT USING HDMI

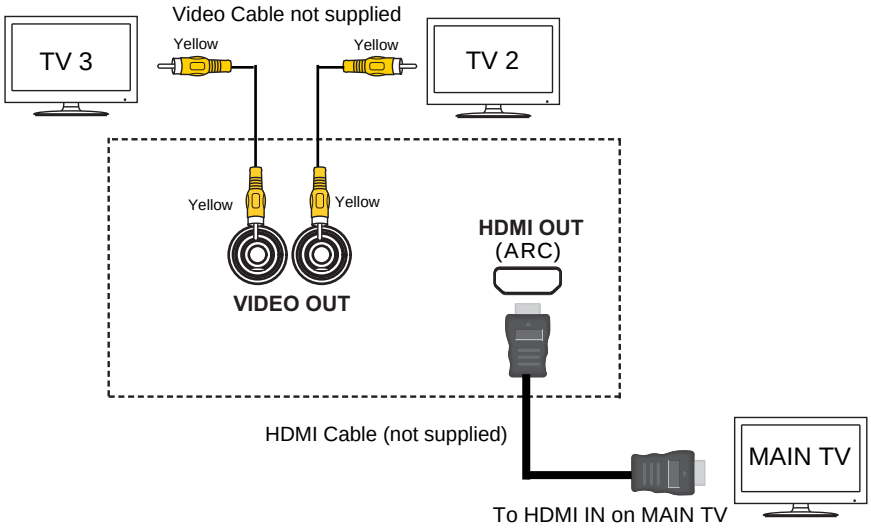

NOTE: Before connecting, please disconnect power.

1. Connect as the figure above.(TV 2, TV 3 are optional to connect)
2. Power ON the unit.
3. Press the button on remote control or touch the button on unit repeatedly until " DVD HDMI " appears on display.
4. Play the audio or video through DVD player as usual and set to the desired volume.
5. When playback through the MAIN TV by HDMI, only " HDMI " will appear on display, press the ARC (Audio Return Channel) button on remote control to transmit the audio from the MAIN TV to the unit and play through the unit, "ArC" will appear on display. Press the ARC button again to resume normal playback.

NOTE:

- The TV must have the ARC capability, and HDMI connected to HDMI ARC jack on capable TV.
- No matter which mode the unit is in, press the ARC button on remote control to switch back to ARC mode.

AUX IN : LISTEN TO EXTERNAL AUDIO DEVICES

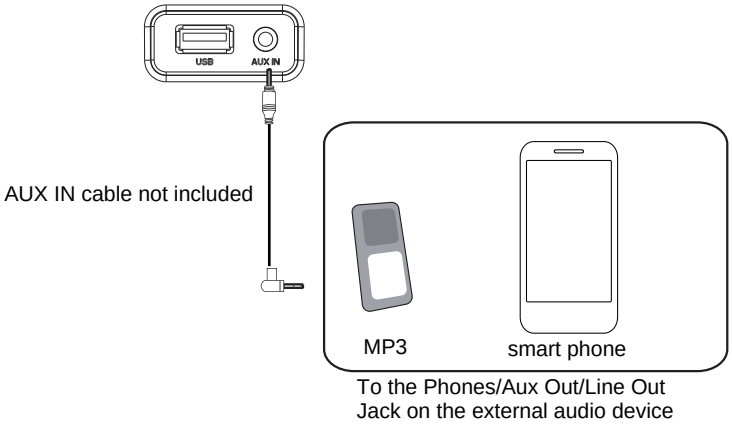

1. Connect one end of audio connection cable to the AUX IN jack on the front of the unit as illustrated above.
2. Connect the other end to the Audio out/Line out/Phone jack on the external player (such as iPod, iPhone, iPad, MP3 player, smart phone... etc.)
3. Power ON the unit.
4. Press the button on remote control or touch the button on unit repeatedly until " AUX " appears on display.
5. Play the music in the external player as usual and set the desired volume.

USB : LISTEN TO EXTERNAL AUDIO DEVICES

1. Insert the USB device.
2. Power ON the unit.
3. Press the button on remote control or touch the button on unit repeatedly until " USB " appears on display.
4. Play the music in the external player as usual and set the desired volume.

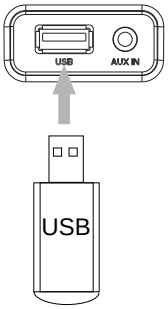

NOTE:
The USB port can also be used for charging the external device.

DVD: PLAYBACK THROUGH DVD PLAYER

1. Power ON the unit.

2. Press the button on remote control or touch the button on unit repeatedly until " DVD " appears on display, or press the button on the unit or remote control directly to enter DVD mode.

3. "OPEN" will display, insert the disc into the disc compartment with label side facing up, "LOAD" will appears on display, the unit will begin playback automatically after a few seconds.

3. During playback:

~ Press the ▶▶ or ◀◀ Button on the Remote Control repeatedly to fast search for a specific section forward/backward. Press the Play ▶II Button to resume normal playback.

~ Press the ▶▶I or I◀◀ Buttons repeatedly to skip to specific chapter or track.

~ Press the 0-10+ Button to select the certain chapter or track to playback.

~ Press the TITLE Button on remote control to enter title playback.

~ Press the MENU Button on remote control to enter menu.

~ Press the ▶II Button to pause, press the ▶II Button again to resume normal playback.

~ Press the STOP ■ Button to pre-stop, the player will remember the point where disc was stopped, When press the Play/Pause ▶II Button again, playback will start from this point.
Press the STOP ■ Button twice to stop completely, press the Play/Pause ▶II Button to start playback from beginning,

4. Repeat playback:

DVD Disc repeat playback:

- Press the REP. Button once, “REP: [CHAPTER]” will appear on the connected TV. The current chapter will playback repeatedly and continuously.
- Press the REP. Button twice; “REP: [TITLE]” will appear on connected TV. The current Title will playback repeatedly and continuously.
- Press the REP. Button the three times; “REP: [REP ALL]” will appear on connected TV. All files on the current disc will playback repeatedly and continuously.
- To cancel repeat function, press the REP. Button repeatedly until “REP: [OFF]” appears.

CD disc repeat playback:

- Press the REP. Button once; “REP: [REP 1]” will appear on connected TV. The current track will playback repeatedly and continuously.
- Press the REPEAT Button twice; “REP: [REP ALL]” will appear on connected TV. All files on the current disc will playback repeatedly and continuously.
- To cancel repeat function, press the REP. Button repeatedly until “REP: [OFF]” appears.

5. GOTO:

- In DVD playback mode, press the GOTO Button once.
  The TT (Title), CH (Chapter) and establish time selection menu will pop up on the screen. Using the direction & numeric Buttons to select the desired title, chapter or time then press the ▶II Button to start to play from the selected Title, Chapter or established time.
- In CD playback mode, press the GOTO Button once. The TRK (Track) and establish time (for selected track) selection menu will pop up on the screen. Using the direction & numeric Buttons to select the track or establish time (for selected track) then press the ▶II Button to start to play from the selected track or established time.

6. DVD/CD Program playback:

- During playback, press the PROG (Program) Button, the follows menu will appear on the connected TV.

T	C	T	C	T	C	T	C
1	01:03	5	--:--	9	--:--	13	--:--
2	--:--	6	--:--	10	--:--	14	--:--
3	--:--	7	--:--	11	--:--	15	--:--
4	--:--	8	--:--	12	--:--	16	--:--

PROGRAM PLAY CLEAR

1	----	5	----	9	----	13	----
2	----	6	----	10	----	14	----
3	----	7	----	11	----	15	----
4	----	8	----	12	----	16	----

PROGRAM PLAY CLEAR

- Using the Direction, Numeric Buttons to select and set the desired T (Title); C (Charter) or track you want to program. Repeat the same procedures until all the specific files were programmed.
  (During setting, using the Direction Buttons to selected and highlighted the "CLEAR" Button on the screen then press the ▶II Button to erase the settings.)
- Using the Direction Button to selected and highlighted the "PLAY" Button on the screen then press the ▶II Button to start program playback.

SYSTEM SETUP

GENERAL SETUP

Press the SETUP Button once. The SYSTEM SETUP menu will appear on the connected TV.

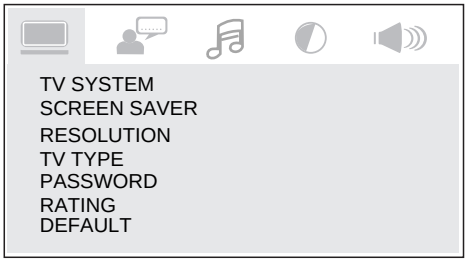

Press the Direction ► Buttons to enter to the menu then press the Direction ▲ or ▼ Buttons to select and highlight the function you need to set or reset:

1. If TV SYSTEM is selected, using the Direction and ▶II Buttons to set to PAL, AUTO or NTSC. (Note: The TV system in US, Canada and Mexico is NTSC).
2. If SCREEN SAVER is selected, using the Direction and ▶II Buttons to set it to On or Off. If set to On, the screen saver will come on when the unit stops or the image is paused for approximately five (5) minutes.
3. If RESOLUTION is selected, using the Direction and ▶II Buttons to set the HDMI relution.
4. If TV TYPE is selected, using the Direction and ▶II Buttons to set the aspect ratio to match the playing movie.

5. If PASSWORD is selected:

- To release the lock and set/reset the rating level:

  When PASSWORD is selected and highlighted, press the ▶II Button to enter. " ---- " on the screen will be highlighted, enter the default password "0000" by press the numeric buttons then press the ▶II Button to unlock. "---- " will appearing. Then press the Direction ▼ Button to highlight RATING on the screen to set or reset the rating level.

- To set or reset new password and rating level:

  When PASSWORD is selected and highlighted, press the ▶II Button to enter. " ---- " on the screen will be highlighted, enter the default password "0000" by press the numeric buttons then press the ▶II Button to unlock. "---- " will appearing.
  Using the direction ► Button to highlight the " ---- "on screen again. Enter the new four (4) digit password by press the numeric buttons then press the ▶II Button to save the settings and exit.
  Press the Direction ▼ Button to highlight RATING on the screen to set or reset the rating level.

6. If RATING is selected after unlock, using the Direction and ▶II Buttons to change the rating level as follows.

- Press the ▲ or ▼ Buttons to select the desired level as the list below.
- Press the ▶II Button to confirm the selection.

~ Rate levels:

1. KID SAFE:	Kid safe
2. G:	All ages
3. PG:	Parental Guidance
4. PG 13:	Parental Guidance less than 13 years old
5. PG-R:	Under 17 years old, Parental Guidance suggested
6. R:	Under 17 years old, Parental Guidance strongly
7. NC-17:	17 years old or above
8. Adult:	Adult only

7. If DEFAULT is selected, using the Direction and ▶II Buttons to reset to factory settings or press the SETUP or Exit Button on remote control to exit without changes.

LANGUAGE SETUP

1. If OSD LANGUAGE (On Screen Display Language) is selected, using the Direction and ▶II Buttons to set the priority of the available language. (Function depends on the recording of the disc.)
2. If AUDIO LANG (Audio Language) is selected, using the Direction and ▶II Buttons to set the priority of the available language.
3. If SUBTITLE LANG (Subtitle Language) is selected, using the Direction and ▶II Buttons to set the priority of the available language or set it off.
4. If MENU LANG (Menu Language) is selected, using the Direction and ▶II Buttons to set the priority of the available language of the on screen menu.

HDMI AUDIO SETUP

If HDMI AUDIO is selected, using the Direction and ▶II Buttons to set it to AUTO or PCM format.

VIDEO SETUP

Using the Direction and ▶II buttons to set or reset the Brightness; Contrast; Hue; Saturation or Sharpness of the video output picture as desired.

AUDIO SETUP

If DOWNMIX is selected, using the Direction and ▶II Buttons to set it to LT/RT or Stereo.

~ If set to LT/RT, the rear left or rear right channels in Dolby 5.1 recording DVD disc will play on both Left and Right Speakers.

~ If set to Stereo, the rear left channel will play on Left Speaker; the rear right channel will play on Right Speaker.

Note: Function depends on the recording of disc.

DISC MAINTENANCE

Caring for Discs

Treat the disc carefully. Handle the disc only by its edges.
Never allow your fingers to contact with the shiny, unprinted side of the disc.

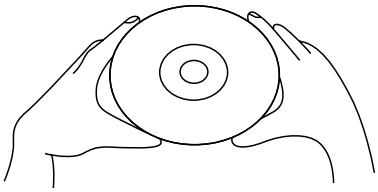

- Do not attach adhesive tape, stickers, etc. to the disc label.
- Clean the disc periodically with a soft, lint-free,dry cloth, Never use detergents or abrasive cleaners to clean the disc. If necessary, use a CD cleaning kit.
- If a disc skips or gets stuck on a section of the disc, it is probably dirty or damaged(scratched).
- When cleaning the disc, wipe in straight lines from the center of the disc to the outer edge of the disc. Never wipe in circular motions.

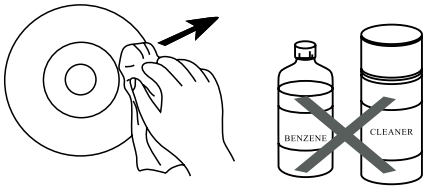

- Discs should be stored in their cases after each use to avoid damage.
- Do not expose discs to direct sunlight, high temperatures or dust, etc. Prolonged exposure or extreme temperatures can warp the disc.
- Do not stick or write anything on either side of the disc. Sharp writing Instruments, or the ink, may damage the surface.

Cleaning the Unit

- To prevent fire or shock hazard, disconnect your unit from the AC power source when cleaning.
- The finish on your unit may be cleaned with a dust cloth and cared for as other furniture. Use caution when cleaning and wiping the plastic parts.
- Mild soap and a damp cloth may be used on the front panel.

TROUBLESHOOTING GUIDE

Check the following guide before requesting service		
SYMPTOM	**POSSIBLE CAUSE**	**POSSIBLE SOULTION**
No power	power cable not connected or blown fuse	~Check fuse ~Check 12V connection
No sound	Volume in minimum position	Raise volume level by pressing the VOL (Volume) + button
	The connected device is not in playback mode	Play the music/movie in the connected device as usual and make sure the volume level of it is in high level
	Input source incorrect	Press the button repeatedly to set the input source to the desired mode
Sound distortion	Bass level of the connected device too high	Reduce the bass level of the connected device
	Volume level too high	Reduce the volume level by pressing the VOL (Volume) - button
Remote not working	The batteries are consumed	Replace with new batteries
Bluetooth reception failure	The external device is too far from the unit	Move the external BT device closer to the unit
	Have not paired	Pair both units

SPECIFICATIONS

Operation Voltage.....DC10V-14V

Power Supply Requirement.....DC 12 Volts, Negative Ground

Overall Dimension (WMS-DVDZ3-SB).....741.2(W)x122.0(H)x161.0(D)mm

Overall Dimension (WMS-DVDZ3).....312.0(W)x122.0(H)x161.0(D)mm

Max Power Consumption.....90W

Video In/Out Level.....1 Vp-p/Load impedance:75 ohm

Radio Coverage .....FM 87.5 -108.0 MHz

Bluetooth Effective Range.....Up to 30 feet
(Measured in open area. Wall and structures may affect the effective range.)

Remote Effective Range.....Up to 15 feet

Specifications subject to change without notice.

FCC WARNINGS:

The device complies with Part 15 of the FCC rules. Operation is subject to the following two conditions.

(1) The device may cause harmful interference. and
(2) This device must accept any interference received, including the interference that may cause undesired operation.

Changes or modifications not expressly approved by the party responsible for compliance could void the user's authority to operate the equipment.

NOTE:

THE MANUFACTURER IS NOT RESPONSIBLE FOR ANY RADIO OR TV INTERFERENCE CAUSED BY UNAUTHORIZED MODIFICATIONS TO THIS EQUIPMENT. SUCH MODIFICATIONS COULD VOID THE USER'S AUTHORITY TO OPERATE.

RIVERPARK

www.riverparkinc.com

© 2017 RIVERPARK Inc.

V. 082217