Circuit Diagram

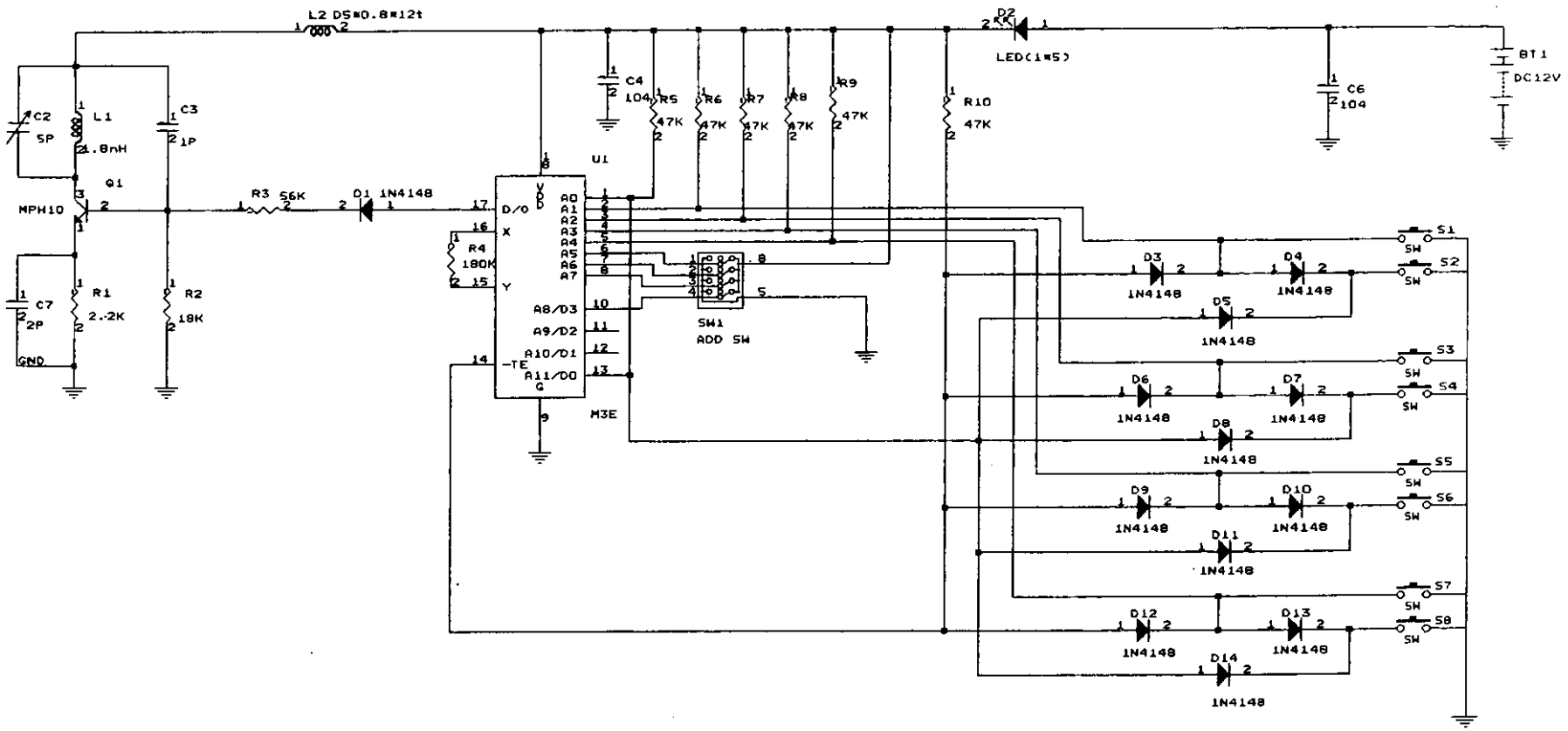

MING JONG ELECTRIC IND. CO., LTD.
8F,NO.1,LANE16,SZE CHUAN ROAD,SEC.2
PANCHIAO CITY TAIPEI HSIEN,TAIWAN R.O.C

Title: Drawing By Kuo-Shu Chen

Size: B | Document Number: D7/11/1998 | REV: 00

Date: May 20, 1999 | Sheet of