APPENDIX H

: USER'S MANUAL

USERS MANUAL

TFT LCD MONITOR

B17SM

ACCUVISION 720TF

IMRI

FCC Compliance Statement

NOTE:

This equipment has been tested and found to comply with the limits for a Class B digital device, pursuant to Part 15 of FCC Rules. These limits are designed to provide reasonable protection against harmful interference in a residential installation. This equipment generates, uses, and ca radiate radio frequency energy and, of not installed and used in accordance with the instructions, may cause harmful interference to radio communications. However, there is no guarantee that interference will not occur in a particular installation. If this equipment does cause harmful interference to radio or television reception, which can be determined by turning the equipment off and on, the user is encouraged to try to correct the interference by one or more of the following measures:

- Reorient or relocate the receiving antenna.
- Increase the separation between the equipment and receiver
- Connect the equipment into an outlet on a circuit different from that to which the receiver is connected.
- Consult the dealer or an experienced radio/television technician for help.

Notice 1:

The changes or modifications not expressly approved by the party responsible for compliance could void the user's authority to operate the equipment.

Notice 2:

Shielded interface cables, if any, must be used in order to comply with the emission limits.

DOC CLASS B NOTICE

This digital apparatus does not exceed Class limits for radio noise emission for a digital apparatus as set out in the Radio interference Regulations of the Canadian Department of Communications.

● WARNING

WARNING:
To reduce the risk of electric shock do not remove cover (or rear).
No user serviceable parts inside. Refer servicing to qualified service personnel.

The lightning flash with arrowhead symbol, within an equilateral triangle, is intended to alert the user to the presence of uninsulated "dangerous voltage" within the product enclosure that may be of sufficient magnitude to constitute a risk of electric shock to persons.

The exclamation point within an equilateral triangle is intended to alert the user to the presence of important operating and maintenance (servicing) instructions in the literature accompanying the appliance.

WARNING:
To prevent fire or shock hazard, do not expose the set to rain or moisture. Do not rub or strike the Active Matrix LCD with anything hard as this may scratch, mar, or damage the Active Matrix LCD permanently.

CAUTION:
Do not attempt to modify this product in any way without written authorization from a source of supply. Unauthorized modification could void the user's authority to operate this product.

Power
This set operates on a DC supply provided by the AC-DC adaptor, the voltage is as indicated on the label on the rear cover. Use only the AC-DC adaptor supplied with the set and never applies an AC mains to the set directly. The AC-DC adaptor operates on an AC mains supply, the voltage is as indicated on the label of the AC-DC adaptor.

a. Connect the DC plug of the AC-DC adaptor to the power socket of the set.
b. Connect the AC-DC adaptor and it's power cord.
c. Connect the power cord to an AC mains.

In the event of thunderstorms or power cuts, please pull out the mains plug of the AC-DC adaptor and the aerial plug. Do not allow anything to rest upon or roll over the power cord, and do not place the set where the power cord is subject to damage.

Service
Never remove the rear cover of the set, this can expose you to high voltage and other hazards. If the set does not operate properly, unplug it and call your dealer. Antenna Connect the antenna cable to the connection marked ANTENNA.(on the rear). For the best reception, use an outdoor antenna.

Location

Position your set so that no bright light or sunlight will shine directly on the screen. Do not expose the set to vibration, moisture, dust or heat. Also ensure that the set is placed in a position that allows a free flow of air. Do not cover the ventilation openings on the rear cover.

You can install the set on a wall or place it on a table-top or similar flat surface.

Mounted the set securely to eliminate the risk of injury from the set falling. Contact your Zenith dealer to purchase the optional ceiling mount.

Cleaning

Unplug the set before cleaning the face of the LCD Screen. Dust the set by wiping the screen and the cabinet with a soft, clean cloth.

If the screen requires additional cleaning, use a clean, damp cloth. Do not use liquid cleaners or aerosol cleaners.

Table of Contents

1) Safety instructions ---------- 1-2

2) Table of contents ---------- 3

3) Specifications
(1) Features ---------- 4
(2) Setting up your monitor front / rear ---------- 5

4) Installing your monitor
(1) Basic contents ---------- 6
(2) Installing your monitor ---------- 6
(3) Assembling your monitor
① Assembling the Stand & Base ---------- 7
② Connecting the Power & Signal cable ---------- 8

5) Adjusting your monitor
(1) PC
① Adjusting Brightness ---------- 9
② Adjusting Contrast ---------- 9
③ Adjusting Phase ---------- 10
④ Adjusting Frequency ---------- 10
⑤ Adjusting Screen Position(H/V) ---------- 10
⑥ Adjusting Sharpness ---------- 10

(2) OSD
① Menu Position Adjustments ---------- 11
② OSD Timeout Adjustments ---------- 11
③ Language Adjustments ---------- 12

(3) UTILITY
① Monitor Information ---------- 12
② Resting the Monitor ---------- 13
③ Adjusting the Tone(Transparency) ---------- 13
④ Color Temperature Adjustments ---------- 13

(4) AUTO
① Automatically adjusting your monitor screen ---------- 14

6) Power Saver ---------- 15

7) Miscellaneous
(1) Display Modes ---------- 16
(2) Trouble Shooting ---------- 17
(3) Specifications ---------- 18

◈ Features

Thank you for purchasing our TFT LCD monitor.
Please read our Users Manual first to fully enjoy all the functions of our product. Please do not discard our Users Manual for it will come in handy in future use of this product.

The specific features of our product are as follows;

◐ High definition SMART PANEL
◐ Space saving Slim Type Monitor
◐ Low generation of harmful electro-magnetic pulses, heat and noise
◐ Flexible VESA ARM
◐ Flexible Viewing Angle
◐ Low energy consumption,
◐ Plug & Play

◈ Adjusting your monitor(front)

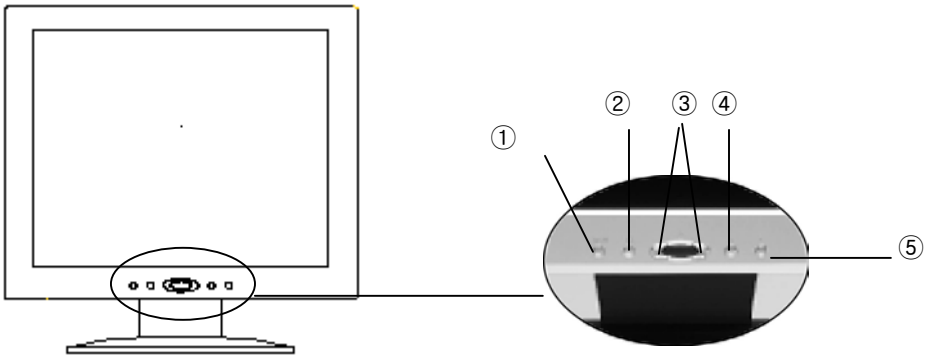

① AUTO: Automatically adjusts your monitor to optimal settings for use in your home.

② EXIT: Exits from the Menus & Sub Menus.

③ ◀ ▶ : Moves from Menu to next Menu / Moves Main menu

④ MENU: Activates Main Menu / Selects and move to next menu

⑤ ⏻ : Turns the monitor ON/OFF.

◈ Adjusting your monitor(rear)

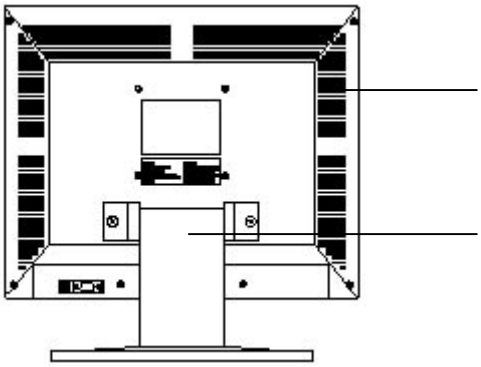

REAR VENT

(WARNING!)

NEVER BLOCK THE REAR VENT.

DETACHABLE PROP

Detach when using the VESA ARM.

◈ Basic Contents

Please make sure the following items are included with your monitor. If any items are missing please contact your nearest dealer or retailer.

- 17” LCD Monitor모니터
- Power adapter
- Users Manual (Warranty)
- Power Cord
- Signal Cable

◈ Installing your monitor

- Please take caution when installing the monitor in high places. Damage to the monitor or injury can be caused if the monitor falls.
- Always install the monitor in a well-vented area. Installing the monitor in a closed-up area or covering the vent can cause fires.
- Never place cups, solvents or heavy items on top of the monitor. And always take care to prevent small metallic objects from falling into the monitor. Such objects in the circuits can cause fire.
- Always install the monitor in dry, dust-free surroundings. Water and dust inside the monitor can cause fires.
- Never place heat-generating objects such as candles or lit cigarettes near the monitor. Heat can cause fires or deform the exterior of the monitor.

- Maintenance & Cleaning

Please unplug the monitor first when cleaning its surface. Clean the surface with soft cloth and never use keton-type materials (e.g., acetone), ethyl alcohol, toluene, ethyl acid, methyl, or chloride or any other kind of solvent. Do not over-damp the cloth as to cause dripping on the surface of the monitor. Rub the surface in one direction to prevent scratches.

◈ Assembling your Monitor

① Assembling the Stand & Base

Please first check that the surrounding appliances have all been turned off, and follow the procedure below.

- First place the monitor so that the LCD screen faces bottom.

  Place a blanket or clean cloth under the screen for protection.

- Insert the Hook on the stand base into the Slot on the monitor. The Latch located in the stand base will 'click' indicating that the Monitor is secure.

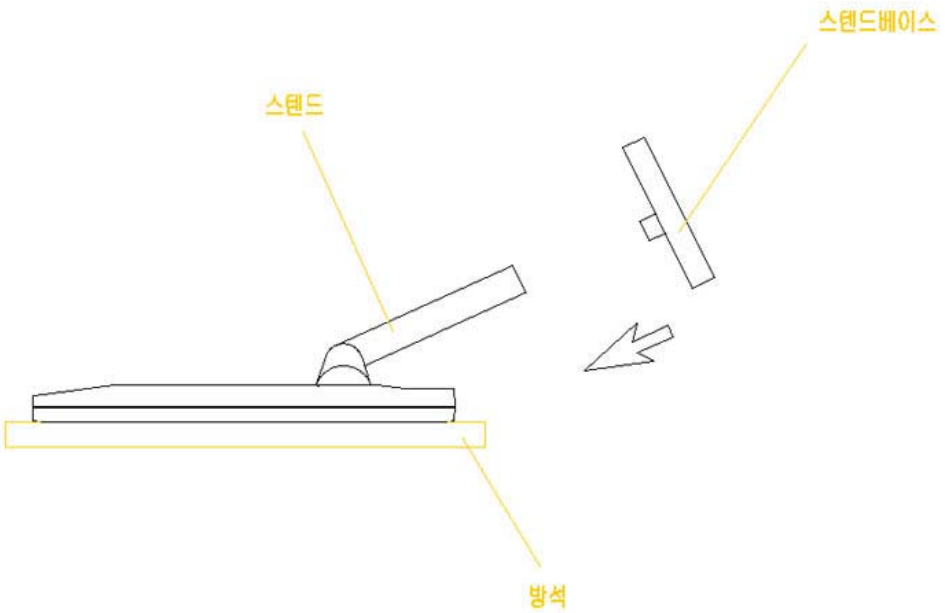

* CAUTION

Assembling the monitor holding the stand base as show in the picture can cause the Head to fall off and cause damage or injury. Please refrain from detaching the stand and the base once assembled if possible.

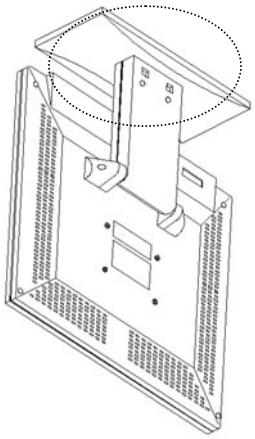

② Connecting the Power & Signal cable

• Connect the power to 110V ~ 220V capacity outlets.
(Free Voltage)

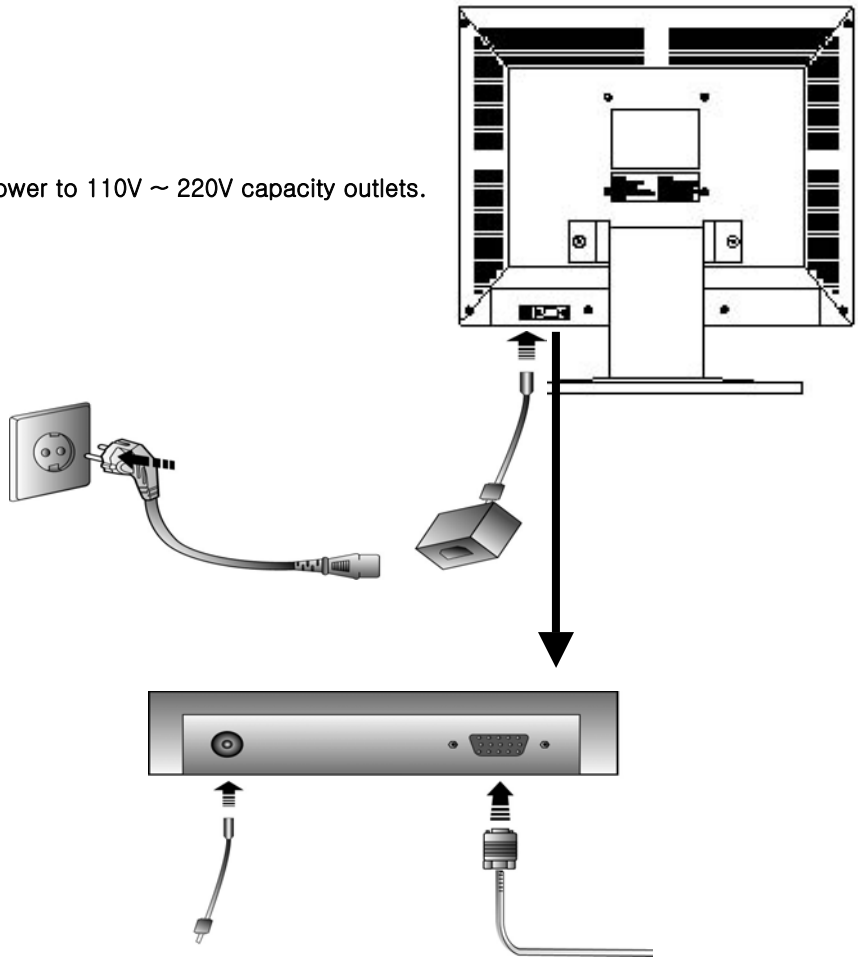

Power

A DC Power source electric adapter operates our product. Never let AC electricity flow into the monitor directly or use a power source other than as indicated on the back of the monitor.

① Connect the DC Power cable to the monitor.

- Connect the DC JACK in the DC adapter to the monitor.
- Connect the AC Power cord to the DC adapter AC terminal.
- Insert the AC cord in the DC adapter into the power outlet.

② Connect the Signal Cable to the Computer.

"No input signal, check connection " shall show up on the screen if the signal cable is not connected properly.

◎ Screen Adjustments

① PC

• BRIGHTNESS ADJUSTMENT

MENU

→ BRIGHTENESS

→ ◀ ▶ADJUST → EXIT

• The Brightness of the LCD Screen is adjustable by using the ◀, ▶ Keys when the Main Menu is not displayed on the screen.

• CONTRAST ADJUSTMENT

MENU

→ CONTRAST

→ ◀ ▶ ADJUST → EXIT

• The Contrast is thus adjustable.

• PHASE ADJUSTMENTS Phase

MENU MENU → PHASE Phase → ◀ ▶ ADJUST → EXIT EXIT

• The Phase is thus adjustable.

• FREQUENCY ADJUSTMENTS Frequency

MENU MENU → FREQUENCY Frequency → ◀ ▶ADJUST → EXIT EXIT

• The Frequency is thus adjustable.

• POSITION ADJUSTMENTS H-Position / V-Position

MENU MENU → H-POSITION H-Position /

V-POSITION V-Position → ◀ ▶ ADJUST → EXIT EXIT

• The H/V Position is thus adjustable.

• SHARPNESS ADJUSTMENTS Sharpness

MENU MENU → SHARPNESS Sharpness → ◀ ▶ADJUST → EXIT EXIT

• The sharpness is thus adjustable.

② OSD

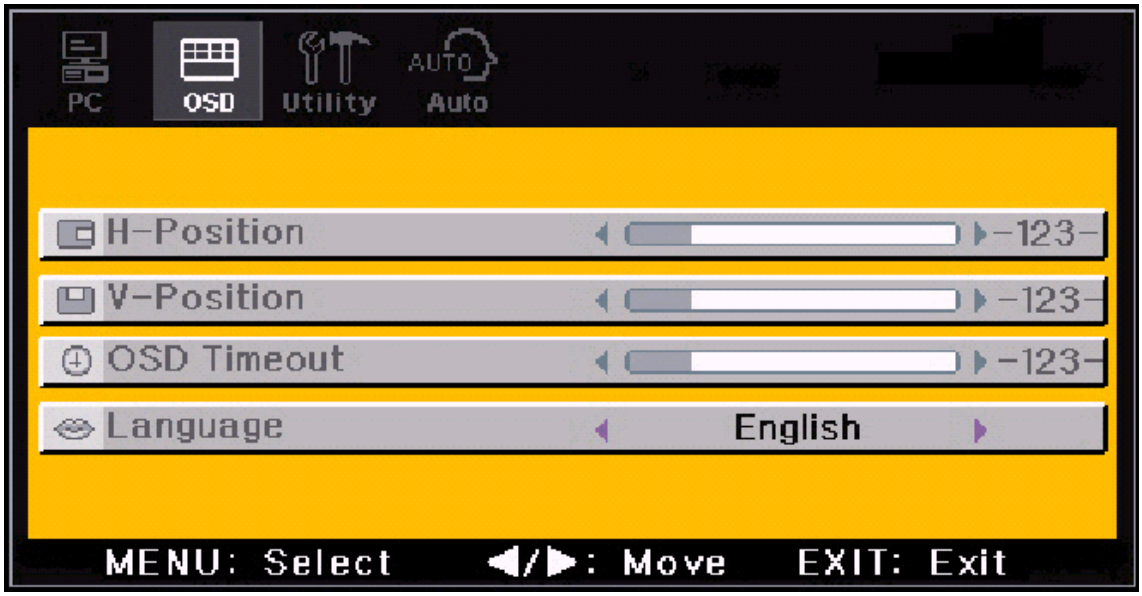

• MENU POSTION ADJUSTMENTS H-Position / V-Position

MENU MENU → ◀ ▶ADJUST→ OSD OSD -> MENU MENU -> H-POSITION H-Position

/ V-POSITION V-Position → ◀ ▶ ADJUST → EXIT EXIT

• The menu position is thus adjustable.

• OSD TIMEOUT ADJUSTMENTS OSD Timeout

MENU MENU → ◀ ▶ADJUST → OSD OSD → MENU -> OSD TIMEOUT OSD Timeout

→ ◀ ▶ ADJUST → EXIT EXIT

• The OSD Display Time is thus adjustable.

• LANGUAGE ADJUSTMENTS

MENU

→ ◀ ▶ADJUST →OSD

-> MENU

LANGUAGE

→ ◀ ▶ ADJUST → EXIT

• The Main Menu can be set in 8 basic languages.
(English, Spanish, French, Italian, German, Chinese, Korean, Japanese)

③ UTILITY

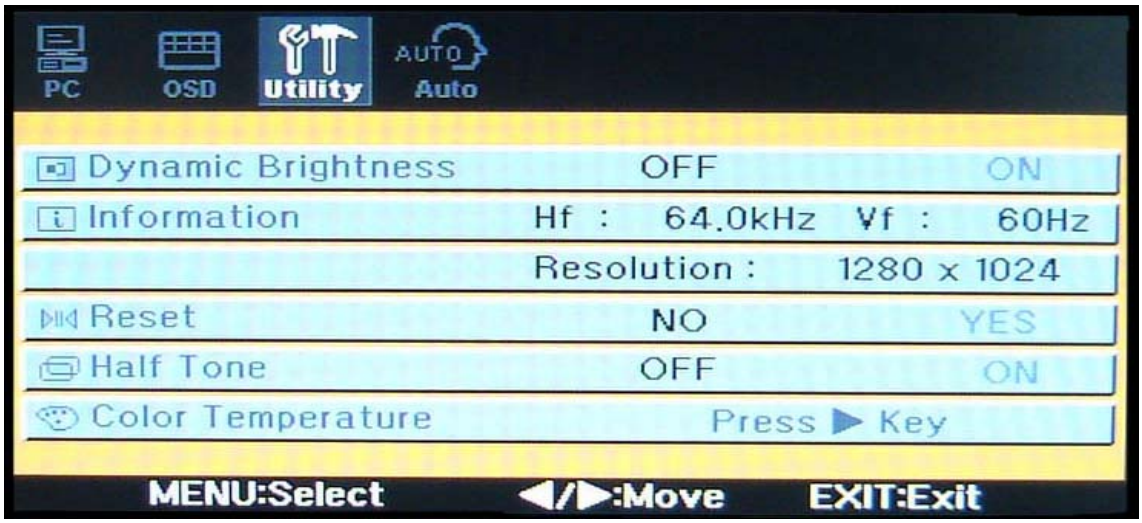

※

This is not an option at the moment.

• MONITOR INFORMATION 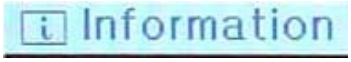

MENU

→ ◀ ▶ ADJUST → UTILITY

-> INFORMATION 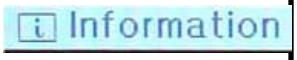

• Basic information of the Vertical & Horizontal Screen Position, Frequency and Phase..
• Pressing the

key while the Menu is not on the screen will inform the user of the current settings and information of the monitor.

• RESETING THE MONITOR Reset

MENU MENU → ◀ ▶ ADJUST → UTILITY Utility -> MENU MENU -> RESET Reset

→ ◀ ▶ ADJUST -> MENU MENU → EXIT EXIT

• The monitor can thus be reset.

• ADJUSTING THE TONE (TRANSPARANCY) Half Tone

MENU MENU → ◀ ▶ ADJUST → UTILITY Utility -> MENU MENU -> HALF TONE Half Tone

→ ◀ ▶ ASJUST → EXIT EXIT

• The Tone (Transparency) of the Menu can thus be adjusted.

• COLOR TEMPERATURE ADJUSTMENTS Color Temperature

MENU MENU → ◀ ▶ ASJUST → UTILITY Utility -> MENU MENU ->

Color Temperature Color Temperature → ▶ SELECT → ◀ ▶ ADJUST

(C1, C2, C3, USER) → EXIT EXIT

• The Color Temperature can be adjusted according to the user.
• The user can adjust the Temperature of RED, GREEN and BLUE.
• The user can reset the settings by the USER COLOR RESET function.

④ AUTO

● AUTO ADJUSTMENTS

MENU

→ ◀ ▶ ADJUST → AUTO

-> MENU

• The monitor automatically adjusts itself to its surroundings.

※ note: Pressing the

Auto Key on the front of the monitor will perform the same function.

◈ Power Saver

This monitor has a built-in power management system called Power Saver. This system saves energy by switching your monitor into a low-power mod when it has not been used for a certain period of time. Pressing any button on the mouse or keyboard will reactivate the monitor. This function is only operates with a computer that has the same function.

State / 동기	Normal Operation	Cable not Connected	Power-Saving Function Mode		
			Standby	Suspend	Power off
Horizontal Sync	Active	Inactive	Inactive	Active	Inactive
Vertical Sync	Active	Inactive	Active	Inactive	Inactive
Video Sig.	Active	Inactive	Inactive	Inactive	Inactive
Power Indicator	Green	Red	Green / Orange Blinking (0.5sec)		
Power Consumption	Less than 37W		Less than 3W		

`

◈ Display Modes

If the signal from the system equals to the standard signal mode, the screen is adjusted automatically. If the signal from the system doesn't equal to the standard signal mode, adjust the mode with referring to the Video card user guide because the screen might not display.

NO	Resolution	Frequency			Sync Polarity(H/V)	
		Horizontal Frequency (Hz)	Vertical Frequency (Hz)	Pixel Clock Frequency(MHz)	Horizontal	Vertical
1	720 X 400	31.5	70.1	28.322	-	+
2	640 X 480	31.5	59.9	25.175	-	-
3	640 X 480	35.0	66.7	30.240	-	-
4	640 X 480	37.9	72.8	31.500	-	-
5	640 X 480	37.5	75.0	31.500	-	-
6	800 X 600	35.2	56.3	36.000	+	+
7	800 X 600	37.9	60.3	40.000	+	+
8	800 X 600	46.9	75.0	49.500	+	+
9	800 X 600	48.1	72.2	50.000	+	+
10	1024 X 768	48.4	60.0	65.000	-	-
11	1024 X 768	56.5	70.1	75.000	-	-
12	1024 X 768	60.0	75.0	78.750	+	+
13	1280 X 1024	64.0	60.0	108.000	+	+
14	1280 X 1024	79.9	75.0	135.000	+	+

◈ TROUBLE SHOOTING

If you have a problem setting up or using your LCD Monitor, you may be able to solve it yourself. Before contacting customer service, try the suggested actions that are appropriate to your problem.

If these problems continue please contact your local retailer.

The Power does not come on.	☞ Please check the Power cord. (Refer page. 8) ☞ Press the Power Button.
The Screen is black but the Power indicator is on	☞ Try adjusting the Brightness of the screen. If the Brightness is set too dark you may not be able to see your screen. (Refer page. 9) ☞ Check the connection cables. If the connecter cable is unplugged the screen may not turn on. (Refer page. 8)
"No input signal, check connection" message	☞ Check that the Signal Cable is correctly attached to the monitor and video card. (Refer Page. 8)
Sync "OUT OF RANGE ~ " message.	☞ Check the frequency of the video adapter. (Refer page.15)
Screen flickering.	☞ Compare the maximum resolution and frequency with the values in the Display modes chart. (Refer page. 16) ☞ Activate the Auto-adjustment. (Refer page. 14)
Shadows on the screen.	
Screen is too bright	☞ Adjust the Brightness or Contrast (Refer page. 9)
Irregular colors on the screen	☞ Make Color Temperature adjustments. (Refer page. 13)
White does not come out as white.	
The Screen Position is not right.	☞ Activate Auto-adjustment. (Refer page. 14)
The Power Indicator keeps on blinking from green to orange.	☞ Check if the computer is in Power Saving mode. Try pressing the keys on the keyboard or moving the mouse.
LCD Screen is blurry.	☞ Adjust the Resolution and Contrast (Refer page. 8) ☞ Activate Auto-adjustment. (Refer page. 14)

◈ SPECIFICATIONS

LCD (PANEL)	Screen size	17 inch
	Visible Screen Size (mm)	337.92(H) X 270.336(V)
	Pixel Range (mm)	0.264(H) X 0.264(V)
	Type	A-si TFT LCD active matrix
	Viewing Angle	65° /65° /55° /55° (L/R/U/D)
PC	Maximum Resolution/ Recommended resolution	1280 X 1024 @75 Hz / 1280 X 1024 @60 Hz
	Horizontal Frequency	30 ~ 80 kHz
	Vertical Frequency	55 ~ 75 Hz
	Display color	16,2 M Colors
	Input Signal	Analog 0.714Vp-p POSITIVE (75Ω)
Power/ Voltage	Recommended voltage	DC 12V / 3.5A
Power Consumption	Maximum	Maximum 37W
	Power Saving Mode	Less than 3W
Operating Environment	Storage temp.	-20℃ ~ 40℃
	Operating moist.	10% ~ 85%
	Operating temp.	0℃ ~ 40℃
Dimensions/ Size	Without stand	29.5X 407 X 337
	With Stand	150 X 407 X 398.8
Dimensions/ Weight	Set	4.11kg
	Gross	6 kg