RED AREAS TO BE SHINNY/GLOSSY FINISH

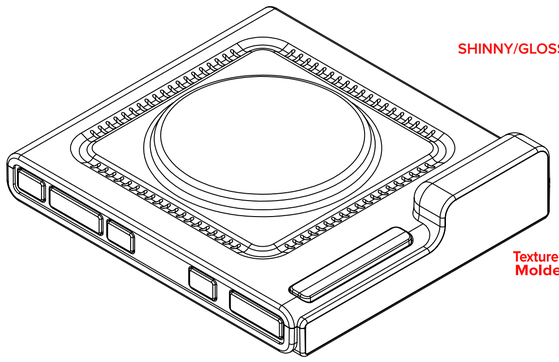

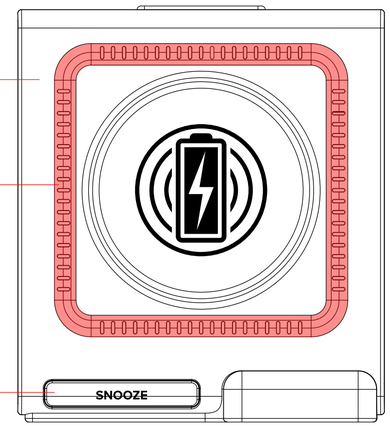

SNOOZE

Silkscreen PMS Cool Gray 8C

Deboss In-Mold
GLOSSY FINISH

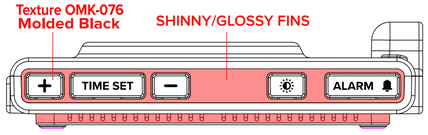

Silkscreen PMS Cool Gray 8C

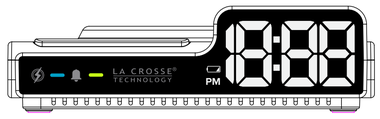

BLACK LENS

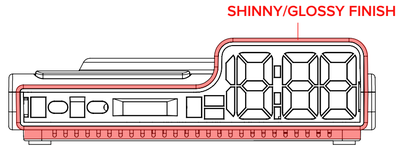

SHINNY/GLOSSY FINISH

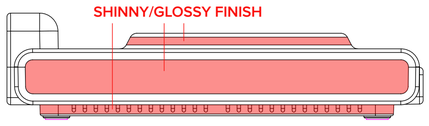

SHINNY/GLOSSY FINISH

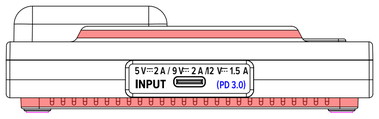

5 V⎓ 2 A / 9 V⎓ 2 A /12 V⎓ 1.5 A
INPUT (PD 3.0)

Emboss **In-Mold**

Silkscreen PMS Cool Gray 8C

Texture OMK-076
Molded Black

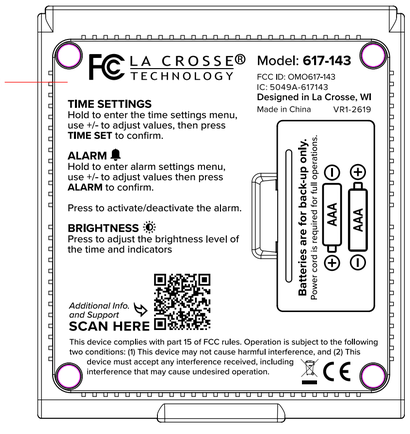

Laser Engrave

Emboss **In-Mold**

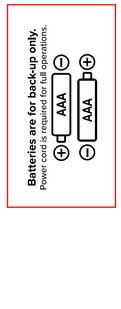

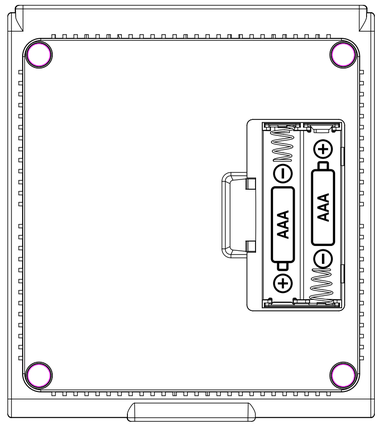

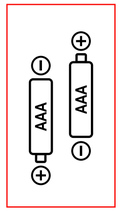

Emboss **In-Mold**