LA CROSSE®
TECHNOLOGY

Model: 327-1414W
Instructional Manual
DC: 091115

Wind Speed Weather Station

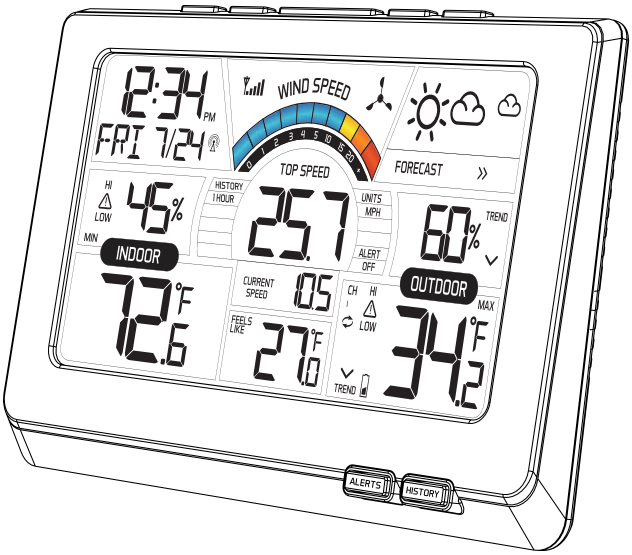

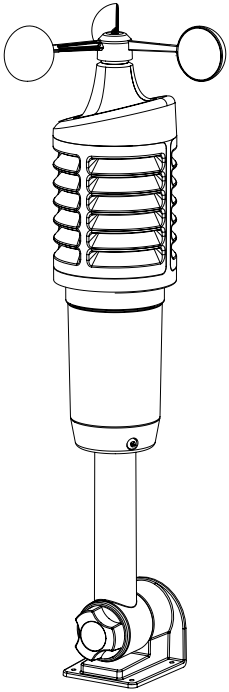

Table Of Contents

Button Location 1
Initial Setup and Assembly 2
Button Functions 5
LCD Layout 6
Settings 7
Color Wind Speed Graph 9
Top Wind Speed Number 9
Wind History 9
Current Wind Speed 10
Wind, Temperature, Humidity Alert .. 10
Arm and Disarm Alerts 11
Heat Index and Dew Point 11
Backlight 11
Forecast Information 12
Forecast Indicator 12
Atomic Time Signal 12
24 Hour MAX/MIN Temp/Humidity .. 12
Additional Temp/Humidity Sensors .. 13
Channel Indicators 13
Channel Auto Scroll 13
Replace Wind Cups 14
Position Wind Sensor 14
Position Add On Sensors 15
Position Weather Station 15
Restart 16
Change Batteries 16
Care and Maintenance 17
Warranty and Support Information .. 17
Specifications 18
FCC Statement 19
Canada Statement 19

Button Location

Front View

Front Buttons

① Alerts
② History

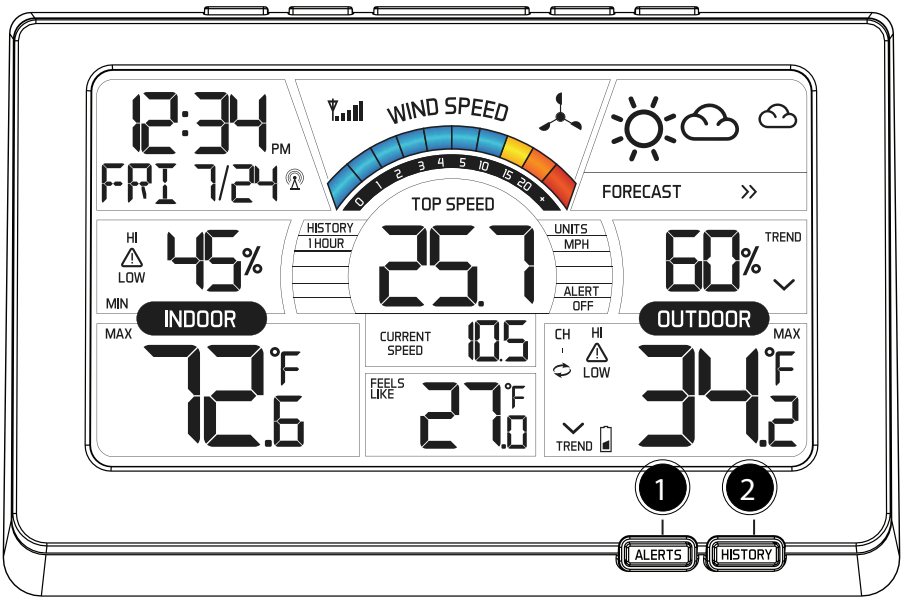

Back View

Top Buttons

① Up
② Heat/Dew
③ Light (HI/LOW-OFF)
④ Time Set
⑤ Down

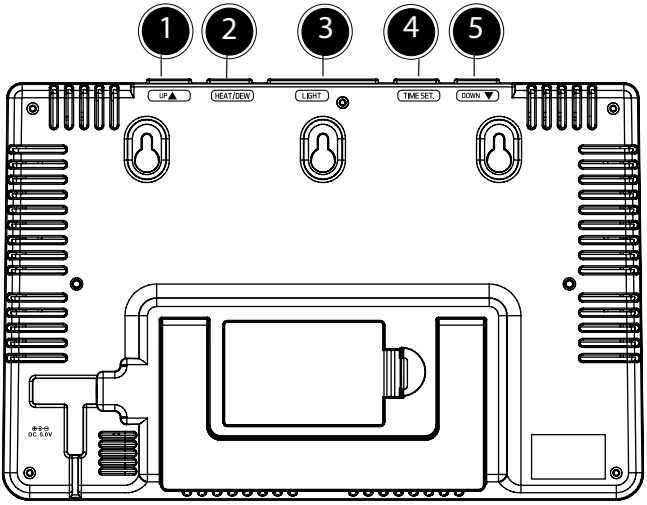

Outdoor Sensor
TX141W

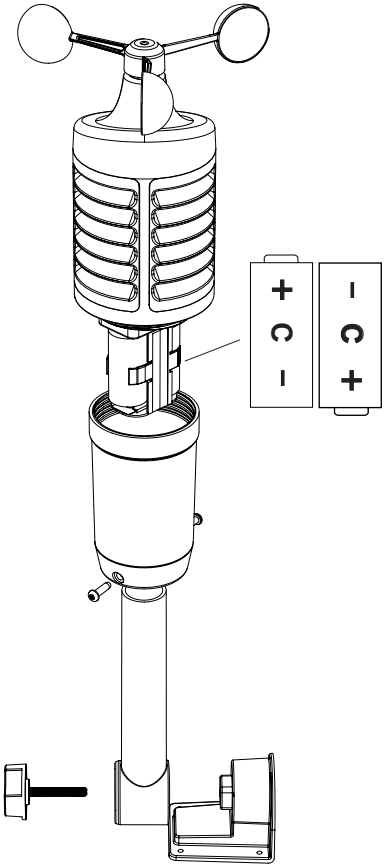

Back View

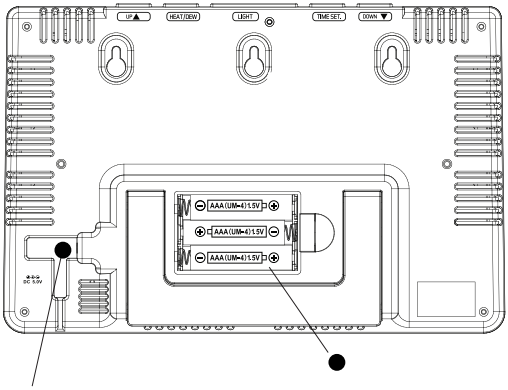

AC/DC Adapter

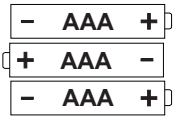

Battery Compartment
3 "AAA" Batteries

Power the Weather Station:

1. Insert AC adapter into the outlet and into the weather station
2. Insert three AAA batteries into the weather station (optional).
3. After 15 minutes, mount the sensor outside (position Wind Sensor).

Initial Setup and Assembly - TX141W Sensor

1. Twist battery cover left to remove from sensor.

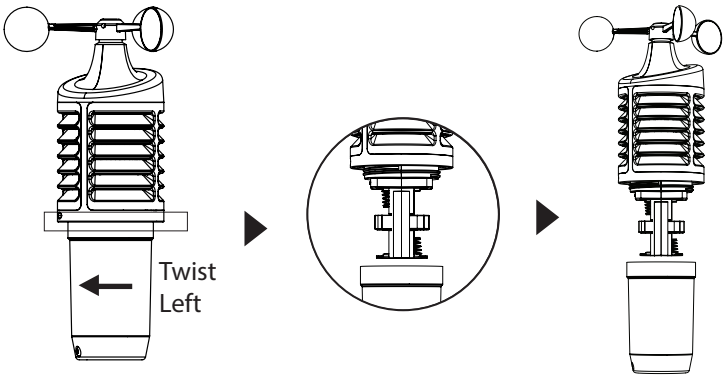

2. Install two "C" batteries according to polarity.

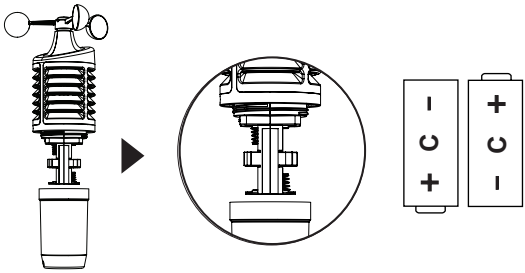

3. The red LED light will flash when transmitting

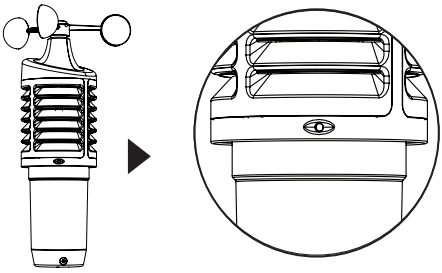

4. Replace the battery cover

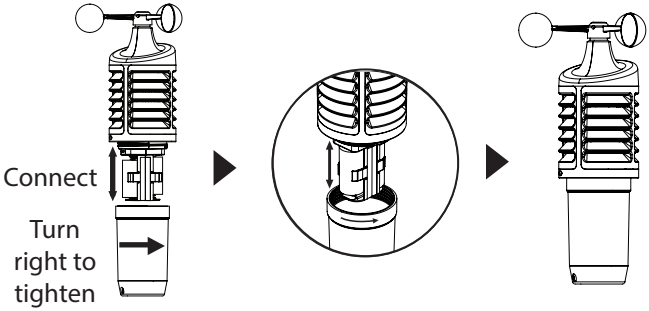

5. Insert pole into bottom of sensor and secure with two screws.

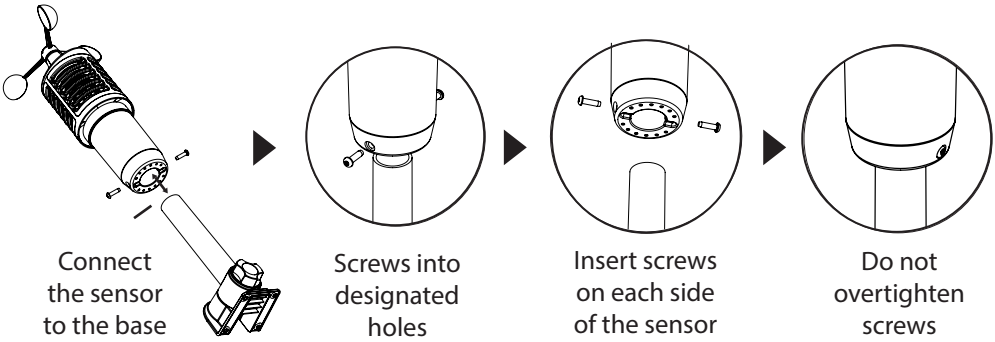

6. Align the square opening on the pole over the square of the mounting bracket.

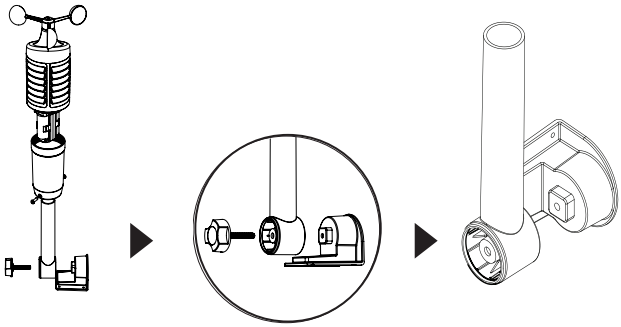

7. Turn the knob to tighten the bracket to the pole

Note: You can attach to a different pole (1.2 inches, 3.1 cm diameter) into the sensor, instead of using the mounting bracket.

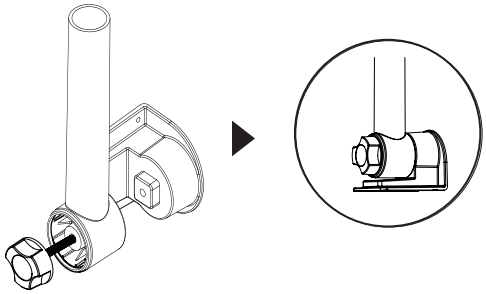

Screw until tight.
Do not overtighten.

Sensor Dimensions

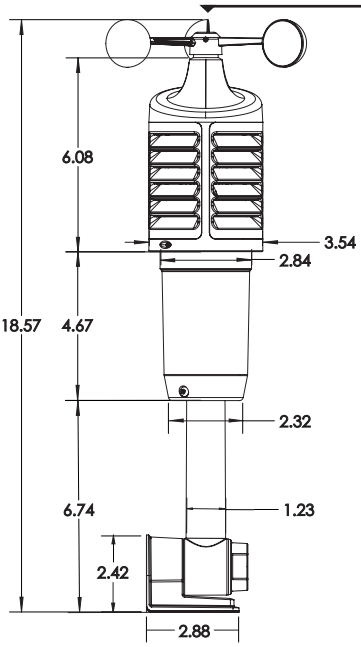

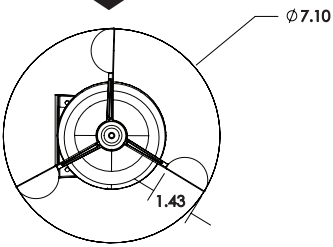

(Top View)

Full Sensor and Bracket (with cup) Dimensions:
18.57″T x 7.10″W x 7.10″D (inch dimensions)

Button Functions

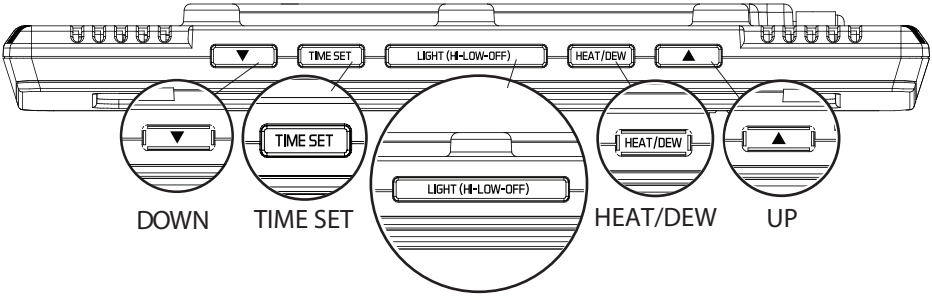

Top Buttons

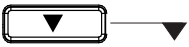

(Down)
- Press to view channels
- Hold to search for sensors
- Will disarm alert

TIME SET
- Press to search for WWVB Atomic time signal
- Hold to enter setting mode

LIGHT (HI-LOW-OFF):
- Press to adjust backlight
- Press to exit setting mode

HISTORY
- Press to view top wind speed history

HEAT/DEW
- Press to view Heat Index/Dew Point

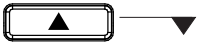

(UP)
- Press to view MAX/MIN values
- Hold to reset MAX/MIN values
- Will arm alert

Front Buttons

ALERTS
- Hold ALERTS button to enter alerts settings
- ▲ or ▼ to adjust value
- Press ALERTS to confirm

ALERT ACTIVATION
- Press ALERTS button to toggle between alerts
- Press ▲ to arm alerts
- Press ▼ to disarm alerts
- Press ALERTS to confirm

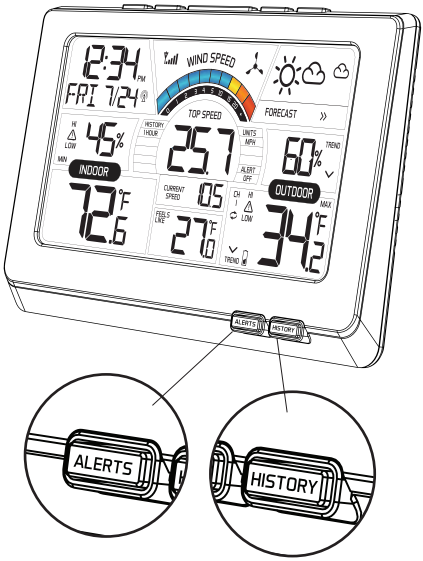

LCD layout

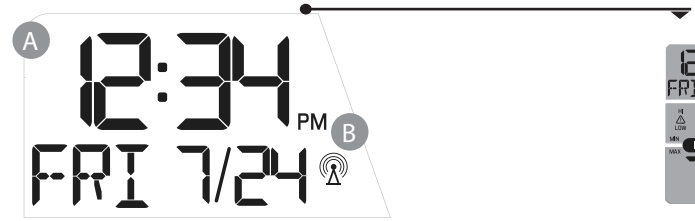

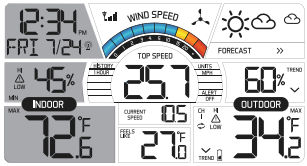

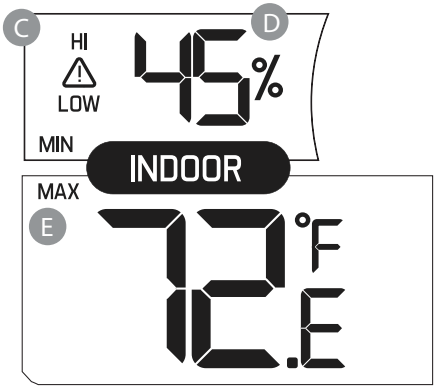

A – Atomic Time/Date

B – Atomic Signal Icon

C – Indoor Humidity Alert Icon HI and LOW

D – Indoor Humidity

E – Indoor Temperature

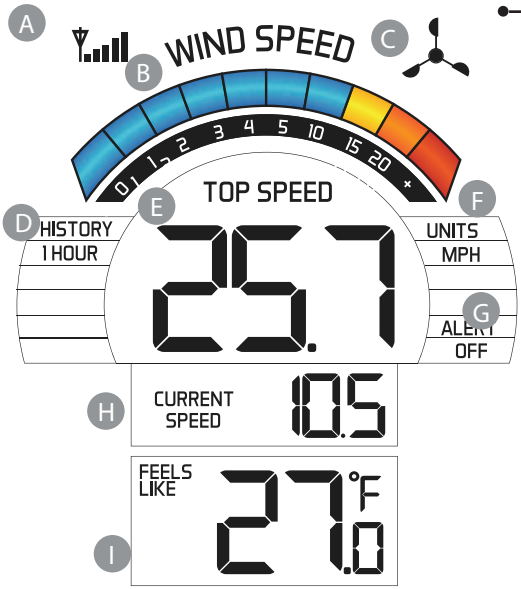

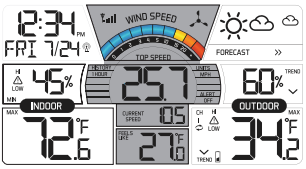

A – Sensor Reception Icon

B – Color Wind Speed Graph (based on current speed)

C – Wind Cup Icon (spins with wind speed)

D – Wind Speed History

E – Top Speed Reading (past 60 minutes)

F – Wind Speed Unit (MPH or KMH)

G – Wind Speed Alert

H – Current Speed (30 second average)

I – Feels Like (Channel 1 only) Heat Index and Dew Point

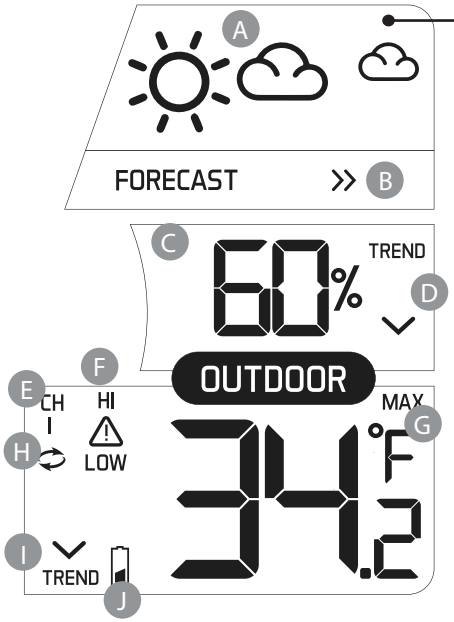

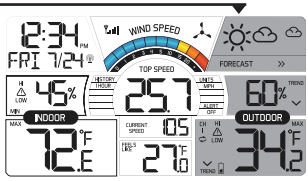

A – Forecast Icon

B – Forecast Trend Indicator

C – Outdoor Humidity

D – Humidity Trend Icon

E – Outdoor Temperature Channel Indicator

F – Outdoor Temperature HI/LO Alert Icon

G – Outdoor Temperature

H – Channel Scroll Indicator

I – Outdoor Temperature Trend Indicator

J – Low Battery Indicator

Settings:

- Hold the TIME SET button to enter settings menu.
- Move through settings with the TIME SET button.
- The ▲ and ▼ buttons will adjust settings.
- Exit at anytime with the LIGHT button.

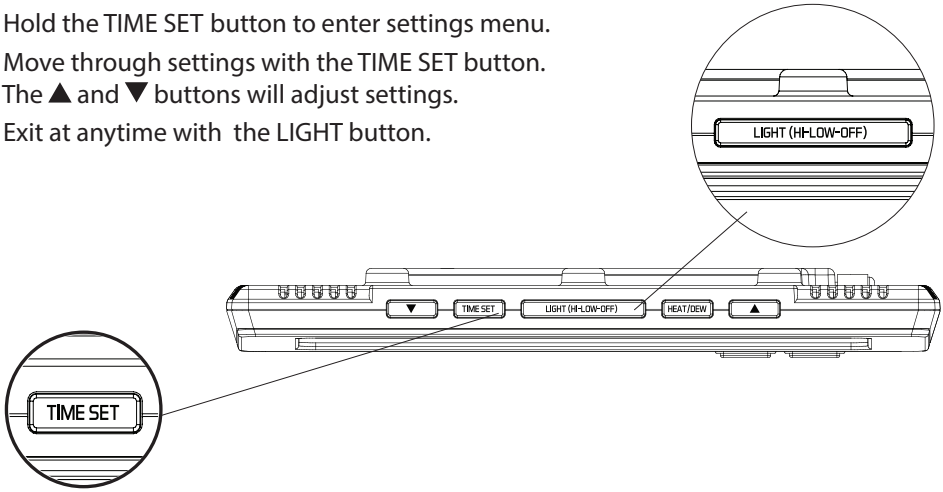

1. Beep ON (default) or OFF

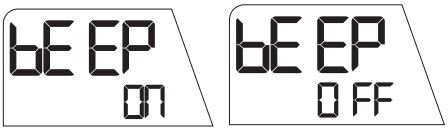

2. Atomic ON (default) or OFF

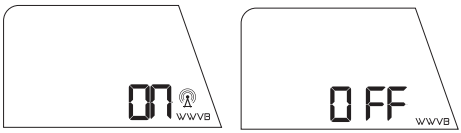

Note: When Atomic OFF is selected, steps 3 & 4 will not show and you will automatically move to step 5.

3. Select Time Zone (EST Default)

Time Zone	
AST	Atlantic
EST	Eastern
CST	Central
MST	Mountain
PST	Pacific
AKT	Alaska
HAT	Hawaiian

4. Select DST ON (default) or OFF

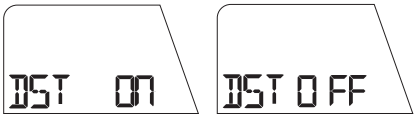

5. Choose 12 (default) or 24 hour time

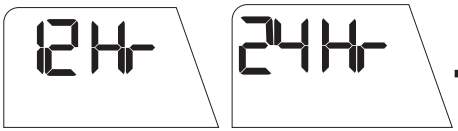

6. Set Hours

7. Set Minutes

8. Set Year

9. Set Month

10. Set Date

11 Select MPH or KMH

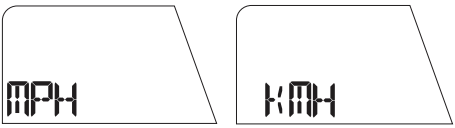

12. Select Fahrenheit / Celsius

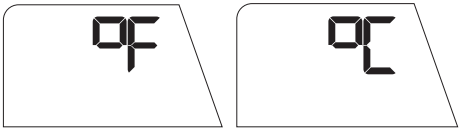

Color Wind Speed Graph

The wind speed graph with color sections is based on current wind speed. One segment will flash indicating current wind speed.

Color	Speed
Blue	0 - 14
Yellow	15 - 19
Orange	20 - 24
Red	over 25

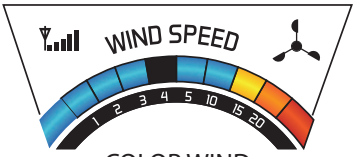

COLOR WIND SPEED ICON

The wind cup icon will spin at varying speeds according to the current speed.

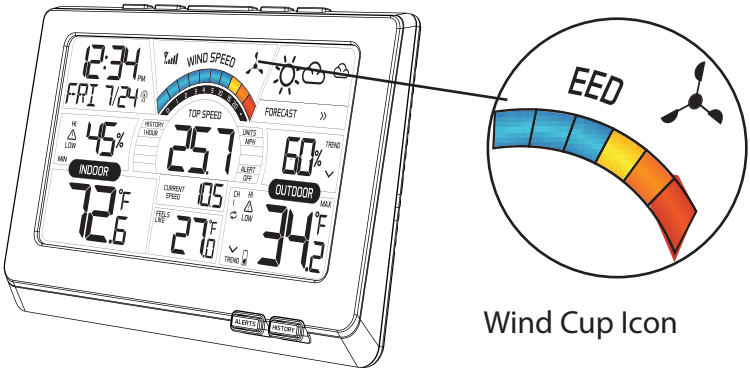

Wind Cup Icon

Top Wind Speed Number

- Highest instantaneous wind speed recorded in the past 60 minutes.
- Updates when a higher wind speed has occurred.
- Last number will remain if there is no wind for 60 minutes.

Wind History

Press and release the HISTORY button to view the past top wind speeds with time and date of occurrence. The 1 hour top speed is the default reading shown on the display.

- 24-hour: Past 24 hour period, from last record.
- Week: Past 7-day period, from last record.
- Month: Defined by Calendar Month
  i.e. January 1 - January 31.
- Year: Defined by Calendar Year
  i.e. January 1 - December 31.

Current Wind Speed

The current wind speed which represents a 30 second average of wind speed samples taken. This should correspond to the wind graph above.

Wind, Temperature & Humidity Alerts

Setting alert value and arming individual alerts are separate functions.

Set alert value:
1. Hold the ALERTS button for 3 seconds to enter alert set mode.
2. The high wind speed alert value will blink in set mode.
3. Press the ▲ or ▼ buttons to adjust the values.
4. Press the ALERTS button to confirm and move to the next alert.

The alert setting order:
- High Wind Speed (channel 1 only)
- Outdoor Humidity HI
- Outdoor Humidity LOW
- Outdoor Temperature HI
- Outdoor Temperature LOW
- Indoor Humidity HI
- Indoor Humidity LOW
- Indoor Temperature HI
- Indoor Temperature LOW

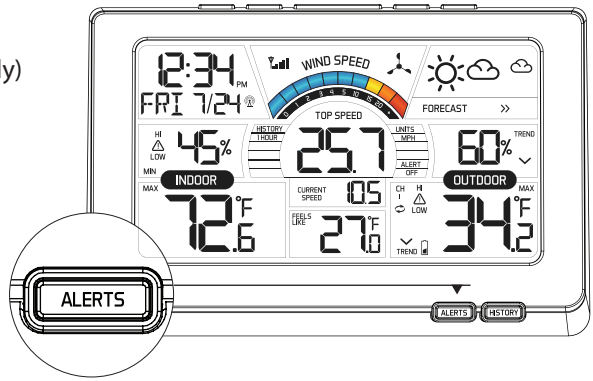

Note: When using multiple temperature/humidity sensors, press the ▼ button to select the channel (1, 2, or 3) before setting alerts for a sensor.

Wind Speed High Alert

Outdoor HI Humidity

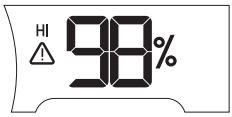

Outdoor LOW Humidity

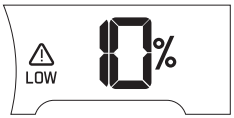

Outdoor HI Temperature

Outdoor LOW Temperature

Indoor HI Humidity

Indoor LOW Humidity

Indoor HI Temperature

Indoor LOW Temperature

Arm/Disarm Alerts:

1. Press and release the ALERTS button to select an alert. HI and LO will flash.
2. Press the ▲ button to arm the alert.
3. Press the ▼ button to disarm the alert.
4. The HI or LO alert icon appears when armed.

Active Alert: Beeps once per minute with flashing alert icon.

Feels Like Temperature, Heat Index, Dew Point Temperature

Press the HEAT/DEW button repeatedly to toggle between:

Feels Like Temperature (Channel 1 only)
Default (always displayed)

Heat Index (outdoor)

Dew Point (outdoor)

Note: Feels Like Temperature is the perceived outdoor temperature.

- Temperatures below 50°F, will measure the effect of wind speed on cooling of the human body.
- Temperatures above 70°F, will measure the effect of humidity on the perception of temperature.
- Between 51 °F and 69°F, the feels like temperature will be the same as the outdoor temperature on channel 1.

Backlight Adjustments

Use AC power for constant backlight:

- Press the LIGHT button on the top of the weather station to adjust the backlight (HI-LOW-OFF) when using AC power.

When using battery power only:

- Press the LIGHT button for a 10 second backlight (It will not stay on).

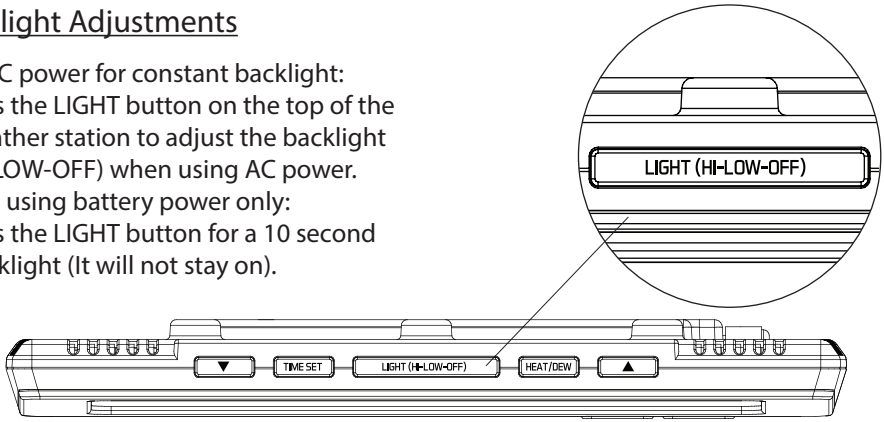

Forecast Information

Intelligent Weather Forecast:

This station learns: Please allow 7-10 days for barometric calibration. This will ensure an accurate personal forecast for your location.

Six animated forecast icons use changing atmospheric pressure to predict weather conditions for the next 12-hours with 70-75% accuracy.

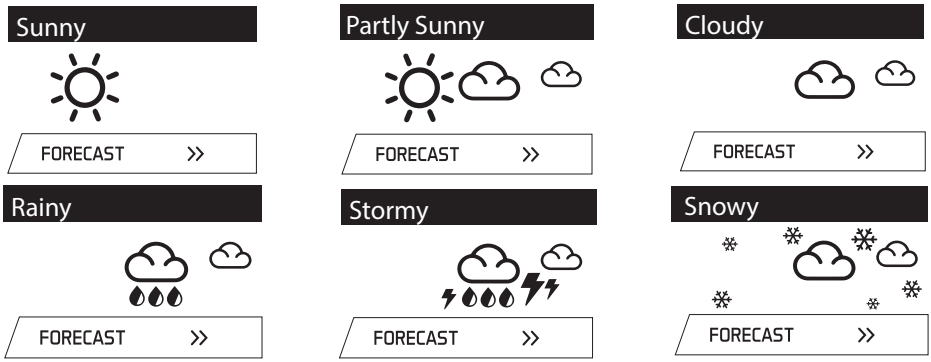

Note: Snowy icon will appear in place of rainy and stormy icons when the outdoor temperature (Channel 1) is below 32°F.

Forecast Tendency Indicators (Up, Right and Down Arrows)

Rising Pressure ^	Steady Pressure »	Falling Pressure v
Weather is expected to improve	Weather is expected to stay the same	Weather is expected to worsen

Atomic Time Signal

— Atomic Icon

- When WWVB is on, press and release the TIME SET button to start or stop a WWVB signal search.
- WWVB Icon will flash when searching.

For information about WWVB, visit: www.nist.gov/pml/div688/grp40/wwvb.cfm

24 hour MAX/MIN Temperature/Humidity records

The station automatically resets MAX and MIN values daily at midnight (12:00 AM).

- Press the ▲ button once to view MAX indoor/outdoor temperatures.
- Then, hold the ▲ button to manually reset MAX temperatures to current values.
- Press the ▲ button again to view the MIN indoor/outdoor temperatures.
- Then, hold the ▲ button to manually reset MIN temperatures to current values.

Setup Add On Temperature/Humidity Sensors

The wind station will accommodate up to two additional thermohygro sensors (TX141TH-BCH) on channels 2 and 3.

Note: The TX141W sensor must be on channel 1.

Press the ▼ button to view sensors on other channels.

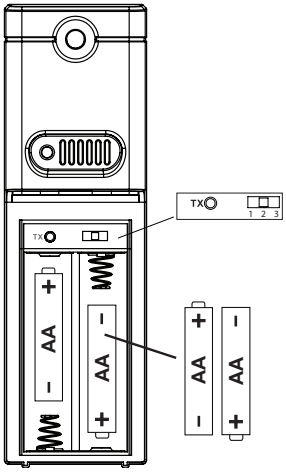

Setup additional sensors to the wind station:

1. Remove the battery cover from all the sensors (leave battery covers off until all sensors are received by the wind station).
2. Set the first additional sensor to Channel 2 and insert 2 AA batteries.
3. Set the second additional sensor to Channel 3 and insert 2 AA batteries.
4. Hold the ▼ button on the wind station for 5 seconds to search for sensors.
5. Press the TX button on each sensor.
6. When connection is established, the temperature & humidity for each of the selected channels will appear.
7. Install the battery covers on each sensor.
8. Keep sensors and the wind station 5-10 feet apart for 15 minutes to establish a solid connection.
9. After 15 minutes, place the remote sensors in appropriate shaded locations.
10. Press and release the ▼ button to view channels 1, 2 or 3 on the wind station when multiple sensors are used.

Note: If only one sensor is connected, the other channels will show dashes for temperature and humidity.

Channel Indicator

CH
123

- Press the ▼ button to toggle between remote sensor channels when multiple sensors are used.

Channel Auto Scroll

- The wind station will automatically rotate through the channels for all connected sensors.
- Press and release the ▼ button to lock the wind station into one channel.
- Then press the ▼ button to view channels individually.

Replace Wind Cups

1. Loosen the screw
2. Remove cups
3. Install new cups
4. Tighten screw

Note: The screw in the wind cups will fit on the flat side of the metal stem on the sensor.

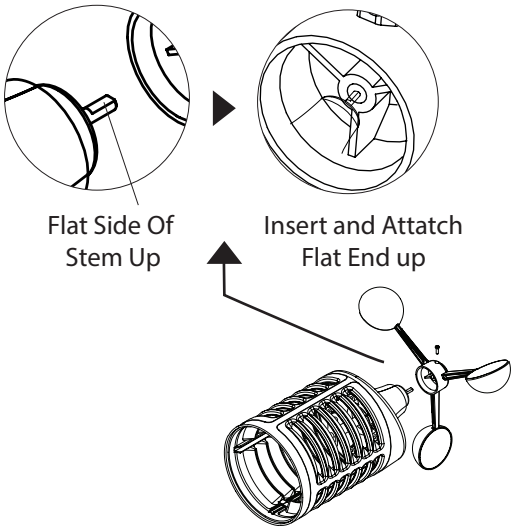

Position Wind Sensor

- For the most accurate wind speed readings, mount the TX141W sensor as the highest object for 50 feet in all directions.
- Cups should be on the top of the sensor. Mount vertically.
- The maximum wireless transmission range to the wind station is over 300 feet (91 meters) in open air, not including walls or trees.

1. Insert mounting pole into sensor.
2. Tighten screws
3. Insert bottom of pole into mounting bracket
4. Tighten knob to secure
5. Use screws through the bottom of the mounting bracket to attach.
6. The sensor can be mounted from the bottom or side. (the picture is of the sensor mounted from the side)

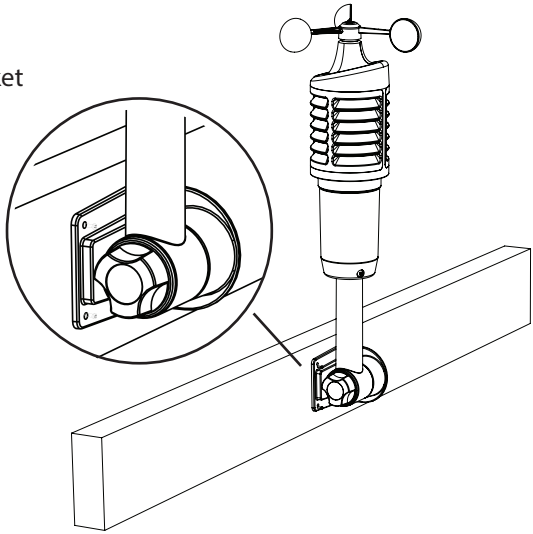

Alternatively:
1. Insert your own mounting pole into the sensor.
2. Tighten screws
3. Mounting bracket would not be used.

Note: Do not attempt to insert a pole into the hollow back of the mounting bracket.

Position Add On Sensors

- Mount the outdoor sensor on a north-facing wall or in any well shaded area. Under an eave or deck rail is preferred.
- The maximum wireless transmission range to the weather station is over 300 feet (91 meters) in open air, not including walls or floors.
- Be sure the outdoor sensor is mounted vertically

Option 1:
- Install one mounting screw into a wall leaving some extended.
- Place the transmitter onto the screw.
- Gently pull the transmitter down to lock the screw into place.

Option 2:
- Insert the mounting screw through the front of the transmitter and into the wall.
- Tighten the screw to snug (do not over tighten).

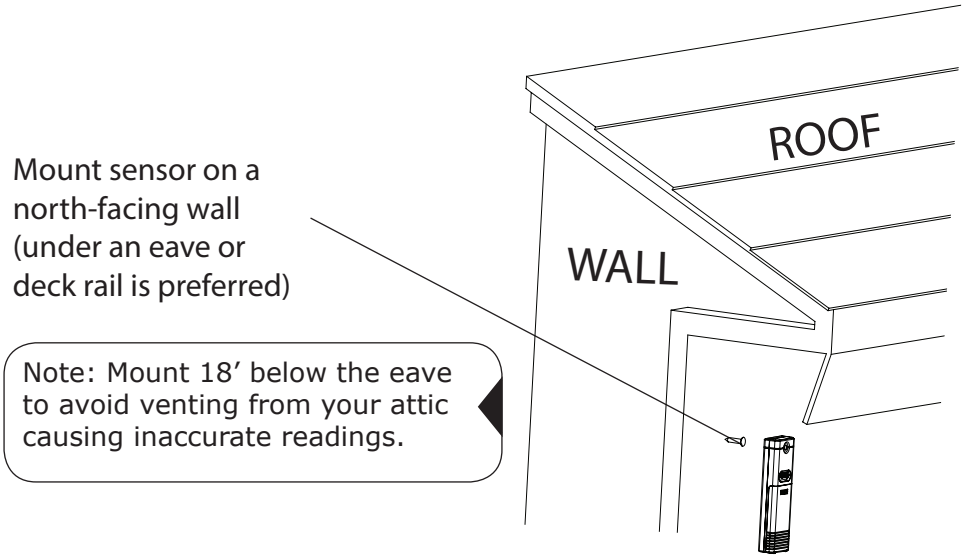

Position Weather Station

- Pull out the stand and place on a flat surface.
- Use the three hanging holes on the back to mount on the wall.

1. Choose a location 6 feet or more away from electronics such as cordless phones, gaming systems, televisions, microwaves, routers, etc.
2. Place within range of the outdoor sensors (300 ft, 91 meters open air).
3. Obstacles such as walls, windows, stucco, concrete, and large metal objects can reduce the range.
4. For best WWVB reception, orientate the weather station with the front or back of the station facing Ft. Collins, Colorado.

Restart

1. Remove batteries from the sensor and batteries and AC adapter from the weather station.
2. Press any button 20 times.
3. After 15 minutes insert batteries into the sensor, then insert batteries (optional in the weather station) and plug AC adapter into the weather station.
4. Wait 15 minutes to establish a strong connection. Place sensor outside.

Change Batteries

TX141W Sensor mounted:

1. Grab the vented portion of the sensor and turn counter clockwise.
2. Remove old batteries and install fresh "C" batteries.
3. Carefully align and turn clockwise to tighten.
4. Hold the ▼ button on the weather station for 5 seconds to search for the sensor.

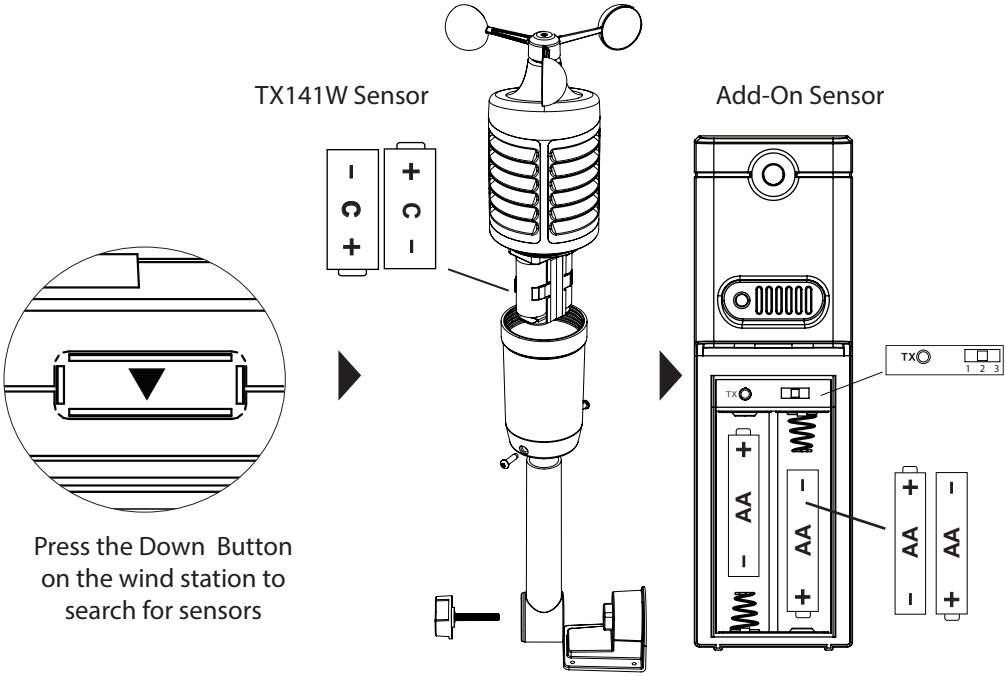

Add on Sensor(s):

1. Slide battery cover down and lift off sensor.
2. Remove old batteries and install fresh "AA" batteries.
3. Hold the ▼ button on the weather station for 5 seconds to search for the sensor.

Care and Maintenance

- Do not mix old and new batteries
- Do not mix Alkaline, Standard, Lithium or Rechargeable Batteries
- Always purchase the correct size and grade of battery most suitable for the intended use.
- Replace all batteries of a set at the same time.
- Clean the battery contacts and also those of the device prior to battery installation.
- Ensure the batteries are installed correctly with regard to polarity (+ and -).
- Remove batteries from equipment which is not to be used for an extended period of time.
- Remove expired batteries promptly.
- Do not expose to extreme temperature, vibration or shock.
- Clean with a soft damp cloth. Do not use solvents or scouring agents.
- The product is not a toy. Keep it out of reach of children.
- The product is not to be used for medical purpose or for public information. It is intended for home use only.
- The specs of this product may change without prior notice.
- Improper use or unauthorized opening of housing voids warranty.
- If the product is not working properly, change the batteries and/or check the AC adapter connection.

Warranty and Support Information

La Crosse Technology, Ltd. provides a 1-year limited time warranty (from date of purchase) on this product relating to manufacturing defects in materials & workmanship.

Before returning a product, please contact our friendly customer support with questions or visit our online help (FAQS):

Phone: 1-608-782-1610

Online Product Support: www.lacrossetechnology.com/support

Product Registration: www.lacrossetechnology.com/support/register

View full warranty details online at:
www.lacrossetechnology.com/warranty_info.pdf

Warranty Address:
La Crosse Technology, Ltd
2830 S. 26th St.
La Crosse, WI 54601

Protected under U.S. Patents:
5,978,738 | 6,076,044 | RE43903

Specifications	
Indoor	• Temperature Range: 32°F to 122°F (0°C to 50°C) • Humidity Range: 10% - 99% (RH) • Interval: about every 30 seconds
Outdoor	• Temperature Range: -40°F to 140°F (-40°C to 60°C) • Humidity Range: 10% - 99% (RH) • Wind Speed Range: 0 - 99 mph (0-159 kMh) • Distance: Over 300ft. (91 meters) RF 433MHz (open air)
Power	• Wind Station Primary AC Power: 5-volt AC power adapter (included in lower panel) • AC Adapter NO.: GPU280500150WD00 5VDC 150mA • Optional/Battery Backup: 3-AAA, IEC, LR3 batteries (not included) • Wind/TH Sensor: 2-C, IEC, LR14 batteries (not included)
Battery Life	• Wind Station Battery Backup: Battery life is over 12 months when using the AC adapter for primary power • Wind/TH Sensor: Battery life is over 24 months when using reputable battery brands
Dimensions	• Wind Station: 5.48" H x 8.34" L x 1.03" W (139.19 x 211.84 x 26.12 mm) • TX141W Sensor: 18.57" H x 7.10" W x 7.10" D (471.68 x 180.34 x 180.34 mm)

FCC Statement

This equipment has been tested and found to comply with the limits for a Class B digital device, pursuant to part 15 of the FCC Rules. These limits are designed to provide reasonable protection against harmful interference in a residential installation. This equipment generates, uses and can radiate radio frequency energy and, if not installed and used in accordance with the instructions, may cause harmful interference to radio communications. However, there is no guarantee that interference will not occur in a particular installation. If this equipment does cause harmful interference to radio or television reception, which can be determined by turning the equipment off and on, the user is encouraged to try to correct the interference by one or more of the following measures:

- Reorient or relocate the receiving antenna.
- Increase the separation between the equipment and receiver.
- Connect the equipment into an outlet on a circuit different from that to which the receiver is connected.
- Consult the dealer or an experienced radio/TV technician for help.

The FCC statement is found inside the battery compartment.

This device must not be co-located or operating in conjunction with any other antenna or transmitter.
Operation is subject to the following two conditions:
(1) this device may not cause harmful interference, and
(2) this device must accept any interference received, including interference that may cause undesired operation.

Caution!

The manufacturer is not responsible for any radio or TV interference caused by unauthorized changes or modifications to this equipment. Such changes or
modifications could void the user authority to operate the equipment.

All rights reserved. This manual may not be reproduced in any form, even in part, or duplicated or processed using electronic, mechanical or chemical process without the written permission of the publisher.

This booklet may contain errors or misprints. The information it contains is regularly checked and corrections are included in subsequent editions. We disclaim any responsibility for any technical error or printing error, or their consequences.

All trademarks and patents are recognized.

Canada Statement

This device complies with Industry Canada's licence-exempt RSSs. Operation is subject to the following two conditions:
(1) This device may not cause interference; and
(2) This device must accept any interference, including interference that may cause undesired operation of the device.

Le présent appareil est conforme aux CNR d'Industrie Canada applicables aux appareils radio exempts de licence. L'exploitation est autorisée aux deux conditions suivantes :
(1) l'appareil ne doit pas produire de brouillage;
(2) l'utilisateur de l'appareil doit accepter tout brouillage radioélectrique subi,

même si le brouillage est susceptible d'en compromettre le fonctionnement.