LA CROSSE®
TECHNOLOGY

Model: 724-1710v2
Instructional Manual
Current Date: 070715

Wireless Rain Station with Indoor/Outdoor Temperature

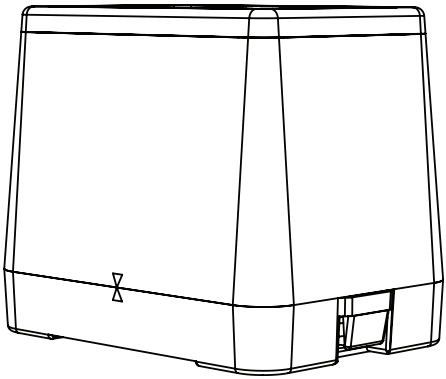

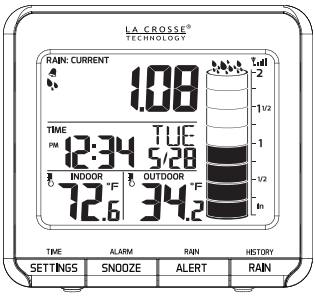

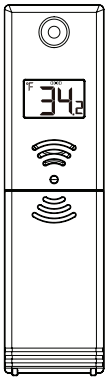

Table Of Contents

Button Location ---------- 1
Assembly and Setup ---------- 2
TX23R Rain Sensor ---------- 2
TX23T Temperature Sensor ---- 4
724-1710v2 Rain Station ------- 5
LCD Features ---------- 5
Button Functions ---------- 6
Settings ---------- 7
Rainfall Alert (24 Hour) -------- 9
Activate/Deactivate Alert ------- 9
Low Battery Icons ---------- 9
Rain Readings and
Cylinder Graph ---------- 10
Clear Current Rainfall Readings - 11
Rainfall Daily History
(365 days maximum) ---------- 11
Clear Daily History Records ---- 12
Time Alarm ---------- 12
Activate/Deactivate Time Alarm - 12
Snooze ---------- 12
Search for Rain Sensor ---------- 13
Search for Temperature Sensor - 13
Position Rain Sensor ---------- 13
Position Temperature Sensor --- 13
Specifications ---------- 14
Care and Maintenance ---------- 15
Warranty and Support ---------- 15
FCC Statement ---------- 16
Canada Statement ---------- 17

Button Location

1. Front View

Front Buttons

① Time Settings
② Alarm Snooze
③ Rain Alert
④ History Rain

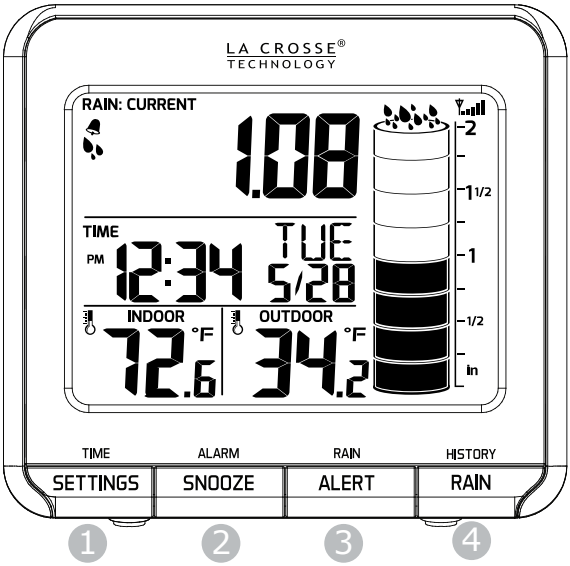

Back View

Back Buttons

① Daily History/Clear
② TX Search

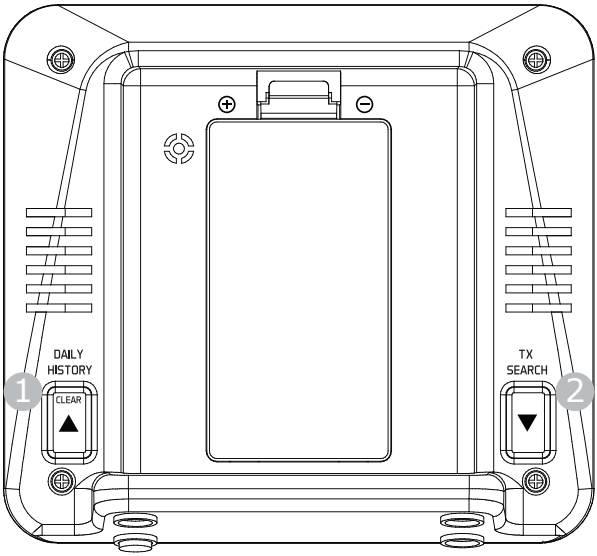

Assembly and Setup

Lets identify the parts of the rain sensor.

TX17R Rain Sensor

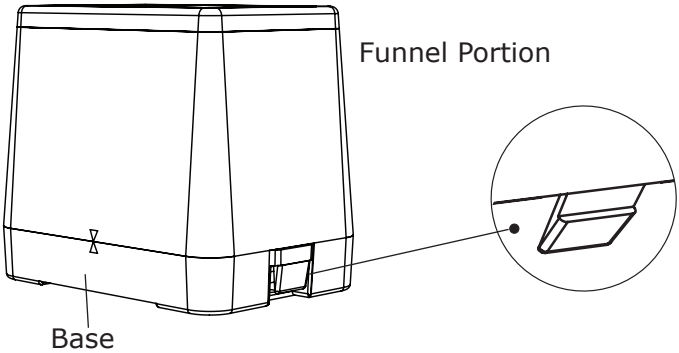

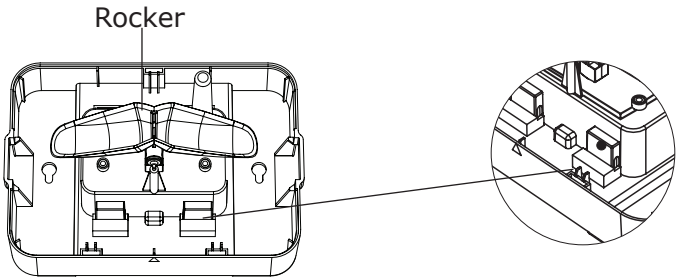

1. Press the two tabs on each end of the rain sensor and lift off the funnel portion.

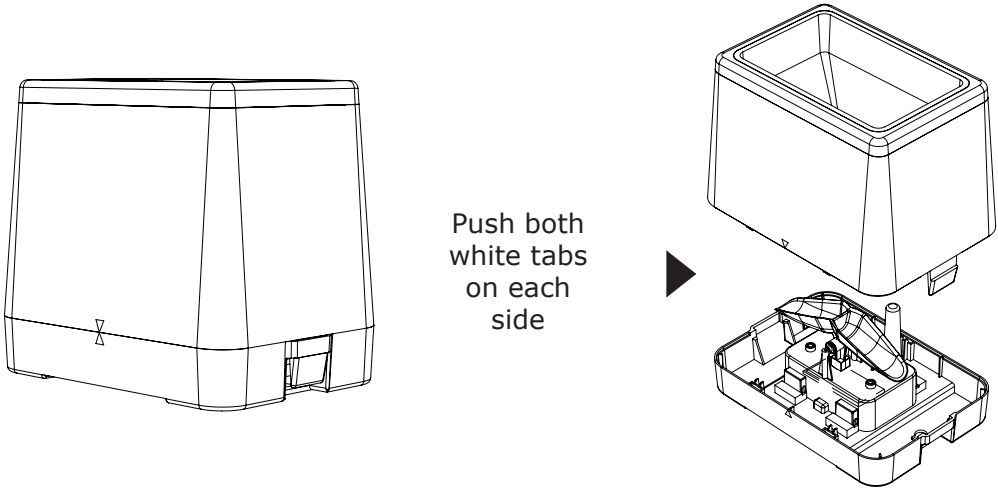

2. The battery compartment is under the rocker. Firmly squeeze all four tabs and lift battery compartment off of base and turn it upside down to show battery compartment.

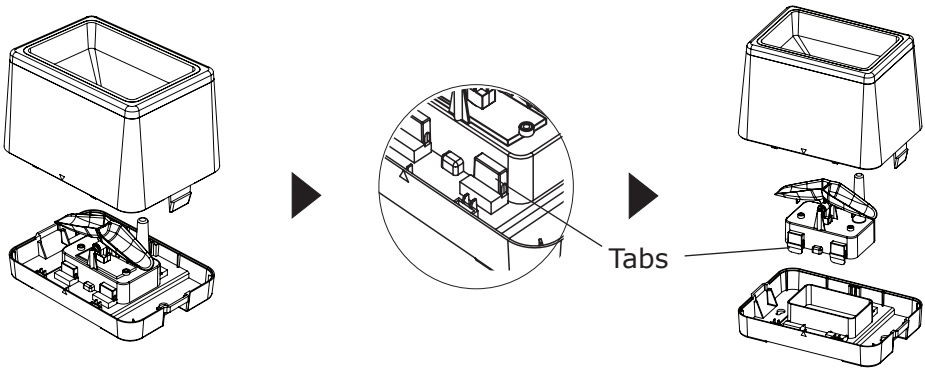

3. Insert 2 “AA” Alkaline batteries below the rocker of the TX23R rain sensor.

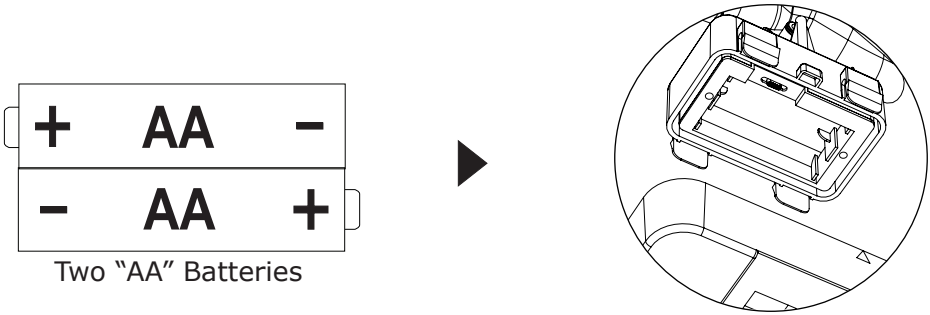

Two “AA” Batteries

4. Position the battery compartment over base and press down so all four tabs lock in place.

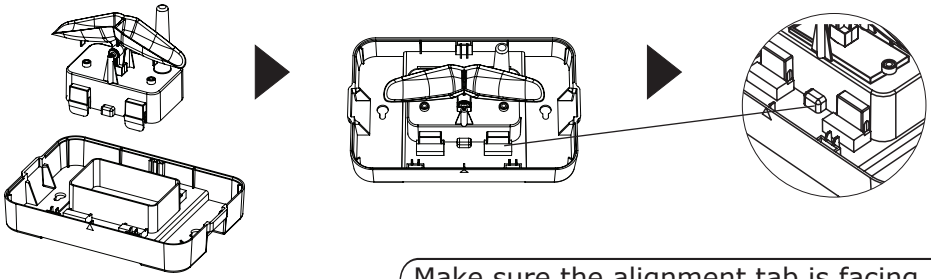

Make sure the alignment tab is facing the arrow on the base.

5. Match the UP arrow on the front of the blue base and the DOWN arrow on the front of the white funnel portion.

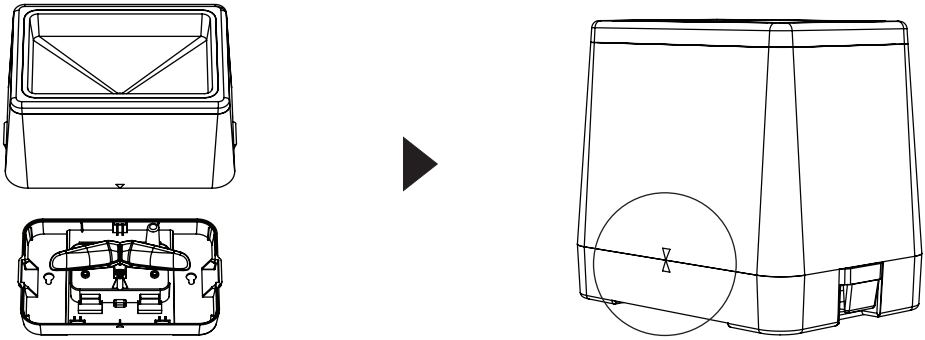

Arrows

6. Press down until the white tabs lock in place.

Note: It is important to match up the arrows, as the rocker is offset by the antenna; the funnel needs to center over the rocker in order to record rainfall.

TX23T Temperature Sensor

1. Insert batteries into the outdoor temperature sensor. Observe the correct polarity.
2. The red LED will flash during transmission.

2 “AA” Batteries

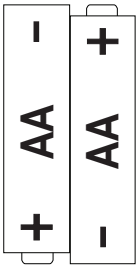

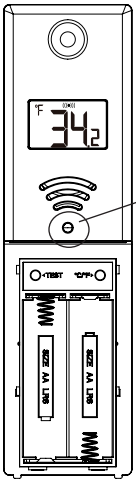

Red LED

724-1710v2 Rain Station

1. Insert batteries into the rain station. Observe the correct polarity.
2. Leave the rain station and sensors sit 5 -10 feet apart for 15 minutes to lock in both sensors.
3. Both the temperature and the rain sensor should appear on the rain station in the first minute.
4. You can tip the rocker of the rain sensor to simulate rain and receive a reading to the rain station.
5. After 15 minutes mount the rain sensor in an open area outside. Mount the temperature sensor in a shaded location outside.

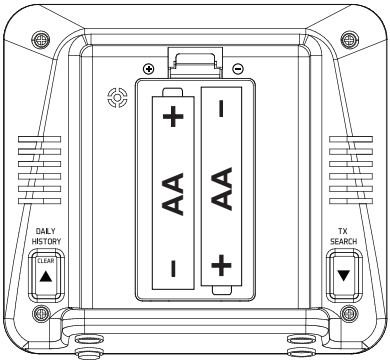

LCD Features

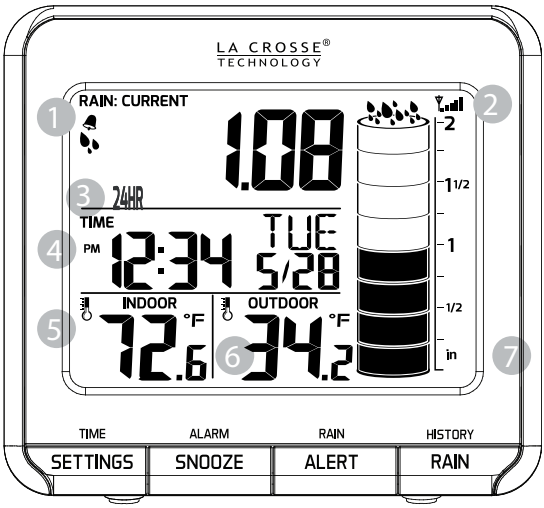

1. Rainfall Alert Icon
2. Rain Sensor Reception Icon
3. Rainfall: Current, 1hour, 24 Hour, 7 days, Month, and Total
4. Time, Date, Days Ago Rainfall History
5. Indoor Temperature
6. Outdoor Temperature
7. Rainfall Graph

Button Functions

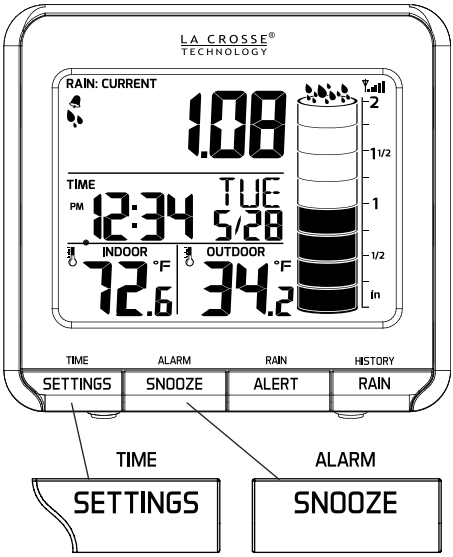

SETTINGS Button (Time)

Normal Mode:
- Hold to enter settings mode.

Settings Mode:
- Press to confirm a setting and move to next item.

SNOOZE Button (Alarm)

Normal Mode:
- Press to view Alarm time.

Alarm Mode:
- Hold to set Alarm time.
- Press to arm/disarm alarm.

Alarm Ringing:
- Press to arm snooze feature for 10 minutes.

Snooze Mode:
- Press to exit snooze mode.

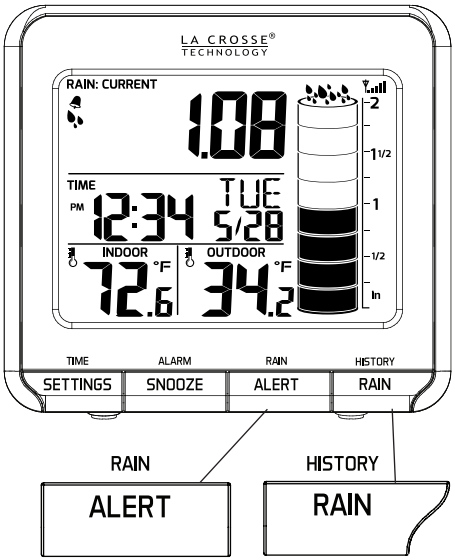

ALERT Button (Rain)

Normal Mode:
- Hold to enter rain alert mode.
- Press to view rain alert

Alerts Mode:
- Press to arm/disarm rain alert

RAIN Button (History)

Normal Mode:
- Hold to search for rain sensor.
- Press to view current rain readings. (1HR, 24HR, 7 DAYS, MONTH, TOTAL)

Back Buttons

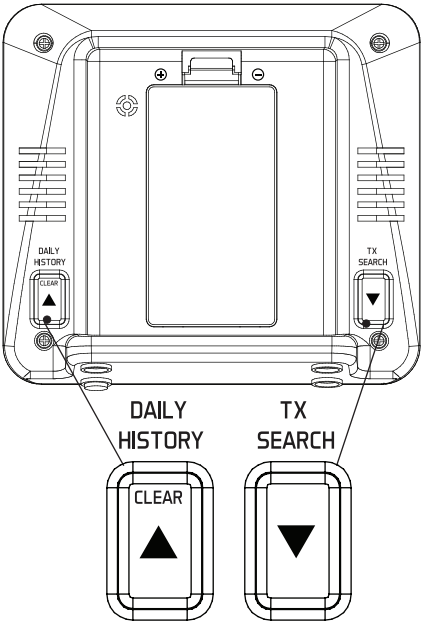

UP ARROW (Daily History, Clear)

Normal Mode:
- Hold to clear current rainfall readings.
- Press to view Days Ago History

Days Ago History Mode:
- Press to history 1 day at a time.
- Hold to search history by date.

Settings Mode:
- Press to increase a value.

DOWN ARROW (TX Search)

Normal Mode:
- Hold to search for outdoor temperature sensor.

Settings Mode:
- Press to decrease a value.

Settings

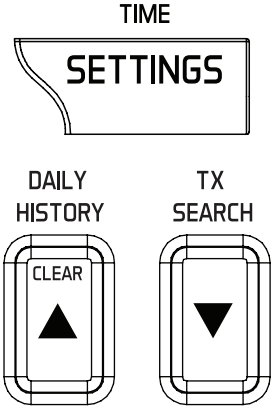

- Hold the SETTINGS button to enter set mode.
- Press the ARROW buttons (back) to adjust a value.
- Press the SETTINGS button to confirm and move to next item.

Settings order:
1. 12/24 hour
2. Year
3. Month
4. Date
5. Hour
6. Minutes
7. Language (English/Spanish/French)
8. °F/°C
9. MM/IN (millimeters or inches for rain)

Note: The rain station will default out of set mode when no buttons are pressed for 20 seconds.

1. 12Hr (default) or 24Hr time

or

2. Select Year

3. Select Month

4. Select Date

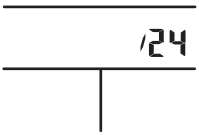

5. Select Hour

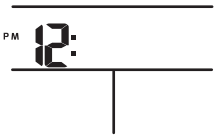

6. Select Minutes

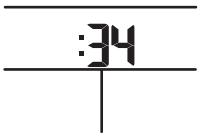

7. Set Language

or

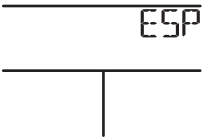

or

8. Set Fahrenheit or Celsius

or

9. Select Inches or Millimeter

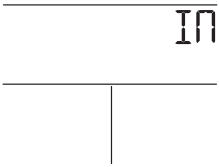

or

Rainfall Alert (24 Hour)

1. Press the ALERT button to enter Rain Alert Mode.
2. In Alert mode, hold the ALERT button until the rain station beeps to set the 24 hour rainfall alert.
3. Press the ARROW buttons to adjust the alert value.
4. Press the ALERT button to confirm.

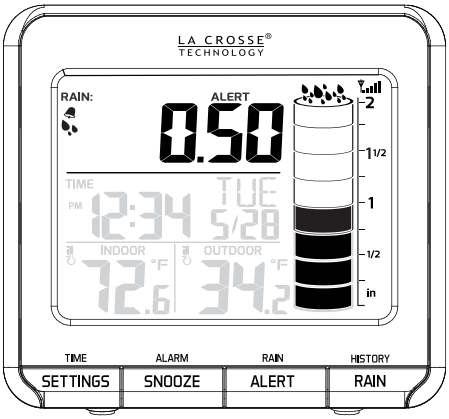

Activate/Deactivate Rainfall Alert

- In alert mode press and release the ALERT button to activate or deactivate the alert.
- The alert bell icon will show when active.
- When the alert value is reached, the alarm will beep for 5 seconds, then once each minute.
- Press any button to stop the alert from sounding

Low Battery Indicators

1. Rain sensor batteries
2. Rain station batteries
3. Temperature sensor batteries

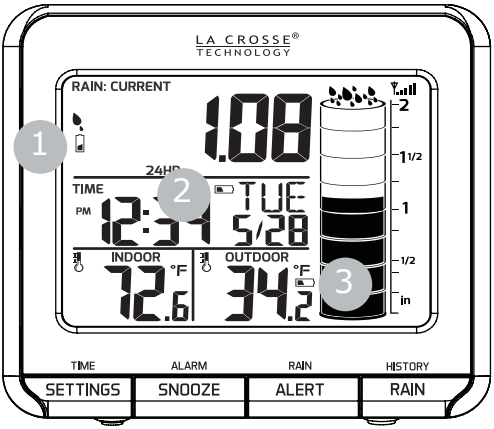

Rain Readings and Cylinder Graph

Rain readings with a corresponding cylinder graph. Press and release the RAIN button to view rain readings in the Rain Window.

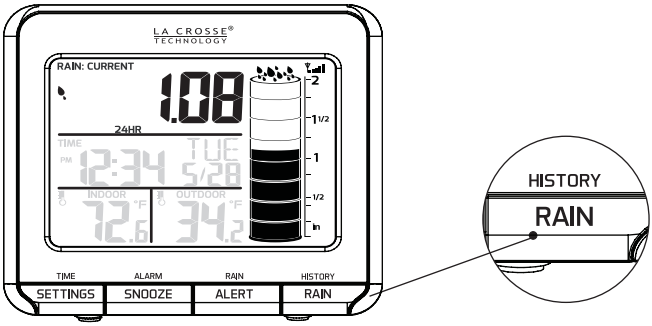

CURRENT

Rain readings from the start of a rain event until no rain accumulation for 30 minutes. This will reset to zero after 30 minutes of no rainfall.

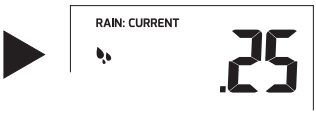

1 HR

Rainfall of the last 12 consecutive 5 minutes of rainfall. Example: if rain started at 5:50, the data from 5:50 to 6:49 means 1 HR. Reading resets to zero at the top of each hour.

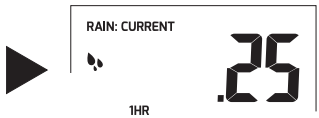

24 HR

Based on the past 24, 1-hour increments. This is a running total that changes hourly.

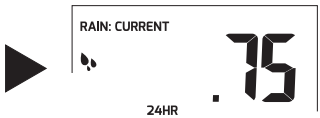

7 DAYS

Based on the last 7, 24-hour readings. This is not a subject to the calendar. Be sure time and date are set.

MONTH

Total rainfall from the first day of the month to last day of the month.

TOTAL

Total rainfall since powered on or reset.

Note: As time passes without rain, the 1 hour, 24 hour, and 7 day rain totals will count down to zero.

Clear Current Rainfall Readings

- Press the RAIN button to select which rainfall reading to clear.
- Hold the UP ARROW button to clear the individual record.
- Each record can be cleared individually.
- This will not clear histroy (DAYS AGO) records.

Rainfall Daily History Record (up to 365 days)

View rainfall history by toggling back one day at a time or search by date.

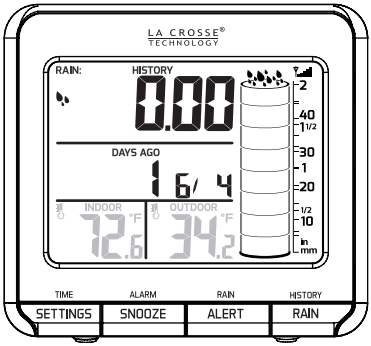

One Day at a Time:

- Press the UP ARROW button to view the rain history.
- DAYS AGO and the date appear.
- Press UP ARROW button repeatedly, to scroll back one day at a time. (365 days of record history maximum)

Search by Date:

1. Press the UP ARROW button to view the rain history. 2. DAYS AGO heading and the date appear.
3. In DAYS AGO mode, hold the UP ARROW until the rain station beeps.
4. The Year will flash. Press the ARROW buttons to select the Year.
5. Press SETTINGS button to confirm and move to Month.
6. The Month will flash. Press the ARROW buttons to select the Month.
7. Press SETTINGS button to confirm and move to the Date.
8. The Date will flash. Press the ARROW buttons to select the Date.
9. Press SETTINGS button to confirm and exit.

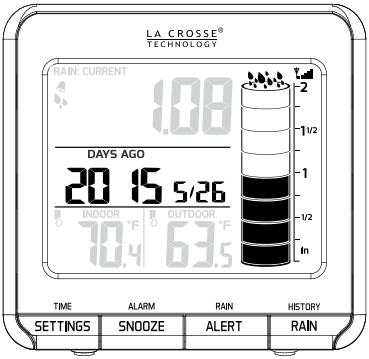

Note: If no buttons are pressed for 20 seconds, the rain station will default to normal mode.

Clear Rainfall Daily History Records

- Remove batteries.
- Insert batteries.
- Hold the ARROW buttons together.

Note: removing batteries will clear all current readings.

Time Alarm

1. Press the SNOOZE button to enter alarm mode.
2. In alarm mode, hold the SNOOZE button to set alarm.
3. Press the ARROW buttons (back) to adjust a value.
4. Press the SNOOZE button to confirm and move to next item.

Settings order:
1. Hour
2. Minutes

Alarm Icon

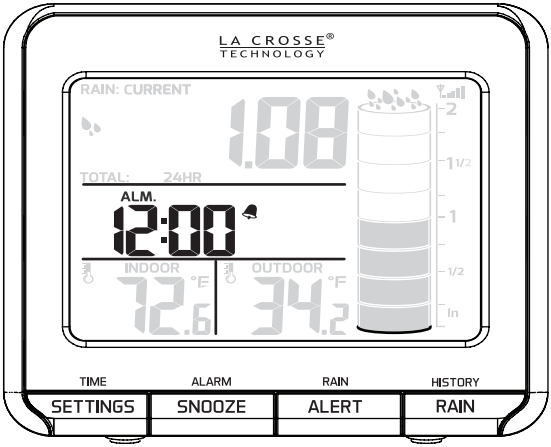

Activate/Deactivate Time Alarm

The alarm automatically activates when you set the alarm time.
To activate or deactive the alarm at any time:

- Press the SNOOZE button to enter alarm mode.
- Press and release the SNOOZE button to activate and deactive the time alarm.
- The alarm bell icon will show when active.

Snooze

- When the alarm sounds, press the SNOOZE button to silence the alarm for 10 minutes.
- The snooze function may be repeated.
- Hold the SNOOZE to exit snooze mode.
- Press any other button to stop the alarm for one day.

Search for Rain Sensor

- Hold the RAIN button for three seconds.
- The rain reception icon will flash while searching for the sensor.
- The reception icon will be solid when connected to rain sensor.

Search for Temperature Sensor

- Hold the DOWN arrow button for three seconds.
- The temperature area will flash dashes.
- Temperature reading = connected.

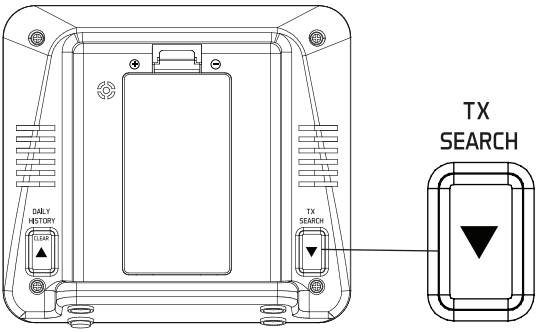

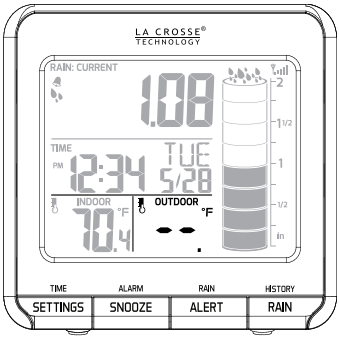

Position Rain Sensor TX23R

1. Mount in an open area for a more accurate rain count.
2. Install the Rain sensor on a level platform that is stationary.
3. Insert two mounting screws (not included) through the holes in the base of the rain sensor.
4. Ideally, the Rain sensor should be mounted at least 6 ft in the air and have a direct line of sight to the display.
5. The rain sensor should be accessible to allow for periodic cleaning of debris or insects.
6. The maximum wireless transmission range to the rain station is over 300 feet (91 meters) in open air, not including walls or floors.

Position Temperature Sensor TX23T

1. Mount the Outdoor Sensor on a north-facing wall or in any well shaded area. Under an eave or deck rail is preferred.
2. Insert one mounting screw (not included) through the hole at the top of the outdoor sensor.
3. The maximum wireless transmission range to the rain station is over 300 feet (91 meters) in open air, not including walls or floors.
4. Be sure the outdoor sensor is mounted vertically.

Specifications

Indoor	Temperature Range: +14°F to 140°F (-10°C to 60°C)
Outdoor	Temperature Range: -40°F to 140°F (-40°C to 60°C) Distance: Over 330ft. (100 meters) RF 915MHz (open air)
Rain	Up to 99.99 inches (999.9 mm) Distance: Over 330ft. (100 meters) RF 915MHz (open air)
Batteries (not included)	RainStation: 2-AA, IEC, LR6 batteries Rain Sensor: 2-AA, IEC, LR6 batteries Temperature Sensor: 2-AA, IEC, LR6 batteries
Battery Life	Over 12 months when using reputable batteries
Dimensions	Rain Station: 4.27” L x 1.48” W x 3.88” H (108 x 38 x 99 mm) TX23R Sensor: 6.00” L x 5.10” W x 4.21” H (152 x 130 x 107mm) TX23T Sensor: 1.67” L x 0.79” W x 6.1” H (42.5 x 20 x 155 mm)

Care and Maintenance

- Do not mix old and new batteries
- Do not mix Alkaline, Standard, Lithium or Rechargeable Batteries.
- Always purchase the correct size and grade of battery most suitable for intended use.
- Replace all batteries of a set at the same time.
- Clean the battery contacts and also those of the device prior to battery installation.
- Ensure the batteries are installed with correct polarity (+and -).
- Remove batteries from equipment which is not to be used for an extended period.
- Remove expired batteries promptly.

Warranty and Support

La Crosse Technology, Ltd. provides a 1-year limited time warranty (from date of purchase) on this product relating to manufacturing defects in materials & workmanship.

Before returning a product, please contact our friendly customer support with questions or visit our online help:

Phone: 1-608-782-1610

Online Product Support:
www.lacrossetechnology.com/support

Product Registration:
www.lacrossetechnology.com/support/register

View full warranty details online at:
www.lacrossetechnology.com/warranty_info.pdf

Warranty Address:
La Crosse Technology, Ltd
2830 S. 26th St.
La Crosse, WI 54601

Protected under U.S. Patents:
5,978,738 | 6,076,044 |RE43903

FCC Statement

This equipment has been tested and found to comply with the limits for a Class B digital device, pursuant to part 15 of the FCC Rules. These limits are designed to provide reasonable protection against harmful interference in a residential installation. This equipment generates, uses and can radiate radio frequency energy and, if not installed and used in accordance with the instructions, may cause harmful interference to radio communications. However, there is no guarantee that interference will not occur in a particular installation. If this equipment does cause harmful interference to radio or television reception, which can be determined by turning the equipment off and on, the user is encouraged to try to correct the interference by one or more of the following measures:

- Reorient or relocate the receiving antenna.
- Increase the separation between the equipment and receiver.
- Connect the equipment into an outlet on a circuit different from that to which the receiver is connected.
- Consult the dealer or an experienced radio/TV technician for help.

This device must not be co-located or operating in conjunction with any other antenna or transmitter.

Operation is subject to the following two conditions:

(1) This device may not cause harmful interference, and

(2) This device must accept any interference received, including interference that may cause undesired operation.

Caution!

The manufacturer is not responsible for any radio or TV interference caused by unauthorized modifications to this equipment. Such modifications could void the user authority to operate the equipment.

All rights reserved. This manual may not be reproduced in any form, even in part, or duplicated or processed using electronic, mechanical or chemical process without the written permission of the publisher.

This booklet may contain errors or misprints. The information it contains is regularly checked and corrections are included in subsequent editions. We disclaim any responsibility for any technical error or printing error, or their consequences.

All trademarks and patents are recognized.

Canada Statement

This device complies with Industry Canada’s licence-exempt RSSs. Operation is subject to the following two conditions:(1) This device may not cause interference; and(2) This device must accept any interference, including interference that may cause undesired operation of the device.

Cet appareil est conforme aux CNR exemptes de licence d'Industrie Canada. Son fonctionnement est soumis aux deux conditions suivantes:(1) Ce dispositif ne peut causer d'interférences; et(2) Ce dispositif doit accepter toute interférence, ycompris les interférences qui peuvent causerun mauvais fonctionnement de l'appareil.