ELECTRONIC TECHNOLOGY SYSTEMS
DR. GENZ GMBH

TEST - REPORT

SAR Compliance Test Report

Test report no.:

G5M203060118-S-8

SAR

ELECTRONIC TECHNOLOGY SYSTEMS
DR. GENZ GMBH
STORKOWER STRASSE 38C, D-15526 REICHENWALDE B. BERLIN
PHONE +49-33631-888 00
FAX +49-33631-888 660

TABLE OF CONTENTS

1 General information

1.1 Notes
1.2 Testing laboratory
1.3 Details of approval holder
1.4 Manufacturer
1.5 Application details
1.6 Test item
1.7 Test results
1.8 Test standards

2 Technical test

2.1 Summary of test results
2.2 Test environment
2.3 Test equipment utilized
2.4 Definitions
2.5 Measurement system description
2.6 Test system specification
2.7 Measurement procedure
2.8 Reference positions for handheld radio transmitters
2.9 Measurement uncertainty

3 Tissue and system verification

3.1 Tissue verification
3.2 System verification

4 Test Results

5 References

6 Appendix

1 General Information

1.1 Notes

The purpose of conformity testing is to increase the probability of adherence to the essential requirements or conformity specifications, as appropriate.
The complexity of the technical specifications, however, means that full and thorough testing is impractical for both technical and economic reasons.
Furthermore, there is no guarantee that a test sample which has passed all the relevant tests conforms to a specification.
The existence of the tests nevertheless provides the confidence that the test sample possesses the qualities as maintained and that is performance generally conforms to representative cases of communications equipment.

The test results of this test report relate exclusively to the item tested as specified in 1.5.
The test report may only be reproduced or published in full.
Reproduction or publication of extracts from the report requires the prior written approval of the ELECTRONIC TECHNOLOGY SYSTEMS DR. GENZ GMBH.

I attest to the accuracy of data. All measurements reported herein were performed by me or were made under my supervision and are correct to the best of my knowledge and belief. I assume full responsibility for the completeness of these measurements and vouch for the qualification of all persons taking them.

Tester:

Date	ETS-Lab.	Name	Signature
23.10.2003		N. Kaspar	Norbert Kaspar

Technical responsibility for area of testing:

Date	ETS	Name	Signature
23.10.2003		Dr. Genz	i.A.

1.2 Testing laboratory

1.2.1 Location

ELECTRONIC TECHNOLOGY SYSTEM DR. GENZ GMBH (ETS)
Storkower Straße 38c
D-15526 Reichenwalde b. Berlin
Germany
Telephone : +49 33631 888 00
Fax : +49 33631 888 660

1.2.2 Details of accreditation status

ACCREDITED TESTING LABORATORY
DAR-REGISTRATION NUMBER: TTI-P-G 126/96

FCC FILED TEST LABORATORY REG. NO. 96970

BLUETOOTH QUALIFICATION TEST FACILITY (BQTF)
ACCREDITED BY BLUETOOTH QUALIFICATION REVIEW BOARD

INDUSTRY CANADA FILED TEST LABORATORY REG. NO. IC 3470

A2LA ACCREDITED Certificate Number 1983-01

1.3 Details of approval holder

Name	: Airtech I & C Co., Ltd.
Street	: zip 421-809, #101-807, Techno ParkComplex, 364, Samjung-dong
Town	: Ojung-Gu, Bucheon-si, Kyeonggi-Do
Country	: Korea
Telephone	: +82-32-234-2345
Fax	: +82-32-234-2350
Contact	: Mr. John Kim
E-Mail	: sales1@airtech21.com

1.4 **Manufacturer**: (if applicable)

Name	:
Street	:
Town	:
Country	:

1.5 Application details

Date of receipt of application : 23.06.2003
Date of receipt of test item : 23.06.2003
Date of test : 26.09.2003

1.6 Test item

FCC ID : ONKATP-100

Description of test item : VHF Transceiver

Type identification : ATP-100

Serial number : without; Identical prototype

Device category : PCF (Licensed Portable Transmitter Held To Face)

Technical data

TX Frequency range : 136.025 - 173.975 MHz

RX Frequency range : 136.025 - 173.975 MHz

Max. Conducted RF output power : 36,95 dBm (4,955 W)

Power supply : 7,5 V DC

Antenna Tx : external

Antenna RX : external

Antenna type : Helical Antenna

Additional information : Tx and Rx. antenna are the same.

1.7 Test Results

Max. SAR Measurement : 1.90 W/kg (averaged over 1 gram)

This EUT has been shown to be capable of compliance for localized specific absorption rate (SAR) for uncontrolled environment/general population exposure limits specified in ANSI/IEEE Std. C95.1-1992 and had been tested in accordance with the measurement procedures specified in FCC/OET Bulletin 65 Supplement C (2001) and IEEE Std. 1528-200X (Draft 6.5, January 2002).

1.8 Test standards

Standards : - IEEE Std. 1528-200X (Draft 6.5, January 2002)

FCC Rule Part(s) : - FCC OET Bulletin 65, Supplement C, Edition 01-01

2 Technical test

2.1 Summary of test results

Classification

Uncontrolled environment/general population	
Controlled exposure/occupational environment	X

Applicable Configuration

Handset (Head)	
Handset (Held to face)	X
Handset (Body)	
Headset (Head)	
Body Worn Equipment	X

EUT complies with the RF radiation exposure limits of the FCC as shown by the SAR measurement results. These measurements are taken to simulate the RF effects exposure under worst-case conditions. The EUT complies with the requirements in respect to all parameters subject to the test. The test results and statements relate only to the item(s) tested.

Please note that the absorption and distribution of electromagnetic energy in the body are very complex phenomena that depend on the mass, shape, and size of the body, the orientation of the body with respect to the field vectors, and the electrical properties of both the body and the environment. Other variables that may play a substantial role in possible biological effects are those that characterize the environment (e.g. ambient temperature, air velocity, relative humidity, and body insulation) and those that characterize the individual (e.g. age, gender, activity level, debilitation, or disease). Because innumerable factors may interact to determine the specific biological outcome of an exposure to electromagnetic fields, any protection guide shall consider maximal amplification of biological effects as a result of field-body interactions, environmental conditions, and physiological variables. [1]

2.2 Test environment

Room temperature : 22,0 -22,4 ^{o}C

Liquid temperature : 22,0 -22,2 ^{o}C

Relative humidity content : 20 ... 75 %

Air pressure : 86 ... 103 k P a

Details of power supply : 7,5 V DC

2.3 Test equipment utilized

No.	Measurement device:	Type:	Manufacturer:
ETS 0449	Stäubli Robot	RX90B L	Stäubli
ETS 0450	Stäubli Robot Controller	CS/MBs&p	Stäubli
ETS 0451	DASY 4 Measurement Server		Schmid & Partner
ETS 0452	Control Pendant		Stäubli
ETS 0453	Compaq Computer	Pentium IV, 2 GHz,	Schmid & Partner
ETS 0454	Dabu Acquisition Electronics	DAE3V1	Schmid & Partner
ETS 0455	Dummy Probe		Schmid & Partner
ETS 0456	Dosimetric E-Field Probe	ET3DV6	Schmid & Partner
ETS 0457	Dosimetric E-Field Probe	ET3DV6	Schmid & Partner
ETS 0458	Dosimetric H-Field Probe	H3DV6	Schmid & Partner
ETS 0459	System Validation Kit	D900V2	Schmid & Partner
ETS 0460	System Validation Kit	D1800V2	Schmid & Partner
ETS 0461	System Validation Kit	D1900V2	Schmid & Partner
ETS 0462	System Validation Kit	D2450V2	Schmid & Partner
ETS 0463	Probe Alignment Unit	LBV2	Schmid & Partner
ETS 0464	SAM Twin phantom	V 4.0	Schmid & Partner
ETS 0465	Mounting Device	V 3.1	Schmid & Partner
ETS 0224a	Millivoltmeter	URV 5	Rohde & Schwarz
ETS 0219	Power sensor	NRV-Z2	Rohde & Schwarz
ETS 0268	RF signal generator	SMP 02	Rohde & Schwarz
ETS 0322	Insertion unit	URV5-Z4	Rohde & Schwarz
ETS 0466	Directional Coupler	HP 87300B	HP
ETS0231	Radio Communication Tester	CMD65	Rohde & Schwarz
ETS 0467	Universal Radio Communication Tester	CMU 200	Rohde & Schwarz
ETS 0468	Network Analyzer 300 kHz to 3 GHz	8753C	Agilent
ETS 0480	Validation Dipole	DB 3	EMCO

2.4 Definitions

2.4.1 SAR

The specific absorption rate (SAR) is defined as the time derivative of the incremental energy (*dW*) absorbed by (dissipated in) an incremental mass (*dm*) contained in a volume element *(dV)* of a given density (ρ_t), expressed in watts per kilogram (W/kg)

SAR = $$\frac{d}{dt}\left(\frac{dW}{dm}\right)=\frac{d}{dt}\left(\frac{dW}{\rho_t dV}\right)=\frac{\sigma}{\rho_t}\left|E_t\right|^2$$

where:

$$\frac{dW}{dt}=\int_v E\cdot J\,dV=\int_v \sigma E^2 dV$$

2.4.2 Uncontrolled Exposure

The general population/uncontrolled exposure limits are applicable to situations in which the general public may be exposed or in which persons who are exposed as a consequence of their employment may not be made fully aware of the potential for exposure or cannot exercise control over their exposure. Members of the general public would come under this category when exposure is not employment-related; for example, in the case of a wireless transmitter that exposes persons in its vicinity. Warning labels placed on low-power consumer devices such as cellular telephones are not considered sufficient to allow the device to be considered under the occupational/controlled category, and the general population/uncontrolled exposure limits apply to these devices. [2]

2.4.3 Controlled Exposure

In general, occupational/controlled exposure limits are applicable to situations in which persons are exposed as a consequence of their employment, who have been made fully aware of the potential for exposure and can exercise control over their exposure. This exposure category is also applicable when the exposure is of a transient nature due to incidental passage through a location where the exposure levels may be higher than the general population/uncontrolled limits, but the exposed person is fully aware of the potential for exposure and can exercise control over his or her exposure by leaving the area or by some other appropriate means. Awareness of the potential for RF exposure in a workplace or similar environment can be provided through specific training as part of a RF safety program. If appropriate, warning signs and labels can also be used to establish such awareness by providing prominent information on the risk of potential exposure and instructions on the risk of potential exposure and instructions on methods to minimize such exposure risks. [2]
Push-to-talk applications (PTT) operating in front of a person's face and certain body worn configurations as occupational/controlled exposure. The consideration of a 50 % duty factor for PTT simplex radio-caring typical voice traffic is possible.

2.5 Measurement System Description

2.5.1 System Setup

Measurements are performed using the DASY4 automated dosimetric assessment system (figure 1) made by Schmid & Partner Engineering AG (SPEAG)in Zurich, Switzerland.

Figure 1

The DASY4 system for performing compliance tests consists of the following items:

- A standard high precision 6-axis robot (Stäubli RX family) with controller, teach pendant and software. An arm extension for accommodating the data acquisition electronics (DAE).
- A dosimetric probe, i.e., an isotropic E-field probe optimized and calibrated for usage in tissue simulating liquid. The probe is equipped with an optical surface detector system.
- A data acquisition electronics (DAE) which performs the signal amplification, signal multiplexing, AD-conversion, offset measurements, mechanical surface detection, collision detection, etc. The unit is battery powered with standard or rechargeable batteries. The signal is optically transmitted to the EOC.
- An unit to operate the optical surface detector which is connected to the EOC.
- The Electro-optical converter (EOC) performs the conversion from the optical into a digital electric signal of the DAE. The EOC is connected to the measurement server.
- The functions of the measurement server is to perform the time critical task such as signal filtering, surveillance of the robot operation, fast movement interrupts.
- A probe alignment unit which improves the (absolute) accuracy of the probe positioning.
- A computer operating Windows 2000 or Windows NT.
- DASY4 software.
- Remote control with teach pendant and additional circuitry for robot safety such as warning lamps, etc.
- The SAM twin phantom enabling testing left-hand and right-hand usage.
- The device holder for handheld mobile phones.
- Tissue simulating liquid mixed according to the given recipes (see Application Notes).
- System validation dipoles allowing to validate the proper functioning of the system.

2.5.2 Phantom Description

(figure 2.1)

The SAM twin phantom V4.0 (figure 2.1) is a fiberglass shell phantom with 2 mm shell thickness. It has three measurement areas:

- Left hand
- Right hand
- Flat phantom

(figure 2.2)

The FLATPHANTOM V4 (figure 2.2) is a phantom for dosimetric evaluations of body mounted usage and system performance check for the frequency range 300MHz - 3 GHz.

The phantoms are integrated in a wooden table.

The bottom plate of the table contains three pair of bolts for locking the device holder. The device holder positions are adjusted to the standard measurement positions in the three sections. Only one device holder is necessary if two phantoms are used (e.g., for different liquids).

A cover is provided to tap the phantom during off-periods to prevent water evaporation and changes in the liquid parameters. Free space scans of devices on the cover are possible.

On the phantoms top, three reference markers are provided to identify the phantom positions with respect to the robot.

2.5.3 Tissue Simulating Liquids

The parameters of the tissue simulating liquid strongly influence the SAR. The parameters for the different frequencies are defined in the corresponding compliance standards (e.g., EN 50361, IEEE P1528-200X).

Tissue dielectric properties

	Head		Body	
Frequency (MHz)	**Relative Dielectric Constant (ε_r)**	**Conductivity (σ) (S/m)**	**Relative Dielectric Constant (ε_r)**	**Conductivity (σ) (S/m)**
150	52.3	0.76	61.9	0.80
300	45.3	0.87	58.2	0.92
450	43.5	0.87	56.7	0.94
835	41.5	0.90	55.2	0.97
900	41.5	0.97	55.0	1.05
1450	40.5	1.20	54.0	1.30
1800	40.0	1.40	53.3	1.52
1900	40.0	1.40	53.3	1.52
2000	40.0	1.40	53.3	1.52
2450	39.2	1.80	52.7	1.95
3000	38.5	2.40	52.0	2.73

2.5.4 Device Holder

The DASY device holder (figure 3.1) is designed to cope with different positions given in the standard. It has two scales for the device rotation (with respect to the body axis) and the device inclination (with respect to the line between the ear openings). The rotation centers for both scales is the ear opening. Thus the device needs no repositioning when changing the angles.

Figure 3.1

The DASY device holder has been made out of low-loss POM material having the following dielectric parameters: relative permittivity $\varepsilon = 3$ and loss tangent $\delta = 0.02$. The amount of dielectric material has been reduced in the closest vicinity of the device, since measurements have suggested that the influence of the clamp on the test results could thus be lowered.

2.5.5 Probes

The SAR measurements were conducted with the dosimetric probe ET3DV6 (figure 4), designed in the classical triangular configuration and optimized for dosimetric evaluation. [3] The probe is constructed using the thick film technique; with printed resistive lines on ceramic substrates. The probe is equipped with an optical multifiber line ending at the front of the probe tip. It is connected to the EOC box on the robot arm and provides an automatic detection of the phantom surface. Half of the fibers are connected to a pulsed infrared transmitter, the other half to a synchronized receiver. As the probe approaches the surface, the reflection from the surface produces a coupling from the transmitting to the receiving fibers. This reflection increases first during the approach, reaches maximum and then decreases. If the probe is flatly touching the surface, the coupling is zero. The distance of the coupling maximum to the surface is independent of the surface reflectivity and largely independent of the surface to probe angle. The DASY4 software reads the reflection during a software approach and looks for the maximum using a 2nd order fitting. The approach is stopped at reaching the maximum.

Figure 4

Probe Specifications

Calibration:	In air from 10 MHz to 2.5 GHz In brain and muscle simulating tissue at Frequencies of 150 MHz, 300 MHz, 450 MHz, 835 MHz, 900 MHz, 1800 MHz, 1900 MHz and 2450 MHz Calibration certificates please find attached.
Frequency:	10 MHz to > 3 GHz; Linearity: ± 0.2 dB (30 MHz to 3 GHz)
Directivity:	± 0.2 dB in HSL (rotation around probe axis) ± 0.4 dB in HSL (rotation normal probe axis)
Dynamic Range:	5 µW/g to > 100 mW/g;
Linearity:	± 0.2 dB
Dimensions:	Overall length: 330 m Tip length: 16 mm Body diameter: 12 mm Tip diameter: 6.8 mm Distance from probe tip to dipole centers: 2.7 mm
Application:	General dosimetry up to 3 GHz Compliance tests of mobile phones Fast automatic scanning in arbitrary phantoms

2.6 Test System Specification

Positioner

Robot:	Stäubli Animation Corp. Robot Model: RX90B L
Repeatability:	0.02 mm
No. of axis:	6

Data Acquisition Electronic (DAE) System

Cell Controller

Processor:	Pentium IV
Clock Speed:	2.0 GHz
Operating System:	Windows 2000
Data Card:	DASY4 PC-Board
Data Converter	
Features:	Signal Amplifier, multiplexer, A/D converter, & control logic
Software:	DASY4 software
Connecting Lines:	Optical downlink for data and status info. Optical uplink for commands and clock

PC Interface Card

Function:	24 bit (64 MHz) DSP for real time processing Link to DAE3 16 bit A/D converter for surface detection system serial link to robot direct emergency stop output for robot

E-Field Probes

Model:	ET3DV6 SN1711
Construction:	Triangular core fiber optic detection system
Frequency:	10 MHz to 6 GHz
Linearity:	± 0.2 dB (30MHz to 3 GHz)

Phantom

Phantom:	SAM Twin Phantom (V4.0)
Shell Material:	Fiberglass
Thickness:	2.0 ± 0.2 mm

Phantom

Phantom:	Flat Phantom (V4.4)
Shell Material:	Fiberglass
Thickness:	6 mm ± 0.2 mm

2.7 Measurement Procedure

The evaluation was performed using the following procedure:

1. The SAR measurement was taken at a selected spatial reference point to monitor power variations during testing. This fixed location point was measured and used as a reference value.
2. The SAR distribution at the exposed side of the head was measured at a distance of 3.9mm from the inner surface of the shell. The area covered the entire dimension of the head and the horizontal grid spacing was 10mm x 10mm.
3. Based on the area scan data, the area of the maximum absorption was determined by spline interpolation. Around this point, a volume of 30mm x 30mm x 30mm (fine resolution volume scan, zoom scan) was assessed by measuring 5 x 5 x 5 points. On this basis of this data set, the spatial peak SAR value was evaluated with the following procedure:
   a. The data at the surface was extrapolated, since the center of the dipoles is 2.7mm away from the tip of the probe and the distance between the surface and the lowest measuring point is 1.2mm. The extrapolation was based on a least square algorithm [4]. A polynomial of the fourth order was calculated through the points in z-axes. This polynomial was then used to evaluate the points between the surface and the probe tip.
   b. The maximum interpolated value was searched with a straight-forward algorithm. Around this maximum the SAR values averaged over the spatial volumes (1g or 10g) were computed using the 3D-Spline interpolation algorithm. The 3D-spline is composed of three one-dimensional splines with the “Not a knot” condition (in x, y, and z directions) [4] [5]. The volume was integrated with the trapezoidal algorithm. One thousand points (10 x 10 x 10) were interpolated to calculate the average.
   c. All neighboring volumes were evaluated until no neighboring volume with a higher average value was found.
4. The SAR reference value, at the same location as procedure #1, was remeasured. If the value changed by more than 5%, the evaluation is repeated.

2.8 Reference Positions for Handheld Radio Transmitters

In general handheld radio transmitters like PMR/SMR devices are used in held to face position or with a speaker/microphone combination as body-worn configuration.

2.8.1 Held to face position

For held to face position the flat section of a SAM Phantom or a flat phantom is used.
The center of the radiating structure is to set on the middle position of the flat phantom. The distance between sample and flat phantom is 2.5 cm, similar to the real using.
For the measurement head tissue simulating liquid is used.

2.8.2 Belt Clip/Holster Configuration

Test configurations for body-worn operated EUTs are carried out while the belt-clip and/or holster is attached to the EUT and placed against a flat phantom in a regular configuration . An EUT with a headset output is tested with a headset connected to the device.
Body dielectric parameters are used.
There are two categories for accessories for body-worn operation configurations:

1. accessories not containing metallic components
2. accessories containing metallic components.

When the EUT is equipped with accessories not containing metallic components the tests are done with the accessory that dictates the closest spacing to the body. For accessories containing metallic parts a test with each one is implemented. If the multiple accessories share an identical metallic component (e.g. the same metallic belt-clip used with different holsters with no other metallic components) only the accessory that has the closest spacing to the body is tested.
In case that a EUT authorized to be body-worn is not supplied or has no options to be operated with any accessories, a test configuration where a separation distance between the back of the device and the flat phantom is used. All test position spacings are documented.
Transmitters operating in front of a person's face (e.g. push-to-talk configurations) are tested for SAR compliance with the front of the device positioned to face the flat platform. SAR Compliance tests for shoulder, waist or chest-worn transmitters are carried out with the accessories including headsets and microphones attached to the device and placed against a flat phantom in a regular configuration.
The SAR measurements are performed to investigate the worst-case positioning. This is documented and used to perform Body SAR testing. [2]. Body tissue simulating liquid is used.

2.9 Measurement uncertainty

The uncertainty budget has been determined for the DASY4 system performance check according to IEEE Str. 1528-200X, (draft), April 2002.

	Tol.	Prob.	Div.	$(^{c}i)^{1}$	Std. unc.	$(^{v}i)^{2}$
Error Description	(± %)	dist.		(1g)	(1g) (± %)	
Measurement System						
Probe Calibration	4.4	N	1	1	4.4	∞
Axial Isotropy	4.7	R	$\sqrt{3}$	1	2.7	∞
Hemispherical Isotropy	0	R	$\sqrt{3}$	1	0	∞
Boundary Effects	8.3	R	$\sqrt{3}$	1	4.8	∞
Linearity	4.7	R	$\sqrt{3}$	1	2.7	∞
System Detection Limit	1.0	R	$\sqrt{3}$	1	0.6	∞
Readout Electronics	1.0	N	1	1	1.0	∞
Response Time	0	R	$\sqrt{3}$	1	0	∞
Integration Time	0	R	$\sqrt{3}$	1	0	∞
RF Ambient Conditions	3.0	R	$\sqrt{3}$	1	1.7	∞
Probe Positioner	0.4	R	$\sqrt{3}$	1	0.2	∞
Probe Positioning	2.9	R	$\sqrt{3}$	1	1.7	∞
Algorithms for Max. SAR Eval.	3.9	R	$\sqrt{3}$	1	2.3	∞
Dipole						
Dipole Axis to Liquid Distance	1.0	R	$\sqrt{3}$	1	0.6	∞
Power Drift	4.7	R	$\sqrt{3}$	1	2.7	∞
Phantom and Tissue Param.						
Phantom Uncertainty	4.0	R	$\sqrt{3}$	1	2.3	∞
Liquid Conductivity (target)	5.0	R.	$\sqrt{3}$	0.6	1.7	∞
Liquid Conductivity (meas.)	10.0	R	$\sqrt{3}$	0.6	3.5	∞
Liquid Permittivity (target)	5.0	R	$\sqrt{3}$	0.6	1.7	∞
Liquid Permittivity (meas.)	5.0	R	$\sqrt{3}$	0.6	1.7	∞
Combined Standard Uncertainty					**10.2**	∞
Expanded Uncertainty kp=2						
Coverage Factor for 95%					**20.3**	

3. Tissue and System Verification

3.1 Tissue Verification

Dielectric parameters of the simulating liquids were verified using a Dielectric Probe Kit Agilent 85070D to a tolerance of ± 5 %.

Room Temperature: **22,0 -22,4 °C**

	Measured Tissue Parameters			
	300 MHz Head		150 MHz Head	
	Target	Measured	Target	Measured
Date		**11.10.2003**		**11.10.2003**
Liquid Temperature: ° C		**22,3**		**22,3**
Dielectric Constant: ε	45,3	45,65	52,3	52,4
Conductivity: σ	0,87	0,86	0,76	0,77

Room Temperature: **22,0 -22,4 °C**

	Measured Tissue Parameters	
	150 MHz Muscle	
	Target	Measured
Date		**11.10.2003**
Liquid Temperature: ° C		**22,3**
Dielectric Constant: ε	61,9	62,1
Conductivity: σ	0,80	0,81

3.2 System Verification

Prior to the assessment, the system was verified by using a 300 MHz validation dipole.
Power level of 250mW was supplied to the dipole antenna placed under the flat section of SAM Phantom.

The system was verified to a tolerance of ± 10 %.

Liquid Temperature: 22,0 -22,2 **°C**
Room Temperature: 22,0 -22,4 **°C**
Liquid Depth: **>15.5 cm**

System Dipole Validation Target & Measurement					
Date	**System Validation Kit:**	**Liquid**	**Targeted SAR 1g (mW/g)**	**Measured SAR 1g (mW/g)**	**Deviation (%)**
11.10.2003	DB3 SN9709-1325	300 MHz Head	3,044	3,092	1,57

Comment: Please find attached the measurement plots.

4. Test Results

Procedures Used To Establish Test Signal

The EUT was placed into simulated call mode (e.g. AMPS, Cellular CDMA & PCS CDMA modes) using manufacturers test codes. Such test signals offer a consistent means for testing SAR and are recommended for evaluating SAR [2]. The actual transmission is activated through a base station simulator or similar when test modes are not available or inappropriate for testing the EUT.

The EUT is rechargeable battery operated. The battery used for the SAR measurements was completely charged. The device was tested at full power verified by implementing conducted output power measurements. For confirming of the output power it was tested before and after each SAR measurement. The test was repeated if a conducted power deviation of more than 5 % occurred.

Mixture Type: **150 MHz Head**
Date: **11.10.2003**
Liquid Temperature: **22,0 -22,2 ^{o}C** **Room Temperature: 22,0 -22,4 ^{o}C**

Frequency			Power Drift dBm	Antenna Pos.	Phantom Section	Test Position -25 mm	SAR (W/kg) 1g	
							Measured SAR values	
MHz	Channel	Modulation					100% Duty Cycle	50 % Duty Cycle
136,025	Low	CW	0.08	Fixed	Flat	Front	**1.38**	**0,69**
155,025	Middle	CW	0.02	Fixed	Flat	Front	1.30	0,65
173,975	High	CW	0.12	Fixed	Flat	Front	1.25	0,62

1. The SAR values found were below the maximum limit of 8.0 w/kg (controlled exposure):
2. The highest face-held SAR value found was 0,69 W/kg (50 % duty cycle)
3. The EUT was tested for face-held SAR with a 2.5 cm separation distance between the front of the EUT and the outer surface of the planar phantom.

Mixture Type: **150 MHz Muscle**
Date: **11.10.2003**
Liquid Temperature: **22,0 -22,2 ° C** **Room Temperature: 22,0 -22,4 ° C**

Frequency			Power Drift dBm	Antenna Pos.	Phantom Section	Test Position -10 mm	SAR (W/kg) 1g	
							Measured SAR values	
MHz	Channel	Modulation					100% Duty Cycle	50 % Duty Cycle
136,025	Low	CW	-0.09	Fixed	Flat	Back	**1.90**	**0,95**
155,025	Middle	CW	-0.05	Fixed	Flat	Back	1.81	0,90
173,975	High	CW	-0.04	Fixed	Flat	Back	1.78	0,89

1. The SAR values found were below the maximum limit of 8.0 w/kg (controlled exposure):
2. The highest body-worn SAR value found was 0,95 W/kg (50 % duty cycle)
3. The EUT was tested for body-worn SAR with the attached belt-clip providing a 1.0 cm separation distance between the front of the EUT and the outer surface of the planar phantom.

Limits:

Exposure Limits	SAR (W/kg)	
	Uncontrolled Exposure/General Population Environment	Controlled Exposure/Occupational Environment
Spatial Average SAR (averaged over the whole body)	0.08	0.40
Spatial Peak SAR (averaged over any 1g of tissue)	1.60	8.00
Spatial Peak SAR (Hands, Feet, Ankles, Wrist) (averaged over any 10g of tissue)	4.00	20.00

Notes:
1. Test data represent the worst case SAR value and test procedure used are according to OET Bulletin 65, Supplement C (01-01).
2. All modes of operation were investigated.

5. References

[1] ANSI/IEEE C95.3 – 1991, *IEEE Recommended Practice for the Measurement of Potentially Hazardous Electromagnetic fields, 300 kHz to 100 GHz,* New York: IEEE, Aug. 1992

[2] Federal Communications Commission, OET Bulletin 65 (Edition 97-01), Supplement C (Edition 01-01), *Evaluating Compliance with FCC Guidelines for Human Exposure to Radiofrequency Electromagnetic Fields,* July 2001.

[3] T. Schmid, O. Egger, N. Kuster, *Automated E-field scanning system for dosimetric assessments,* IEEE Transaction on Microwave Theory and Techniques, vol. 44, Jan. 1996, pp. 105-113.

[4] W. Gander, *Computermathematics*, Birkhaeuser, Basel, 1992.

[5] W.H. Press, S.A. Teukolsky, W.T. Vetterling, and B.P. Flannery*, Numerical Recipes in C,* The Art of Scientific Computing, Second edition, Cambridge University Press, 1992.

[6] IEEE Standards Coordinating Committee 34 – IEEE Std. 1528-200X (Draft 6.1 – January 2002), *Draft Recommended Practice for Determining the Peak Spatial-Average Absorption Rate (SAR in the Human Body Due to Wireless Communications Devices: Experimental Techniques*.

[7] DASY4 *Dosimetric Assessment System Manual*; Draft; September 6, 2002; Schmid & Partner Engineering AG

6. Appendix

1.	Appendix A	Calibration Certificate	DB3 SN9709-1325 ET3DV6 SN1711 DAE3V1-522
2.	Appendix B	Measurement Plots	
3.	Appendix C	Pictures	

Appendix A

Calibration Certificate

ELECTRONIC TECHNOLOGY SYSTEMS DR. GENZ GMBH - ETS -
STORKOWER STRASSE 38c, D-15526 REICHENWALDE B. BERLIN Tel: 033631 888 00 FAX: 033631 888 660

D2: 300MHz SYSTEM VALIDATION DIPOLE

CALIBRATION CERTIFICATE

300 MHz System Validation Dipole (Head)

Type:	**3121C-DB3**
Serial Number:	**9709-1325**
Place of Calibration:	**Reichenwalde**
Date of Calibration:	**September 11, 2003**
Calibration Interval:	**24 month**

ETS Dr. Genz GmbH hereby certifies, that this device has been calibrated on the date indicated above. The calibration was performed in accordance with specifications and procedures of ETS Dr. Genz GmbH.

Wherever applicable, the standards used in the calibration process are traceable to International standards.

Calibrated by:	**W. Treffke**
Approved by:	**K. Damm**

ELECTRONIC TECHNOLOGY SYSTEMS DR. GENZ GMBH - ETS -
STORKOWER STRASSE 38c, D-15526 REICHENWALDE B. BERLIN Tel: 033631 888 00 FAX: 033631 888 660

DASY

DIPOLE VALIDATION KIT

Type: **3121-DB3**

Serial: **9709-1325**

Manufactured : September 18, 1997
Calibrated : September 11, 2003

Measurement Conditions

The measurements were performed in the flat section of the new SAM twin phantom filled with body simulating solution of the following electrical parameters at 300 MHz:

Relative permittivity	45,65	+/- 5 %
Conductivity	0,862 mho/m	+/- 10 %

The DASY System with a dosimetric E-field probe ET3DV6 (SN: 1711, conversion factor 7.7 at 300 MHz head) was used for the measurements.

The dipole feed-point was positioned below the center marking and oriented parallel to the body axis (the long side of the phantom). The standard measuring distance was 10 mm from dipole center to the solution surface. The included distance holder was used during measurements for accurate distance positioning.

The coarse grid with a grid spacing of 5 mm was aligned with the dipole. The 7x7x7 fine cube was chosen for cube integration.
The dipole input power (forward power) was 250 mW +/- 3 %. The results are normalized to 1 W input power.

SAR Measurement with DASY4 System

Standard SAR-measurements were performed according to the measurement conditions described in section 4. The results (see figure supplied) have been normalized to a dipole input power of 1 W (forward power). The resulting averaged SAR-values measured with the dosimetric probe ET3DV6 SN:1711 and applying the advanced extrapolation are:

Averaged over 1 cm3 (1 g) of tissue:	3,04 mW/g
Averaged over 10 cm3 (10 g) of tissue:	1,96 mW/g

Dipole impedance and return loss

The dipole was positioned at the flat phantom sections according to section 4 (Measurement conditions) (with head tissue inside the phantom) and the distance holder was in place during impedance measurements.

Feed-point impedance at 300 MHz:	Re {Z} = 54.3 Ω
	Im {Z} = -3.2 Ω
Return Loss at 300 MHz:	- 23.9 dB

Schmid & Partner
Engineering AG

Zeughausstrasse 43, 8004 Zurich, Switzerland, Phone +41 1 245 97 00, Fax +41 1 245 97 79

Calibration Certificate

Dosimetric E-Field Probe

Type:	**ET3DV6**
Serial Number:	**1711**
Place of Calibration:	**Zurich**
Date of Calibration:	**September 3, 2002**
Calibration Interval:	**12 months**

Schmid & Partner Engineering AG hereby certifies, that this device has been calibrated on the date indicated above. The calibration was performed in accordance with specifications and procedures of Schmid & Partner Engineering AG.

Wherever applicable, the standards used in the calibration process are traceable to international standards. In all other cases the standards of the Laboratory for EMF and Microwave Electronics at the Swiss Federal Institute of Technology (ETH) in Zurich, Switzerland have been applied.

Calibrated by:	D. Keller
Approved by:	Marie-Katja

Schmid & Partner
Engineering AG

Zeughausstrasse 43, 8004 Zurich, Switzerland, Telephone +41 1 245 97 00, Fax +41 1 245 97 79

Probe ET3DV6

SN:1711

Manufactured: August 7, 2002
Last calibration: September 3, 2002

Calibrated for DASY Systems

(Note: non-compatible with DASY2 system!)

DASY - Parameters of Probe: ET3DV6 SN:1711

Sensitivity in Free Space

NormX	**1.38**	$\mu V/(V/m)^2$
NormY	**1.60**	$\mu V/(V/m)^2$
NormZ	**1.53**	$\mu V/(V/m)^2$

Diode Compression

DCP X	**97**	mV
DCP Y	**97**	mV
DCP Z	**97**	mV

Sensitivity in Tissue Simulating Liquid

Head **900 MHz** ε_r **= 41.5 ± 5%** σ **= 0.97 ± 5% mho/m**

Head **835 MHz** ε_r **= 41.5 ± 5%** σ **= 0.90 ± 5% mho/m**

ConvF X	**6.4**	± 9.5% (k=2)	Boundary effect:	
ConvF Y	**6.4**	± 9.5% (k=2)	Alpha	**0.47**
ConvF Z	**6.4**	± 9.5% (k=2)	Depth	**2.17**

Head **1800 MHz** ε_r **= 40.0 ± 5%** σ **= 1.40 ± 5% mho/m**

Head **1900 MHz** ε_r **= 40.0 ± 5%** σ **= 1.40 ± 5% mho/m**

ConvF X	**5.3**	± 9.5% (k=2)	Boundary effect:	
ConvF Y	**5.3**	± 9.5% (k=2)	Alpha	**0.49**
ConvF Z	**5.3**	± 9.5% (k=2)	Depth	**2.52**

Boundary Effect

Head **900 MHz** **Typical SAR gradient: 5 % per mm**

Probe Tip to Boundary		**1 mm**	**2 mm**
SAR_{be} [%]	Without Correction Algorithm	9.6	5.3
SAR_{be} [%]	With Correction Algorithm	0.2	0.4

Head **1800 MHz** **Typical SAR gradient: 10 % per mm**

Probe Tip to Boundary		**1 mm**	**2 mm**
SAR_{be} [%]	Without Correction Algorithm	12.5	8.4
SAR_{be} [%]	With Correction Algorithm	0.2	0.2

Sensor Offset

Probe Tip to Sensor Center	**2.7**	mm
Optical Surface Detection	**1.3 ± 0.2**	mm

Receiving Pattern (ϕ), θ = 0°

f = 30 MHz, TEM cell ifi110

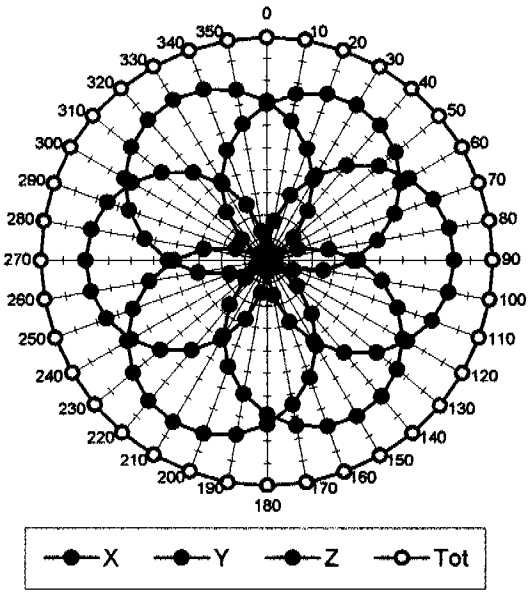

f = 100 MHz, TEM cell ifi110

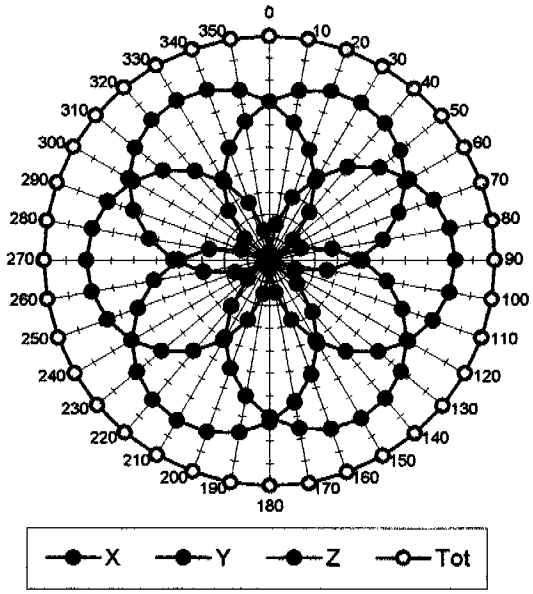

f = 300 MHz, TEM cell ifi110

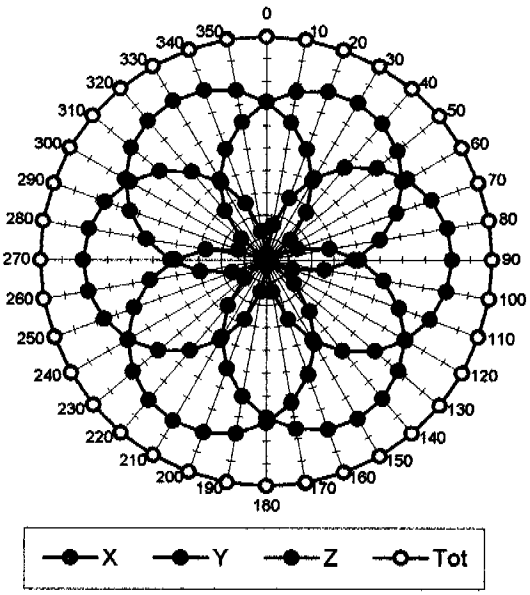

f = 900 MHz, TEM cell ifi110

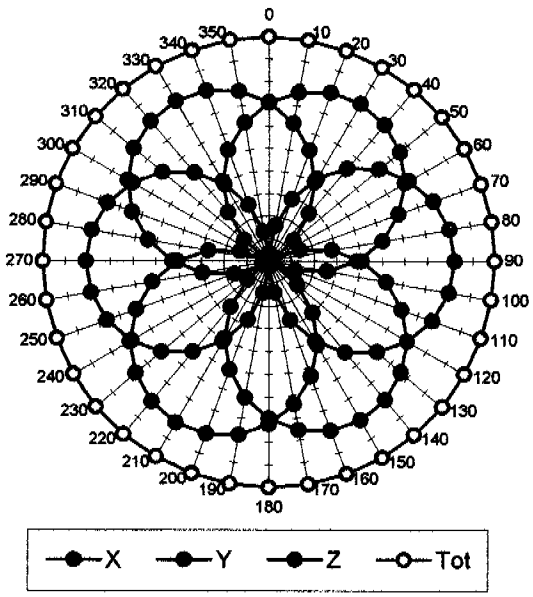

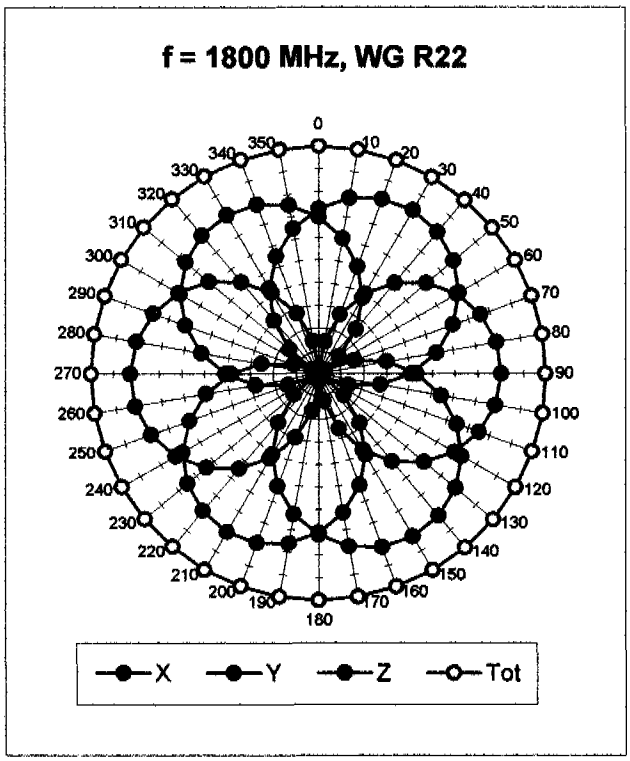

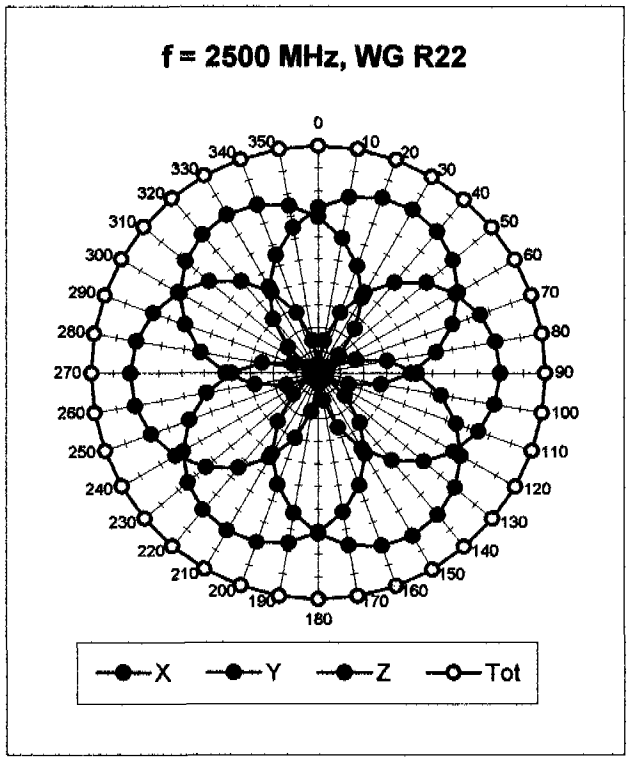

Isotropy Error (ϕ), θ = 0°

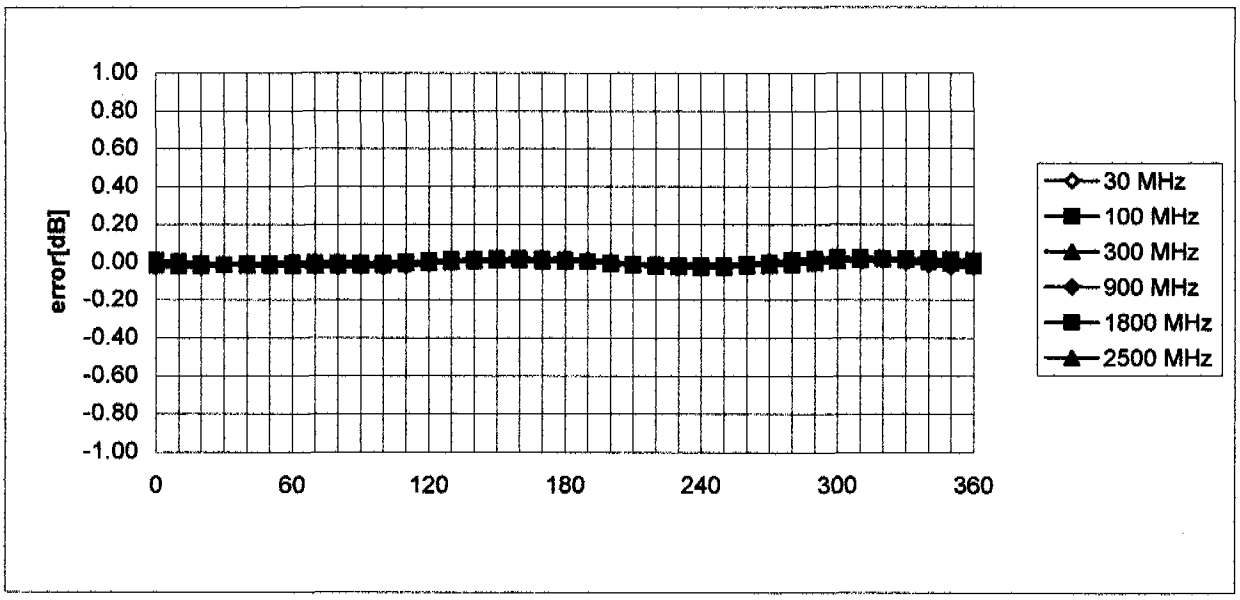

Frequency Response of E-Field

(TEM-Cell:ifi110, Waveguide R22)

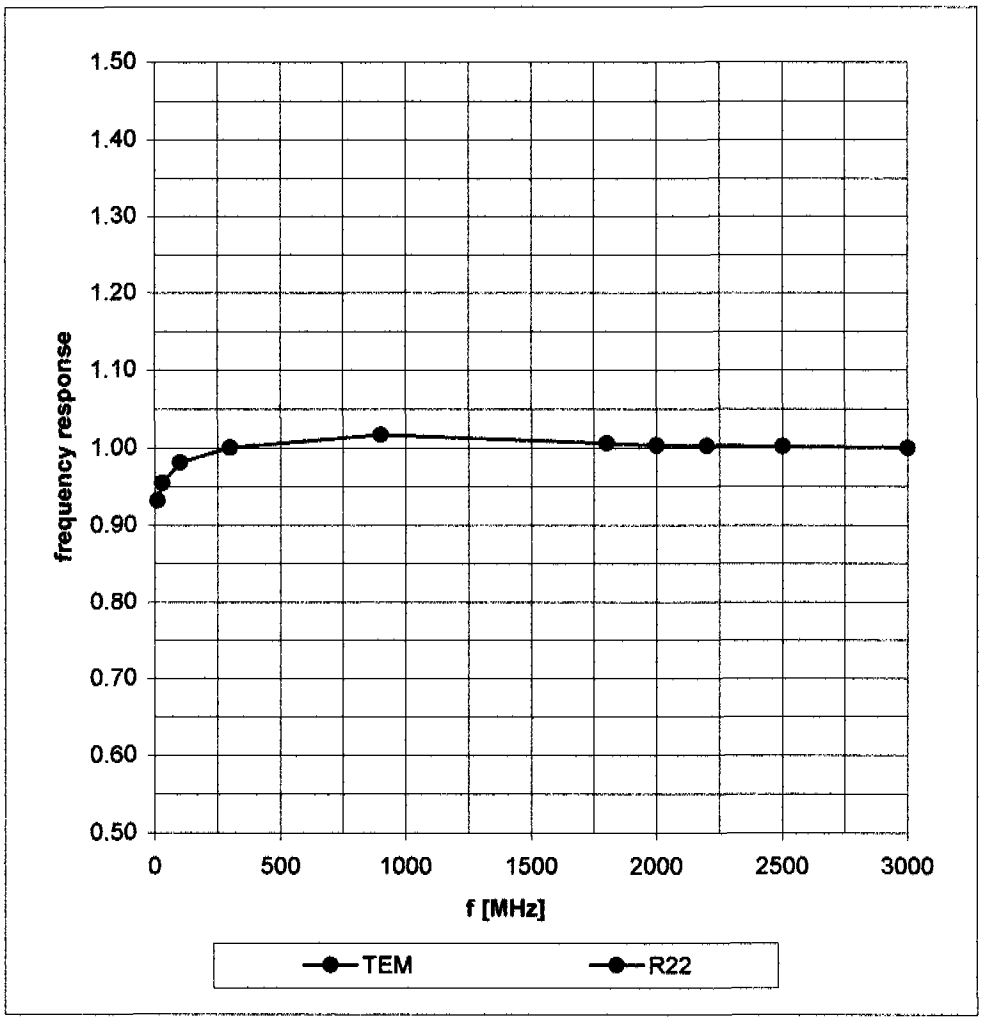

Dynamic Range f(SAR_{brain})

(Waveguide R22)

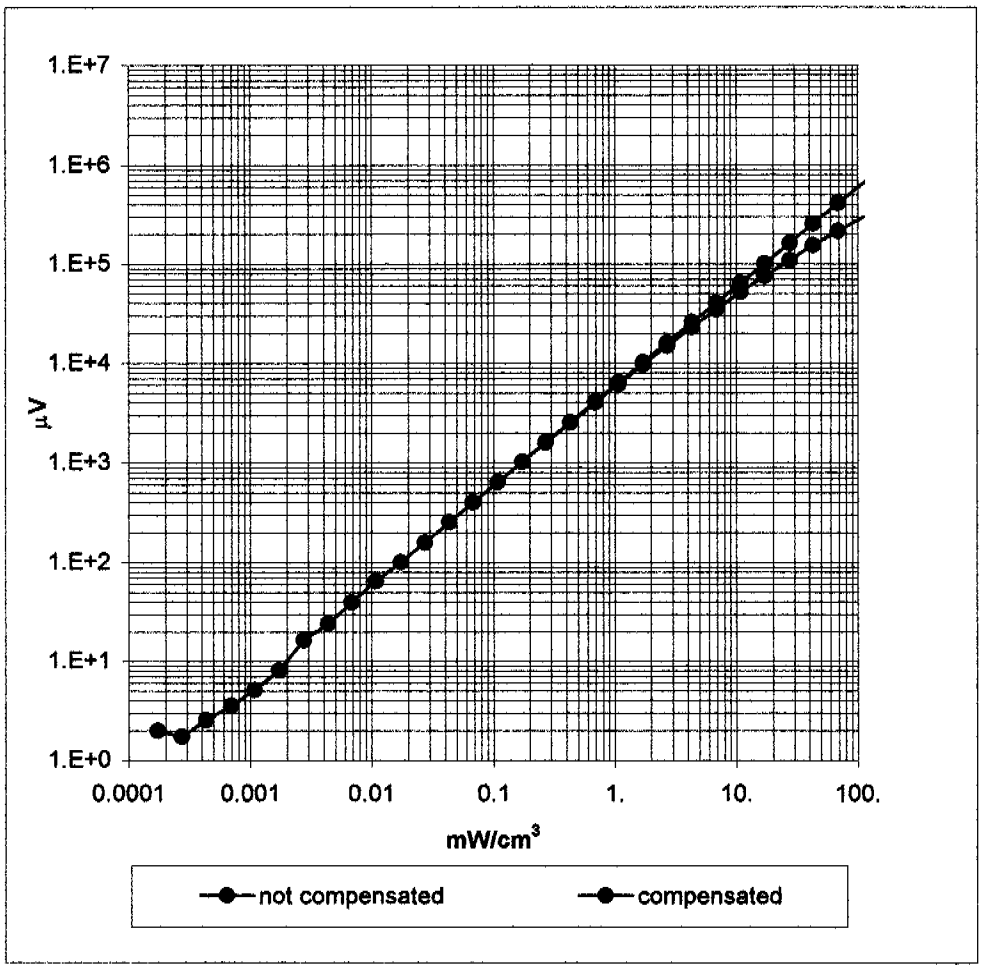

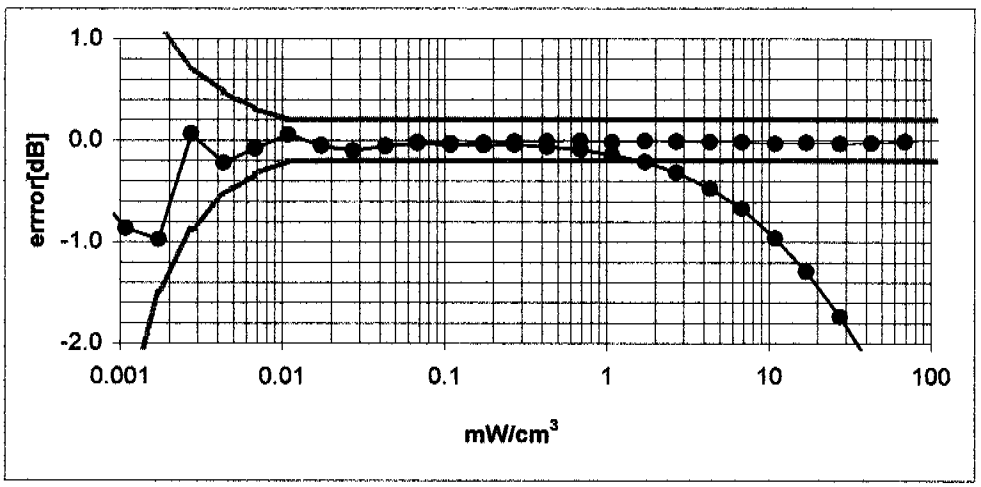

Conversion Factor Assessment

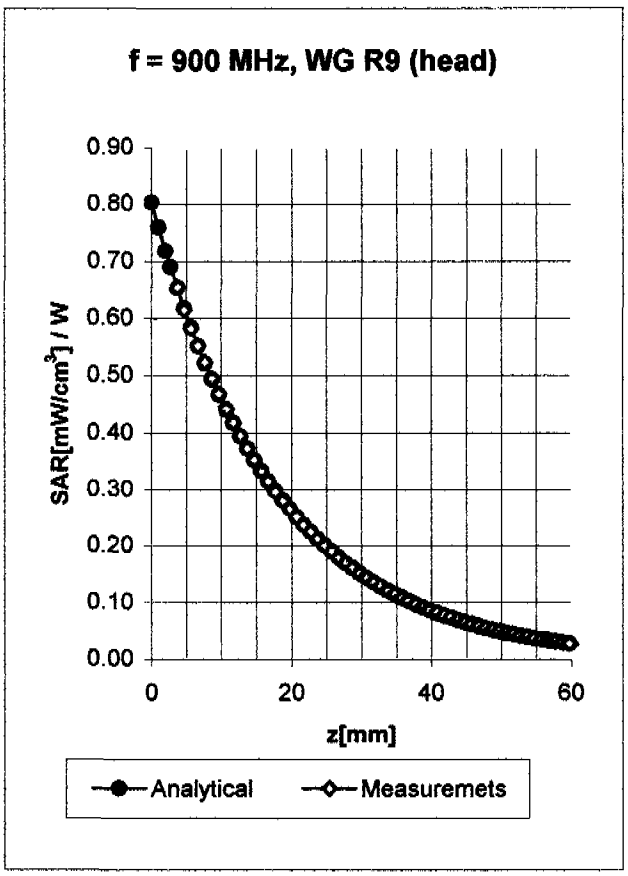

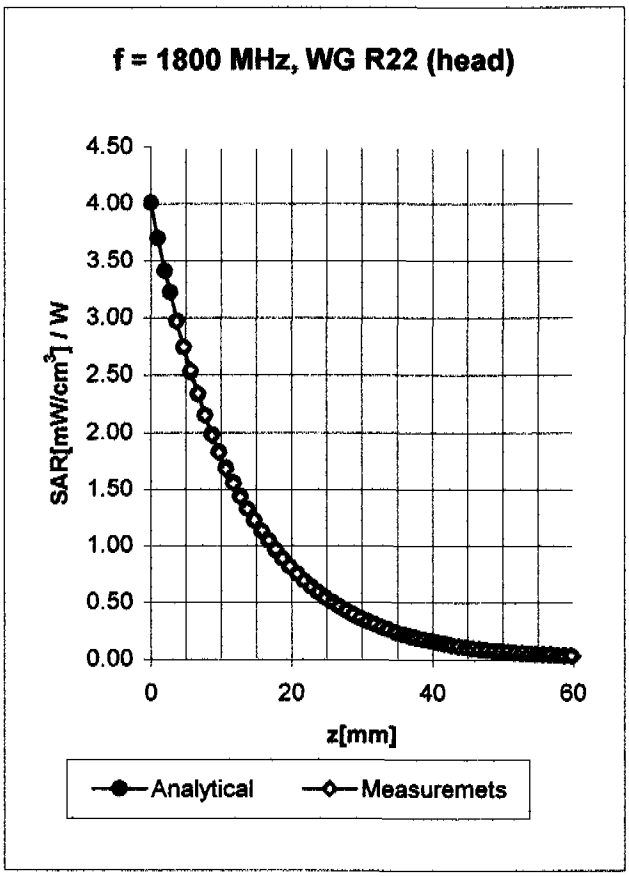

Head	**900 MHz**		**ε_r = 41.5 ± 5%**	**σ = 0.97 ± 5% mho/m**	
Head	**835 MHz**		**ε_r = 41.5 ± 5%**	**σ = 0.90 ± 5% mho/m**	
	ConvF X	**6.4**	± 9.5% (k=2)	Boundary effect:	
	ConvF Y	**6.4**	± 9.5% (k=2)	Alpha	**0.47**
	ConvF Z	**6.4**	± 9.5% (k=2)	Depth	**2.17**

Head	**1800 MHz**		**ε_r = 40.0 ± 5%**	**σ = 1.40 ± 5% mho/m**	
Head	**1900 MHz**		**ε_r = 40.0 ± 5%**	**σ = 1.40 ± 5% mho/m**	
	ConvF X	**5.3**	± 9.5% (k=2)	Boundary effect:	
	ConvF Y	**5.3**	± 9.5% (k=2)	Alpha	**0.49**
	ConvF Z	**5.3**	± 9.5% (k=2)	Depth	**2.52**

Deviation from Isotropy in HSL

Error (θ,ϕ), f = 900 MHz

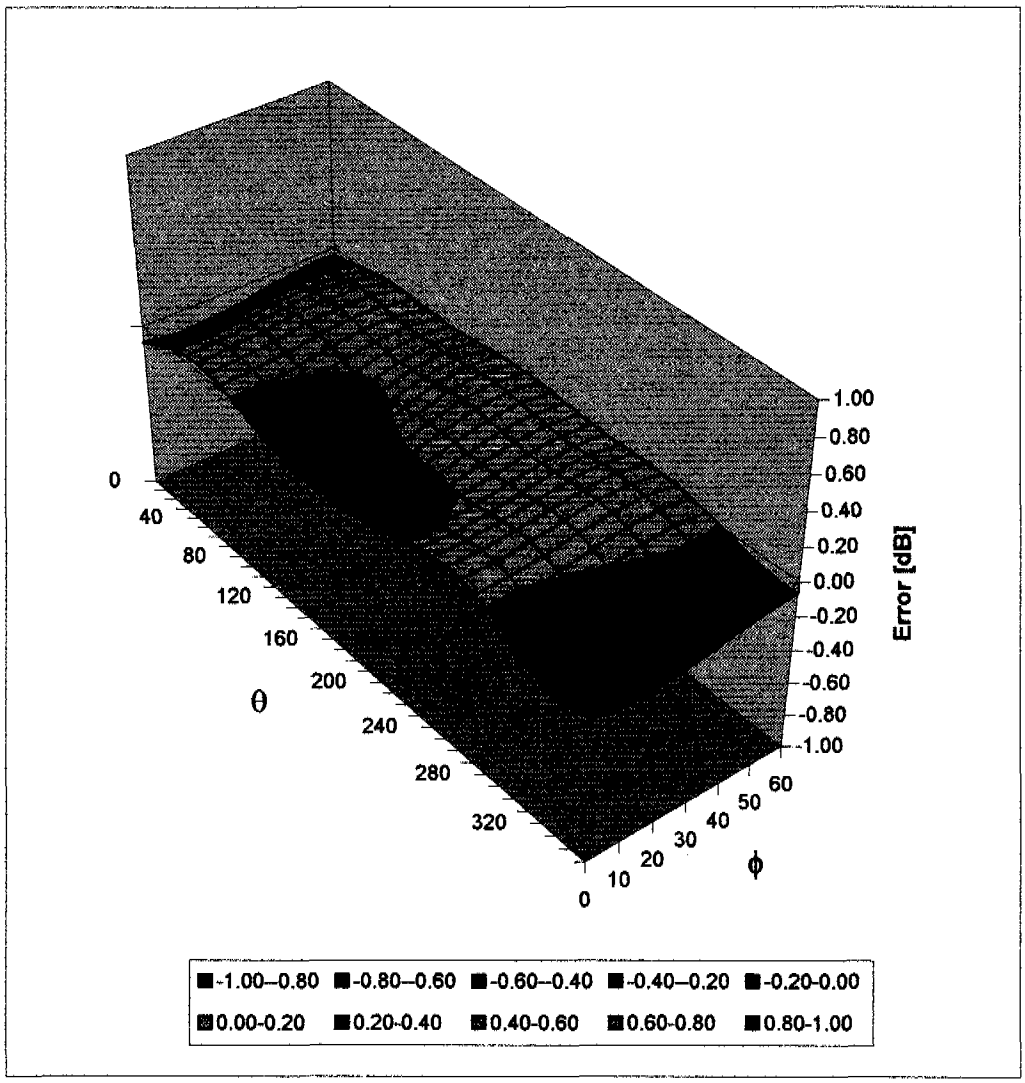

Schmid & Partner
Engineering AG

Zeughausstrasse 43, 8004 Zurich, Switzerland, Phone +41 1 245 97 00, Fax +41 1 245 97 79

Calibration Certificate

Dosimetric E-Field Probe

Type:	**ET3DV6**
Serial Number:	**1711**
Place of Calibration:	**Zurich**
Date of Calibration:	**November 26, 2002**
Calibration Interval:	**12 months**

Schmid & Partner Engineering AG hereby certifies, that this device has been calibrated on the date indicated above. The calibration was performed in accordance with specifications and procedures of Schmid & Partner Engineering AG.

Wherever applicable, the standards used in the calibration process are traceable to international standards. In all other cases the standards of the Laboratory for EMF and Microwave Electronics at the Swiss Federal Institute of Technology (ETH) in Zurich, Switzerland have been applied.

Calibrated by:	D. Vellet
Approved by:	F. Bomholt

Schmid & Partner
Engineering AG

Zeughausstrasse 43, 8004 Zurich, Switzerland, Telephone +41 1 245 97 00, Fax +41 1 245 97 79

Probe ET3DV6

SN:1711

Additional Conversion Factors

Calibrated: November 26, 2002

Calibrated for DASY Systems

(Note: non-compatible with DASY2 system!)

Conversion Factor Assessment

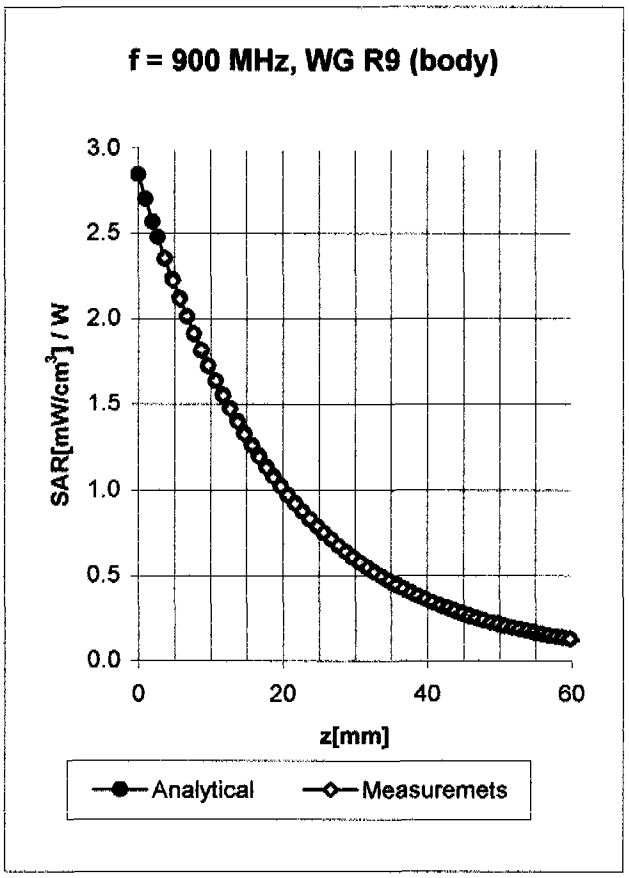

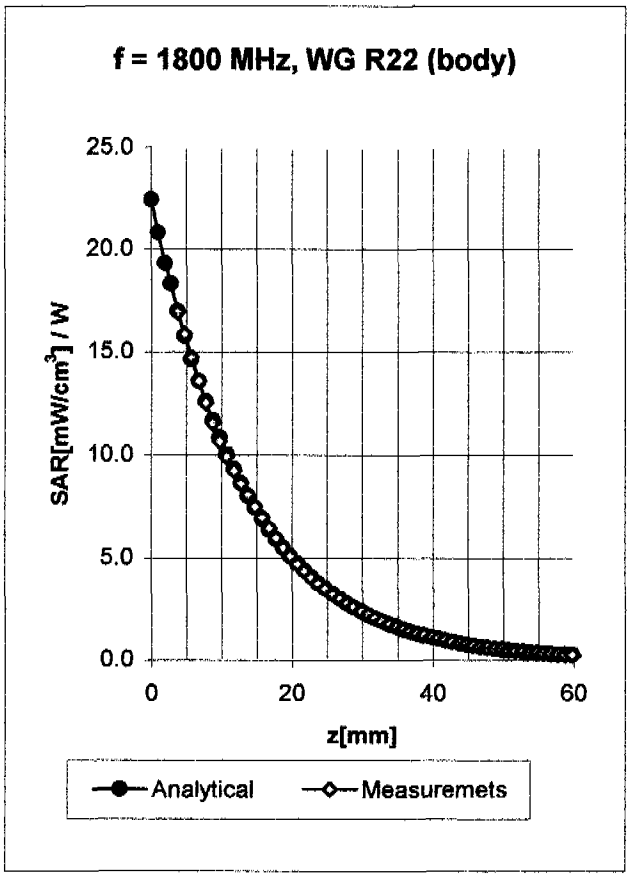

Body	**900 MHz**	ε_r **= 55.0 ± 5%**	σ **= 1.05 ± 5% mho/m**	
Body	**835 MHz**	ε_r **= 55.2 ± 5%**	σ **= 0.97 ± 5% mho/m**	
	ConvF X	**6.2** ± 9.5% (k=2)	Boundary effect:	
	ConvF Y	**6.2** ± 9.5% (k=2)	Alpha	**0.41**
	ConvF Z	**6.2** ± 9.5% (k=2)	Depth	**2.49**

Body	**1800 MHz**	ε_r **= 53.3 ± 5%**	σ **= 1.52 ± 5% mho/m**	
Body	**1900 MHz**	ε_r **= 53.3 ± 5%**	σ **= 1.52 ± 5% mho/m**	
	ConvF X	**5.0** ± 9.5% (k=2)	Boundary effect:	
	ConvF Y	**5.0** ± 9.5% (k=2)	Alpha	**0.63**
	ConvF Z	**5.0** ± 9.5% (k=2)	Depth	**2.26**

Conversion Factor Assessment

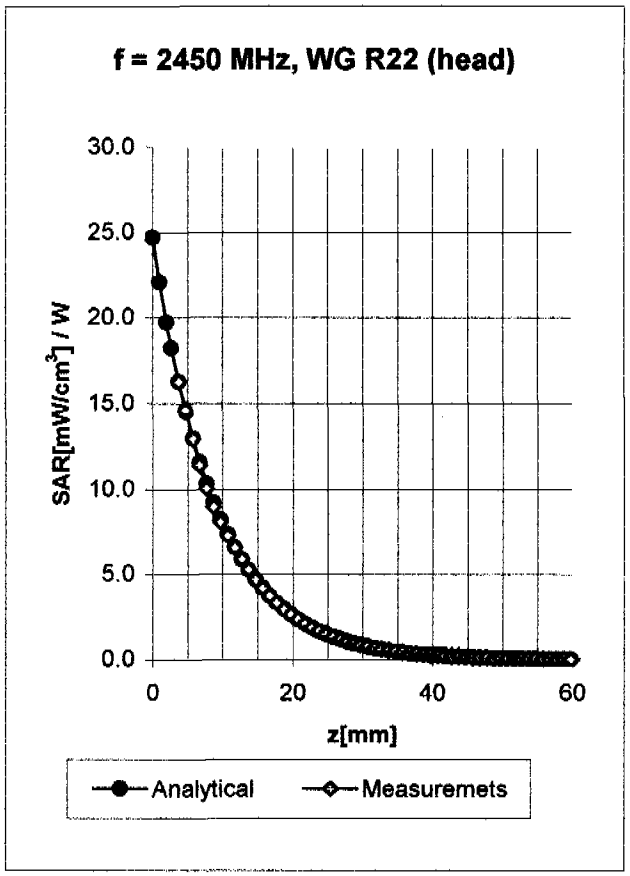

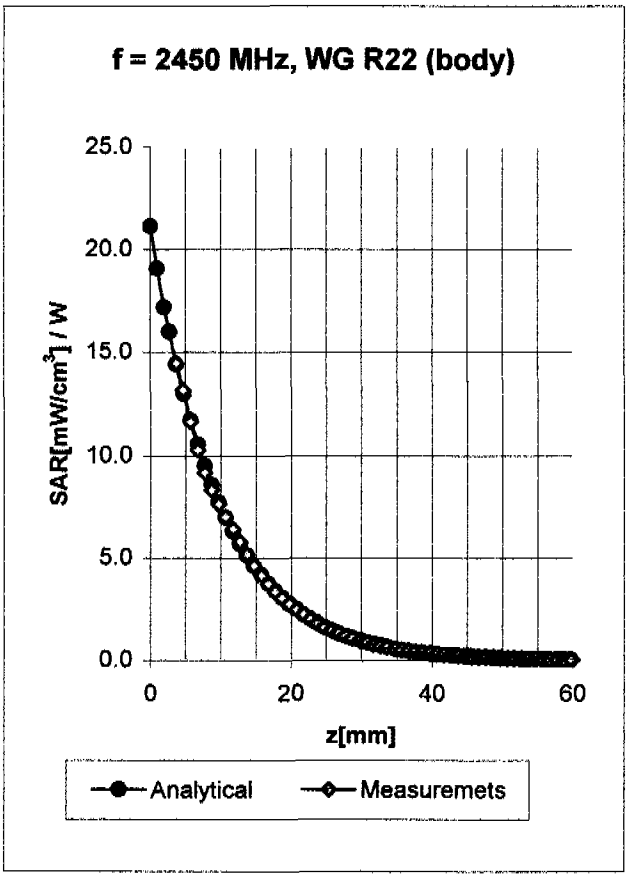

2450	**Head**	**MHz**	ε_r **= 39.2 ± 5%**	σ **= 1.80 ± 5% mho/m**

ConvF X	**4.9** ± 8.9% (k=2)	Boundary effect:	
ConvF Y	**4.9** ± 8.9% (k=2)	Alpha	**1.00**
ConvF Z	**4.9** ± 8.9% (k=2)	Depth	**1.72**

2450	**Body**	**MHz**	ε_r **= 52.7 ± 5%**	σ **= 1.95 ± 5% mho/m**

ConvF X	**4.4** ± 8.9% (k=2)	Boundary effect:	
ConvF Y	**4.4** ± 8.9% (k=2)	Alpha	**1.00**
ConvF Z	**4.4** ± 8.9% (k=2)	Depth	**1.85**

Schmid & Partner Engineering AG

s p e a g

Zeughausstrasse 43, 8004 Zurich, Switzerland
Phone +41 1 245 9700, Fax +41 1 245 9779
info@speag.com, http://www.speag.com

Additional Conversion Factors

for Dosimetric E-Field Probe

Type:	**ET3DV6**
Serial Number:	**1711**
Place of Assessment:	**Zurich**
Date of Assessment:	**September 30, 2003**
Probe Calibration Date:	**September 3, 2002**

Schmid & Partner Engineering AG hereby certifies that conversion factor(s) of this probe have been evaluated on the date indicated above. The assessment was performed using the FDTD numerical code SEMCAD of Schmid & Partner Engineering AG. Since the evaluation is coupled with measured conversion factors, it has to be recalculated yearly, i.e., following the re-calibration schedule of the probe. The uncertainty of the numerical assessment is based on the extrapolation from measured value at 900 MHz or at 1800 MHz.

Assessed by:

Zeughausstrasse 43, 8004 Zurich, Switzerland
Phone +41 1 245 9700, Fax +41 1 245 9779
info@speag.com, http://www.speag.com

Dosimetric E-Field Probe ET3DV6 SN:1711

Conversion factor (± standard deviation)

150 MHz (100-200 MHz)	ConvF	**8.9 ± 8%**	**[illegible] = 52.3 ± 5%** **[illegible] = 0.76 ± 5% mho/m** (head tissue)
150 MHz (100-200 MHz)	ConvF	**8.5 ± 8%**	**[illegible] = 61.9 ± 5%** **[illegible] = 0.80 ± 5% mho/m** (body tissue)
300 MHz (250-350 MHz)	ConvF	**7.7 ± 8%**	**[illegible] = 45.3 ± 5%** **[illegible] = 0.87 ± 5% mho/m** (head tissue)
450 MHz (400-500 MHz)	ConvF	**7.3 ± 8%**	**[illegible] = 43.5 ± 5%** **[illegible] = 0.87 ± 5% mho/m** (head tissue)
450 MHz (400-500 MHz)	ConvF	**7.5 ± 8%**	**[illegible] = 56.7 ± 5%** **[illegible] = 0.94 ± 5% mho/m** (body tissue)

Schmid & Partner
Engineering AG

DASY - DOSIMETRIC ASSESSMENT SYSTEM

CALIBRATION REPORT

DATA ACQUISITION ELECTRONICS

MODEL:	**DAE3 V1**
SERIAL NUMBER:	**522**

This Data Acquisition Unit was calibrated and tested using a FLUKE 702 Process Calibrator. Calibration and verification were performed at an ambient temperature of 23 ± 5 °C and a relative humidity of < 70%.

Measurements were performed using the standard DASY software for converting binary values, offset compensation and noise filtering. Software settings are indicated in the reports.

Results from this calibration relate only to the unit calibrated.

Calibrated by:	**Storchenegger**
Calibration Date:	**11. 09. 2002**
DASY Software Version:	**DASY3 V3.1c**

1. DC Voltage Measurement

DA - Converter Values from DAE

High Range: 1LSB = 6.1µV , full range = 400 mV

Low Range: 1LSB = 61nV , full range = 4 mV

Software Set-up: Calibration time: 3 sec Measuring time: 3 sec

Setup	X	Y	Z
High Range	403.7567398	403.5333268	403.8600523
Low Range	3.90623	3.92439	3.92633
Connector Position	44 °		

High Range	Input	Reading in µV	% Error
Channel X + Input	200mV	200000.4	0.00
	20mV	19994.9	-0.03
Channel X - Input	20mV	-19994.4	-0.03
Channel Y + Input	200mV	199999.9	0.00
	20mV	19996.04	-0.02
Channel Y - Input	20mV	-19995.35	-0.02
Channel Z + Input	200mV	200000	0.00
	20mV	19993.57	-0.03
Channel Z - Input	20mV	-19994.59	-0.03

Low Range	Input	Reading in µV	% Error
Channel X + Input	2mV	2000.07	0.00
	0.2mV	200.266	0.13
Channel X - Input	0.2mV	-200.669	0.33
Channel Y + Input	2mV	2000.005	0.00
	0.2mV	199.4087	-0.30
Channel Y - Input	0.2mV	-200.5428	0.27
Channel Z + Input	2mV	2000.05	0.00
	0.2mV	199.285	-0.36
Channel Z - Input	0.2mV	-201.008	0.50

2. Common mode sensitivity

Software Set-up
Calibration time: 3 sec, Measuring time: 3 sec
High/Low Range

in µV	Common mode Input Voltage	High Range Reading	Low Range Reading
Channel X	200mV	1.89173	1.5706
	- 200mV	-0.957298	-1.63568
Channel Y	200mV	1.06159	0.55289
	- 200mV	-1.07262	-1.60898
Channel Z	200mV	-7.02304	-7.75271
	- 200mV	6.48984	6.11901

3. Channel separation

Software Set-up
Calibration time: 3 sec, Measuring time: 3 sec
High Range

in µV	Input Voltage	Channel X	Channel Y	Channel Z
Channel X	200mV	-	0.967802	-0.38491
Channel Y	200mV	0.985686	-	-0.851851
Channel Z	200mV	0.469187	-0.713242	-

4. AD-Converter Values with inputs shorted

in LSB	Low Range	High Range
Channel X	14950.9	15343
Channel Y	14931.4	15456.6
Channel Z	15332.2	15470.3

5. Input Offset Measurement

Measured after 15 min warm-up time of the Data Acquisition Electronic.
Every Measurement is preceded by a calibration cycle.

Software set-up:

Calibration time:	3 sec
Measuring time:	3 sec
Number of measurements:	100, Low Range

Input 10MΩ

in µV	Average	min. Offset	max. Offset	Std. Deviation
Channel X	-1.11	-3.70	0.56	0.65
Channel Y	0.79	-0.47	2.26	0.38
Channel Z	-1.60	-3.56	-0.55	0.34

Input shorted

in µV	Average	min. Offset	max. Offset	Std. Deviation
Channel X	-1.36	-2.30	0.49	0.39
Channel Y	0.05	-0.63	1.82	0.33
Channel Z	-0.53	-1.37	0.58	0.21

6. Input Offset Current

in fA	Input Offset Current
Channel X	< 25
Channel Y	< 25
Channel Z	< 25

7. Input Resistance

	Calibrating	Measuring
Channel X	200 kΩ	200 MΩ
Channel Y	200 kΩ	200 MΩ
Channel Z	200 kΩ	200 MΩ

8. Low Battery Alarm Voltage

in V	Alarm Level
Supply (+ Vcc)	7.83 V
Supply (- Vcc)	-7.62 V

9. Power Consumption

in mA	Switched off	Stand by	Transmitting
Supply (+ Vcc)	0.000	5.79	13.9
Supply (- Vcc)	-0.011	-8.07	-9.24

10. Functional test

Touch async pulse 1	ok
Touch async pulse 2	ok
Touch status bit 1	ok
Touch status bit 2	ok
Remote power off	ok
Remote analog Power control	ok
Modification Status	B – C

Date: 11.09.02 **Signature:** P. [illegible]

Appendix B

Measurement Plots

Date/Time: 10/11/03 08:25:09

Test Laboratory: ELECTRONIC TECHNOLOGY SYSTEMS DR. GENZ GMBH
File Name: Dipol_Calibration._300 (h)_11.10.2003.da4

Dipol_Valid._300 (h)_11.10.2003

DUT: Dipole 300 MHz; Type: 3121C-DB3; Serial: 9709-1325
Program: Dipol Calibration 300

Communication System: CW; Frequency: 300 MHz;Duty Cycle: 1:1
Medium: Head 300 MHz (σ = 0.861794 mho/m, ε_r = 45.6516, ρ = 1000 kg/m^3)
Phantom section: Flat Section

DASY4 Configuration:

- Probe: ET3DV6 - SN1711; ConvF(7.7, 7.7, 7.7); Calibrated: 11/29/2002
- Sensor-Surface: 4mm (Mechanical And Optical Surface Detection)
- Electronics: DAE3 Sn522; Calibrated: 9/11/2002
- Phantom: Flat Phantom 4; Type: Flat Phantom 4.
- Measurement SW: DASY4, V4.1 Build 47; Postprocessing SW: SEMCAD, V1.6 Build 115

Dipol 300 (250mW)/Area Scan (101x201x1): Measurement grid: dx=10mm, dy=10mm
Reference Value = 26.1 V/m
Power Drift = -0.012 dB
Maximum value of SAR = 0.806mW/g

Dipol 300 (250mW)/Zoom Scan (7x7x7)/Cube 0: Measurement grid: dx=5mm, dy=5mm, dz=5mm
Peak SAR (extrapolated) = 1.32 W/kg
SAR(1 g) = 0.773 mW/g; SAR(10 g) = 0.499 mW/g
Reference Value = 26.1 V/m
Power Drift = -0.012 dB
Maximum value of SAR = 0.802 mW/g

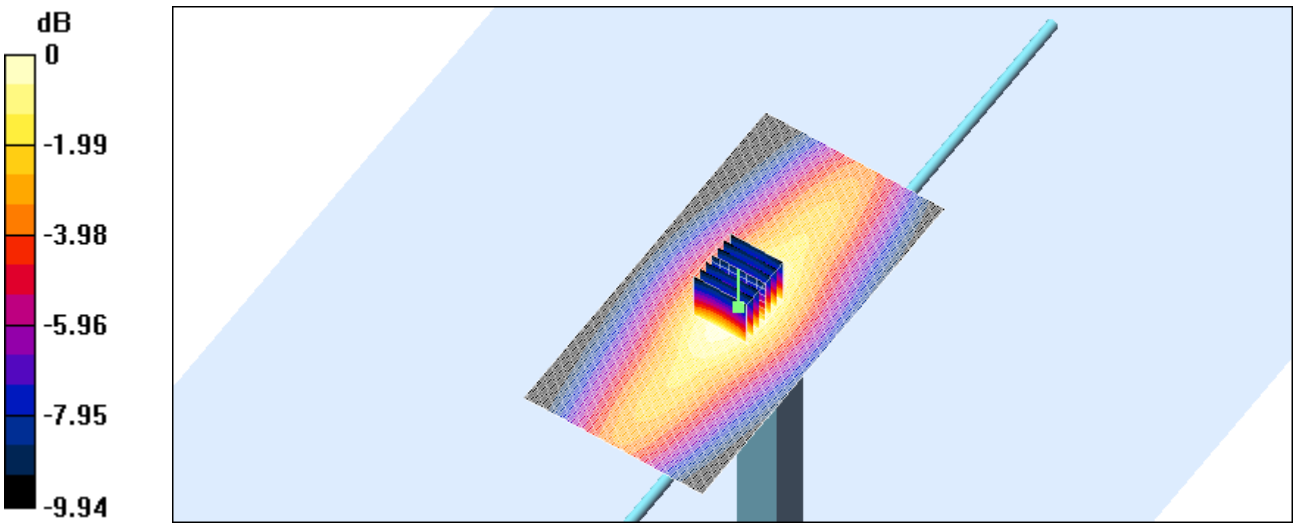

0 dB = 0.802mW/g

Date/Time: 10/11/03 11:07:41

Test Laboratory: ELECTRONIC TECHNOLOGY SYSTEMS DR. GENZ GMBH
File Name: front_low_2,5cm.da4

front_low_2,5cm

DUT: VHF Transceiver; Type: ATP-100; Serial: none
Program: CW 150 MHz

Communication System: CW; Frequency: 136.025 MHz;Duty Cycle: 1:1
Medium: Head 150 MHz (σ = 0.74 mho/m, ε_r = 52.8, ρ = 1000 kg/m^3)
Phantom section: Flat Section

DASY4 Configuration:

- Probe: ET3DV6 - SN1711; ConvF(8.9, 8.9, 8.9); Calibrated: 11/29/2002
- Sensor-Surface: 4mm (Mechanical And Optical Surface Detection)
- Electronics: DAE3 Sn522; Calibrated: 9/11/2002
- Phantom: SAM 12; Type: TP-1217; Serial: QD000P40CA
- Measurement SW: DASY4, V4.1 Build 47; Postprocessing SW: SEMCAD, V1.6 Build 115

./Area Scan (61x151x1): Measurement grid: dx=15mm, dy=15mm
Reference Value = 40.2 V/m
Power Drift = 0.08 dB
Maximum value of SAR = 1.73mW/g

./Zoom Scan (7x7x7)/Cube 0: Measurement grid: dx=5mm, dy=5mm, dz=5mm
Peak SAR (extrapolated) = 2.23 W/kg
SAR(1 g) = 1.38 mW/g; SAR(10 g) = 0.99 mW/g
Reference Value = 40.2 V/m
Power Drift = 0.08 dB
Maximum value of SAR = 1.62 mW/g

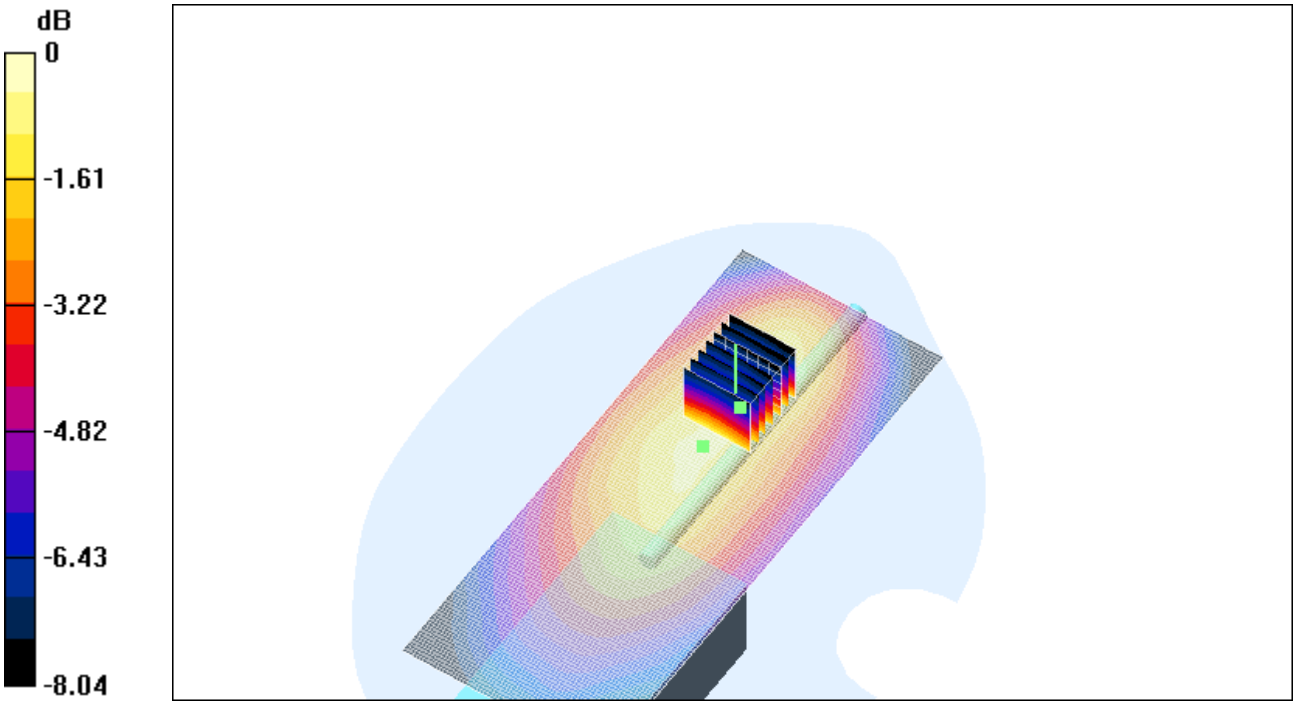

0 dB = 1.62mW/g

Date/Time: 10/11/03 09:34:49

Test Laboratory: ELECTRONIC TECHNOLOGY SYSTEMS DR. GENZ GMBH
File Name: front_mid_2,5cm.da4

front_mid_2,5cm

DUT: VHF Transceiver; Type: ATP-100; Serial: none
Program: CW 150 MHz

Communication System: CW; Frequency: 155.025 MHz;Duty Cycle: 1:1
Medium: Head 150 MHz (σ = 0.77 mho/m, ε_r = 52.4, ρ = 1000 kg/m^3)
Phantom section: Flat Section

DASY4 Configuration:

- Probe: ET3DV6 - SN1711; ConvF(8.9, 8.9, 8.9); Calibrated: 11/29/2002
- Sensor-Surface: 4mm (Mechanical And Optical Surface Detection)
- Electronics: DAE3 Sn522; Calibrated: 9/11/2002
- Phantom: SAM 12; Type: TP-1217; Serial: QD000P40CA
- Measurement SW: DASY4, V4.1 Build 47; Postprocessing SW: SEMCAD, V1.6 Build 115

./Area Scan (61x151x1): Measurement grid: dx=15mm, dy=15mm
Reference Value = 39.8 V/m
Power Drift = 0.02 dB
Maximum value of SAR = 1.31 mW/g

./Zoom Scan (7x7x7)/Cube 0: Measurement grid: dx=5mm, dy=5mm, dz=5mm
Peak SAR (extrapolated) = 2.08 W/kg
SAR(1 g) = 1.3 mW/g; SAR(10 g) = 0.93 mW/g
Reference Value = 39.8 V/m
Power Drift = 0.02 dB
Maximum value of SAR = 1.43 mW/g

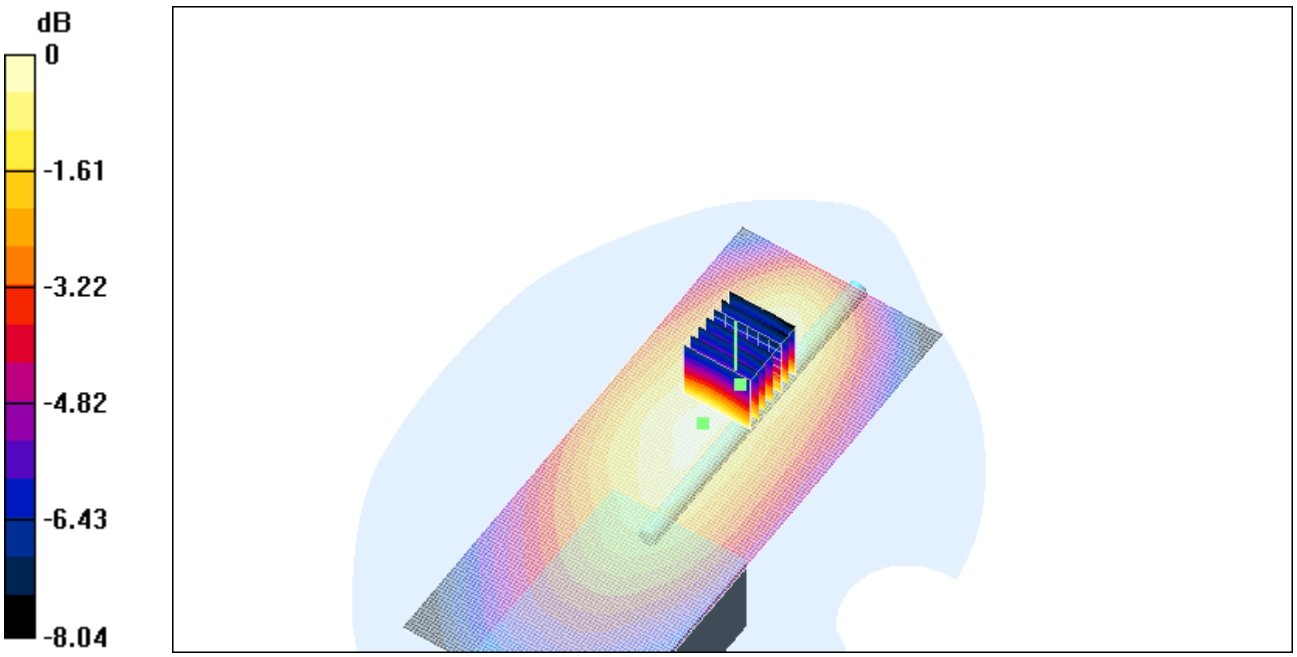

0 dB = 1.43mW/g

Date/Time: 10/11/03 12:28:12

Test Laboratory: ELECTRONIC TECHNOLOGY SYSTEMS DR. GENZ GMBH
File Name: front_high_2,5cm.da4

front_high_2,5cm

DUT: VHF Transceiver; Type: ATP-100; Serial: none
Program: CW 150 MHz

Communication System: CW; Frequency: 173.975 MHz;Duty Cycle: 1:1
Medium: Head 150 MHz (σ = 0.79 mho/m, ε_r = 51.1, ρ = 1000 kg/m^3)
Phantom section: Flat Section

DASY4 Configuration:

- Probe: ET3DV6 - SN1711; ConvF(8.9, 8.9, 8.9); Calibrated: 11/29/2002
- Sensor-Surface: 4mm (Mechanical And Optical Surface Detection)
- Electronics: DAE3 Sn522; Calibrated: 9/11/2002
- Phantom: SAM 12; Type: TP-1217; Serial: QD000P40CA
- Measurement SW: DASY4, V4.1 Build 47; Postprocessing SW: SEMCAD, V1.6 Build 115

./Area Scan (61x151x1): Measurement grid: dx=15mm, dy=15mm
Reference Value = 37.2 V/m
Power Drift = 0.12 dB
Maximum value of SAR = 1.32 mW/g

./Zoom Scan (7x7x7)/Cube 0: Measurement grid: dx=5mm, dy=5mm, dz=5mm
Peak SAR (extrapolated) = 1.88 W/kg
SAR(1 g) = 1.25 mW/g; SAR(10 g) = 0.71 mW/g
Reference Value = 37.2 V/m
Power Drift = 0.12 dB
Maximum value of SAR = 1.32 mW/g

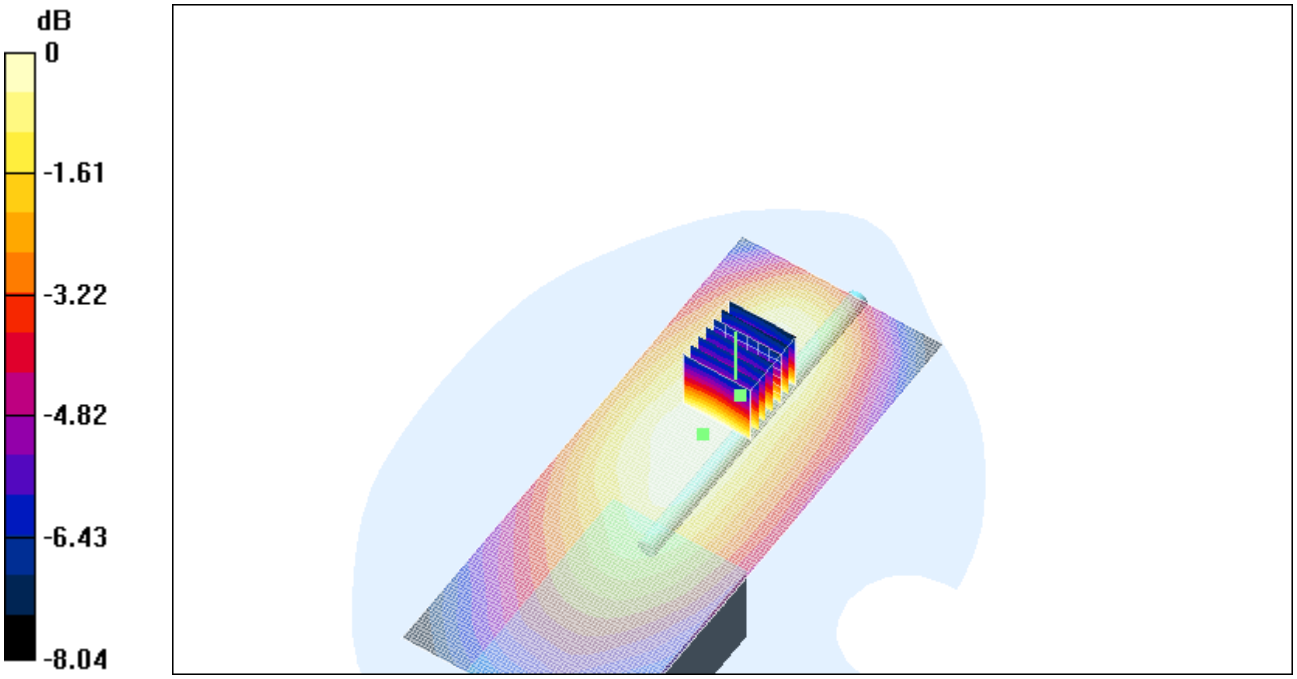

0 dB = 1.32mW/g

Date/Time: 10/11/03 16:01:03

Test Laboratory: ELECTRONIC TECHNOLOGY SYSTEMS DR. GENZ GMBH
File Name: back_low_1cm.da4

back_low_1cm

DUT: VHF Transceiver; Type: ATP-100; Serial: none
Program: CW 150 MHz

Communication System: CW; Frequency: 155.025 MHz;Duty Cycle: 1:1
Medium: Muscle 150 MHz (σ = 0.81 mho/m, ε_r = 62.1, ρ = 1000 kg/m^3)
Phantom section: Flat Section

DASY4 Configuration:

- Probe: ET3DV6 - SN1711; ConvF(8.5, 8.5, 8.5); Calibrated: 11/29/2002
- Sensor-Surface: 4mm (Mechanical And Optical Surface Detection)
- Electronics: DAE3 Sn522; Calibrated: 9/11/2002
- Phantom: SAM 12; Type: TP-1217; Serial: QD000P40CA
- Measurement SW: DASY4, V4.1 Build 47; Postprocessing SW: SEMCAD, V1.6 Build 115

./Area Scan (61x151x1): Measurement grid: dx=15mm, dy=15mm
Reference Value = 47.9 V/m
Power Drift = -0.09 dB
Maximum value of SAR = 2.02mW/g

./Zoom Scan (7x7x7)/Cube 0: Measurement grid: dx=5mm, dy=5mm, dz=5mm
Peak SAR (extrapolated) = 2.63 W/kg
SAR(1 g) = 1.9 mW/g; SAR(10 g) = 1.42mW/g
Reference Value = 47.9 V/m
Power Drift = -0.09 dB
Maximum value of SAR = 2.06 mW/g

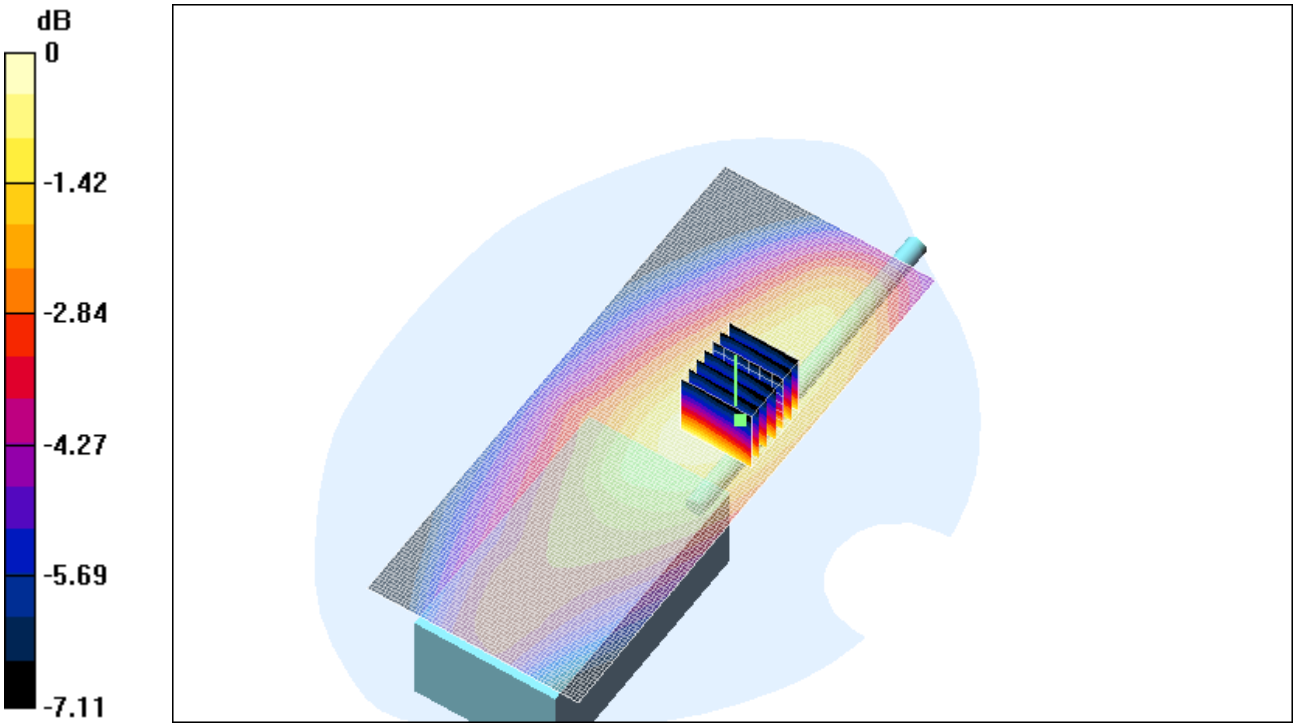

0 dB = 2.06mW/g

Date/Time: 10/11/03 14:34:32

Test Laboratory: ELECTRONIC TECHNOLOGY SYSTEMS DR. GENZ GMBH
File Name: back_mid_1cm.da4

back_mid_1cm

DUT: VHF Transceiver; Type: ATP-100; Serial: none
Program: CW 150 MHz

Communication System: CW; Frequency: 155.025 MHz;Duty Cycle: 1:1
Medium: Muscle 150 MHz (σ = 0.81 mho/m, ε_r = 62.1, ρ = 1000 kg/m^3)
Phantom section: Flat Section

DASY4 Configuration:

- Probe: ET3DV6 - SN1711; ConvF(8.5, 8.5, 8.5); Calibrated: 11/29/2002
- Sensor-Surface: 4mm (Mechanical And Optical Surface Detection)
- Electronics: DAE3 Sn522; Calibrated: 9/11/2002
- Phantom: SAM 12; Type: TP-1217; Serial: QD000P40CA
- Measurement SW: DASY4, V4.1 Build 47; Postprocessing SW: SEMCAD, V1.6 Build 115

./Area Scan (61x151x1): Measurement grid: dx=15mm, dy=15mm
Reference Value = 46.7 V/m
Power Drift = -0.05 dB
Maximum value of SAR = 1.77 mW/g

./Zoom Scan (7x7x7)/Cube 0: Measurement grid: dx=5mm, dy=5mm, dz=5mm
Peak SAR (extrapolated) = 2.52 W/kg
SAR(1 g) = 1.81 mW/g; SAR(10 g) = 1.34 mW/g
Reference Value = 46.7 V/m
Power Drift = -0.05 dB
Maximum value of SAR = 1.93 mW/g

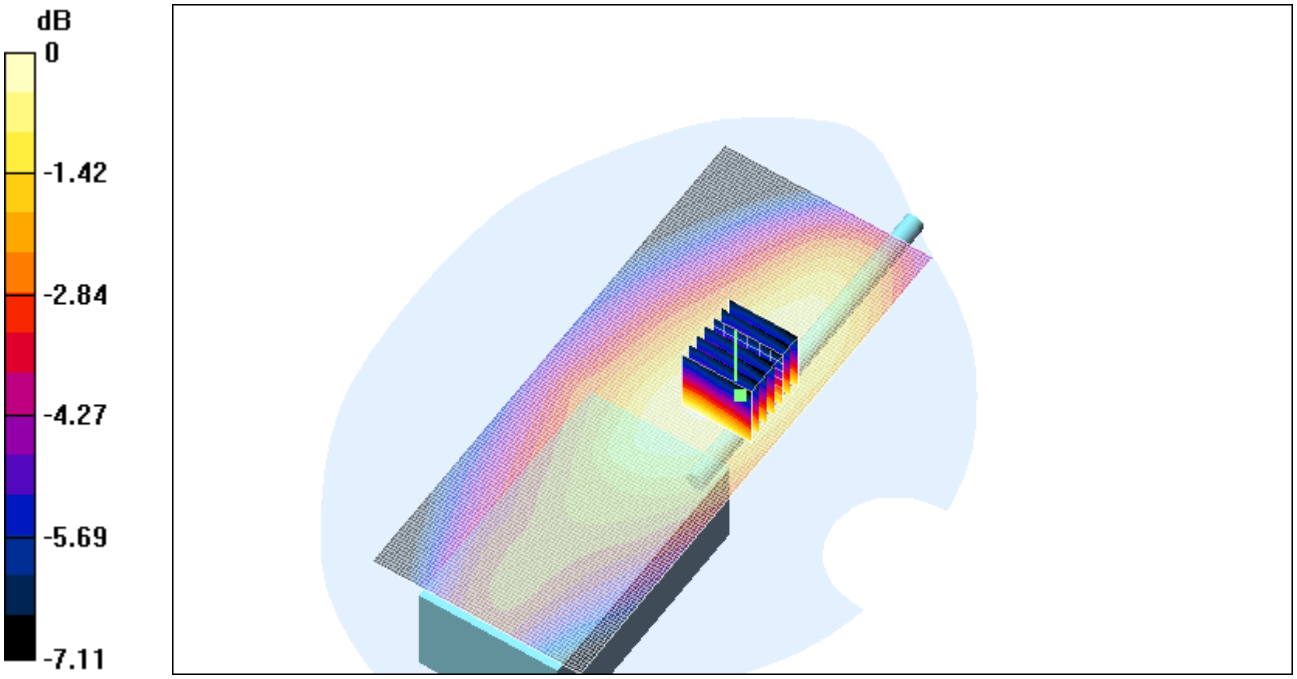

0 dB = 1.93mW/g

Date/Time: 10/11/03 17:40:15

Test Laboratory: ELECTRONIC TECHNOLOGY SYSTEMS DR. GENZ GMBH
File Name: back_high_1cm.da4

back_high_1cm

DUT: VHF Transceiver; Type: ATP-100; Serial: none
Program: CW 150 MHz

Communication System: CW; Frequency: 173.975 MHz;Duty Cycle: 1:1
Medium: Muscle 150 MHz (σ = 0.81 mho/m, ε_r = 62.1, ρ = 1000 kg/m^3)
Phantom section: Flat Section

DASY4 Configuration:

- Probe: ET3DV6 - SN1711; ConvF(8.5, 8.5, 8.5); Calibrated: 11/29/2002
- Sensor-Surface: 4mm (Mechanical And Optical Surface Detection)
- Electronics: DAE3 Sn522; Calibrated: 9/11/2002
- Phantom: SAM 12; Type: TP-1217; Serial: QD000P40CA
- Measurement SW: DASY4, V4.1 Build 47; Postprocessing SW: SEMCAD, V1.6 Build 115

./Area Scan (61x151x1): Measurement grid: dx=15mm, dy=15mm
Reference Value = 46.2 V/m
Power Drift = -0.04 dB
Maximum value of SAR = 1.71 mW/g

./Zoom Scan (7x7x7)/Cube 0: Measurement grid: dx=5mm, dy=5mm, dz=5mm
Peak SAR (extrapolated) = 2.68 W/kg
SAR(1 g) = 1.78 mW/g; SAR(10 g) = 1.30 mW/g
Reference Value = 46.2 V/m
Power Drift = -0.04 dB
Maximum value of SAR = 1.9 mW/g

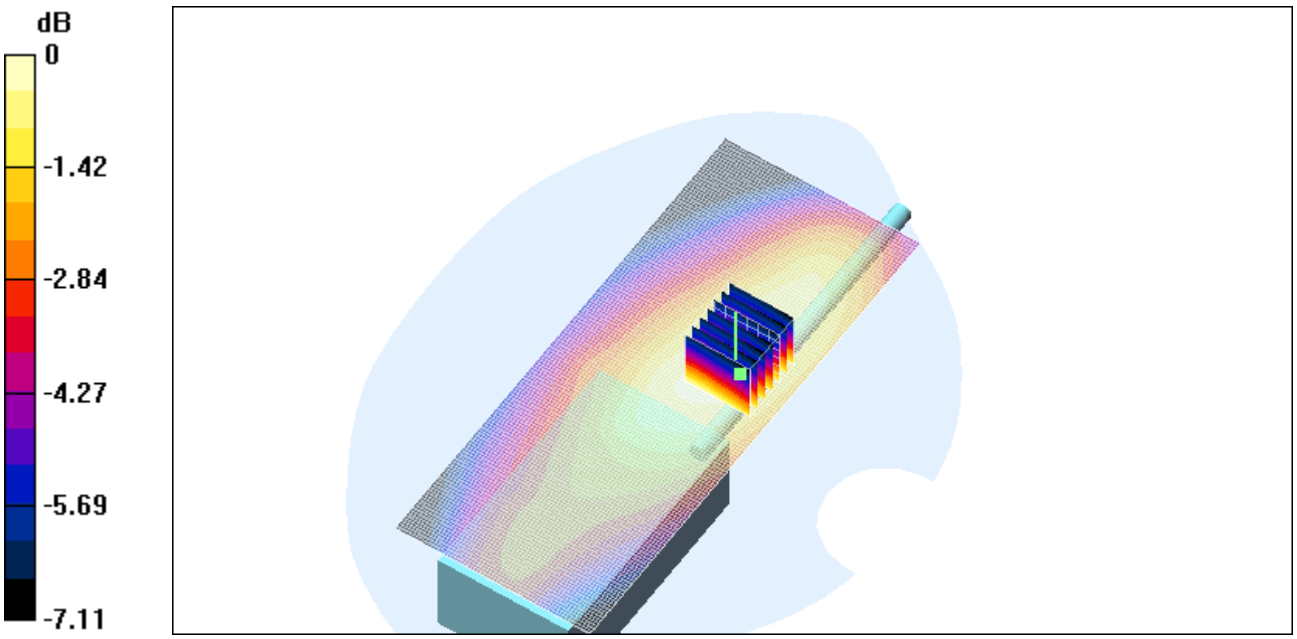

0 dB = 1.9mW/g

Date/Time: 10/11/03 16:04:48

Test Laboratory: ELECTRONIC TECHNOLOGY SYSTEMS DR. GENZ GMBH
File Name: back_low_1cm.da4

back_low_1cm

DUT: VHF Transceiver; Type: ATP-100; Serial: none
Program: CW 150 MHz

Communication System: CW; Frequency: 136.025 MHz;Duty Cycle: 1:1
Medium: Muscle 150 MHz (σ = 0.81 mho/m, ε_r = 62.1, ρ = 1000 kg/m^3)
Phantom section: Flat Section

DASY4 Configuration:

- Probe: ET3DV6 - SN1711; ConvF(8.5, 8.5, 8.5); Calibrated: 11/29/2002
- Sensor-Surface: 4mm (Mechanical And Optical Surface Detection)
- Electronics: DAE3 Sn522; Calibrated: 9/11/2002
- Phantom: SAM 12; Type: TP-1217; Serial: QD000P40CA
- Measurement SW: DASY4, V4.1 Build 47; Postprocessing SW: SEMCAD, V1.6 Build 115

./Area Scan (61x151x1): Measurement grid: dx=15mm, dy=15mm

./Zoom Scan (7x7x7)/Cube 0: Measurement grid: dx=5mm, dy=5mm, dz=5mm
Peak SAR (extrapolated) = 2.63 W/kg
SAR(1 g) = 1.9 mW/g; SAR(10 g) = 1.42 mW/g
Reference Value = 47.9 V/m
Power Drift = -0.09 dB
Maximum value of SAR = 2.06 mW/g

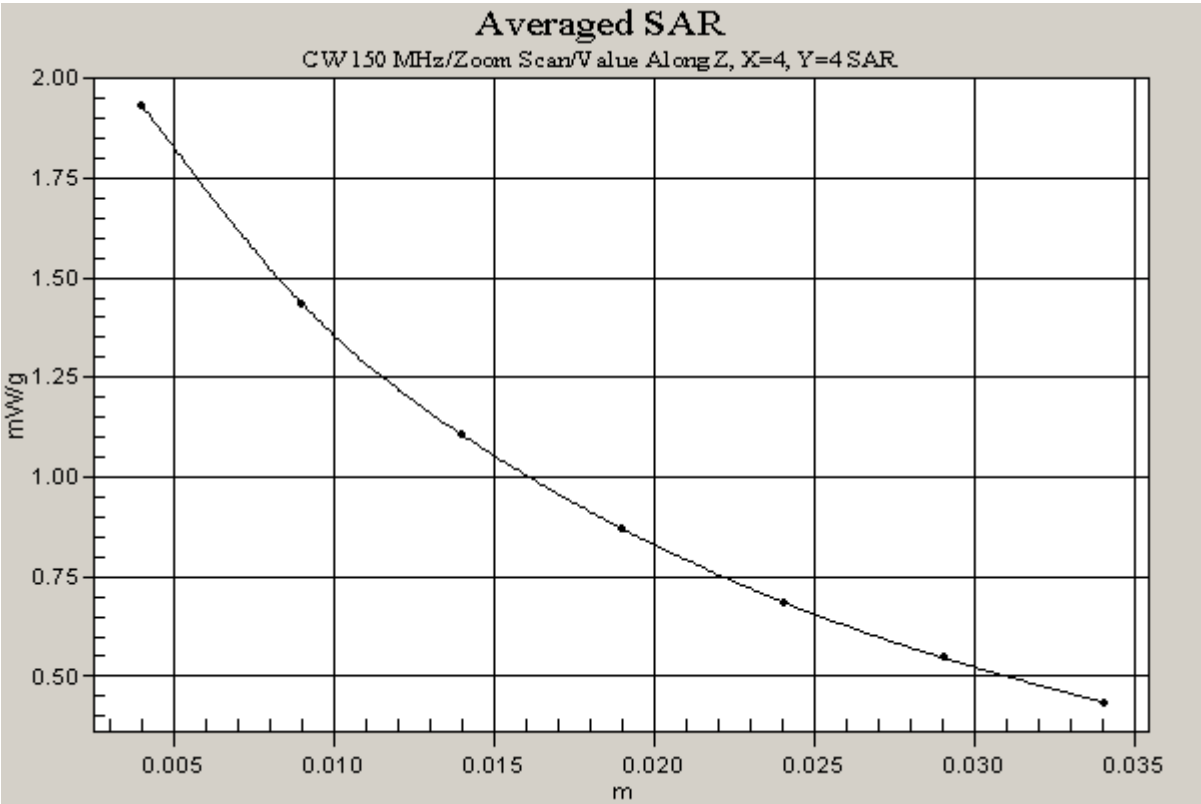

Appendix C

Pictures

Appendix

A. Pictures

2,5 cm

10
11
12
13
14
15
16
17
18
19
20
1120