FCC ID:

OOL UKL 601 03

Extracted from page 13

MARKING INSTRUCTION FOR RAU, MINI-LINK BAS AND E Micro.

Abstrakt

This document describes the marking on RAU, MINI-LINK BAS and E Micro, MINI-LINK E.

Application

Contents

1	General	2
2	Marking in production	2
3	Marking for delivery	6
4	Customer specified marking	7
5	Packaging	14
6	Appendix	15

1 GENERAL

The product that consists of various parts, is defined by its ordering code. This instruction describes which parts that shall be marked and how the marking should appear on the product and on the package.

2 MARKING IN PRODUCTION

Label LZF 401 1075 shall be used to mark the product. The information is stated below.

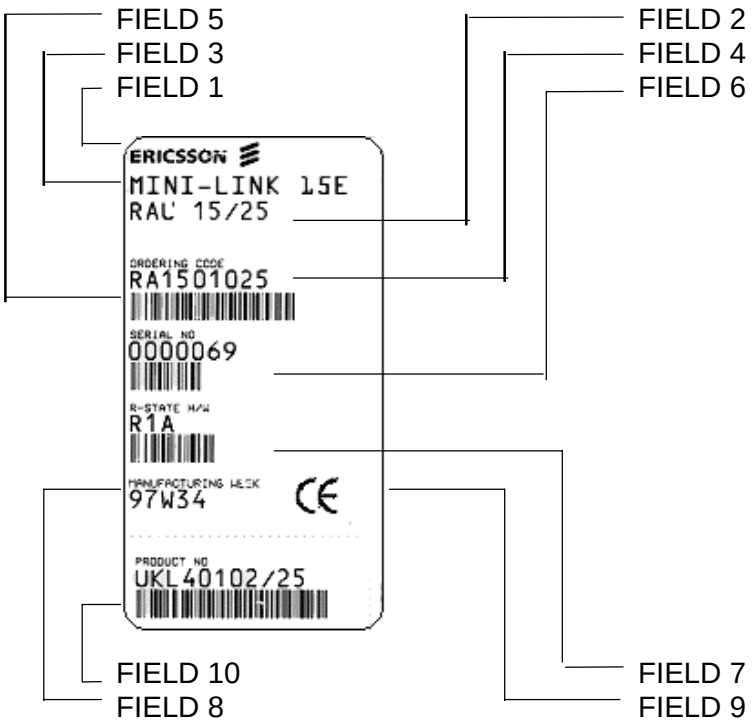

Table 1.

	LETTERS	BARCODE	TEXT SIZE	FIELD
LOGOTYPE	YES	NO	2,5(+-0,5)	1
MINI-LINK INCL. RADIOTYPE	YES	NO	3,0(+-0,5)	2
RAU INCL. RADIOTYPE AND SUB-BAND	YES	NO	3,0(+-0,5)	3
ORDERING CODE WITHOUT INDEX	YES	YES	3,0(+-0,5)	5
SERIAL NUMBER	YES	YES	3,0(+-0,5	6
REVISION STATE HARDWARE	YES	YES	3,0(+-0,5)	7
MANUFACTURING WEEK	YES	NO	3,0(+-0,5)	8
CE MARKING	YES	NO	5,4(+-0,5)	9
PRODUCTION NUMBER	YES	YES	3,0(+-0,5)	10

The RAU unit shall also be marked with the label SVB 18605/91 (the Ericsson logotype), se point 2.1.

2.1 POSITIONING

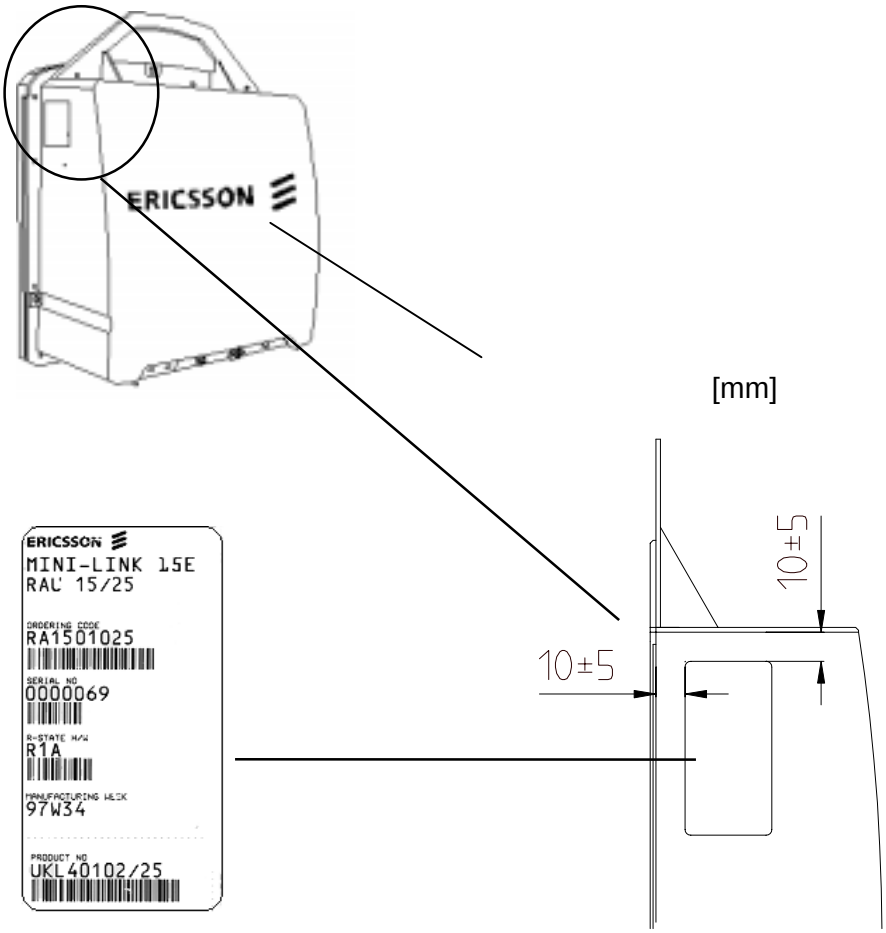

.

2.2 MÄRKNING RAU 2, E MICRO AND MINI-LINK BAS.

Label SVB 154 63/1shall be used to mark the product. The information on label is stated in table 2.

Table 2.

	LETTERS	BARCODE	TEXTSIZE	FIELD
LOGOTYP	JA	NEJ	2,5(+-0,5)	1
MINI-LINK PLUS. RADIO TYPE	JA	NEJ	3,0(+-0,5)	2
ORDERINGCODE WITHOUT INDEX	JA	NEJ	3,0(+-0,5)	7
SERIAL NUMBER	JA	JA	3,0(+-0,5)	3
R-STATE	JA	NEJ	3,0(+-0,5)	6
MANUFACTURING WEEK	JA	NEJ	3,0(+-0,5)	5
PRODUCT NUMBER	JA	JA	3,0(+-0,5)	4

2.3 POSITIONING

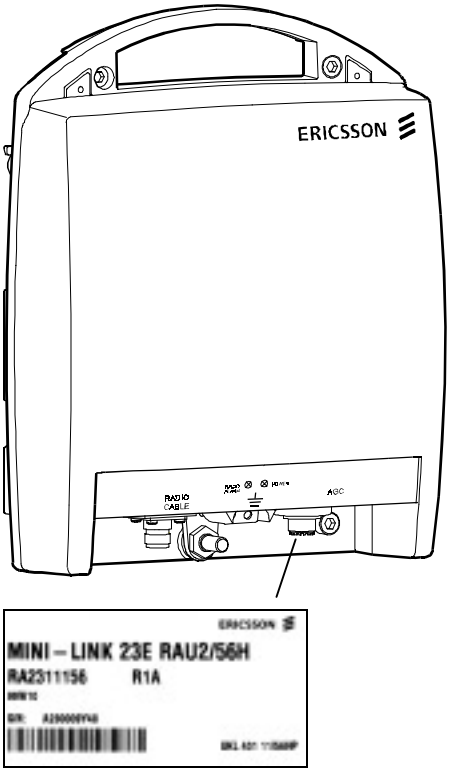

3 MARKING FOR DELIVERY

Label LZF 401 1086 is to be placed so it covers field 10. The label shall inform about the software orderingcode and the software revision stated in letters, see point 3.1.

3.1 POSITIONING

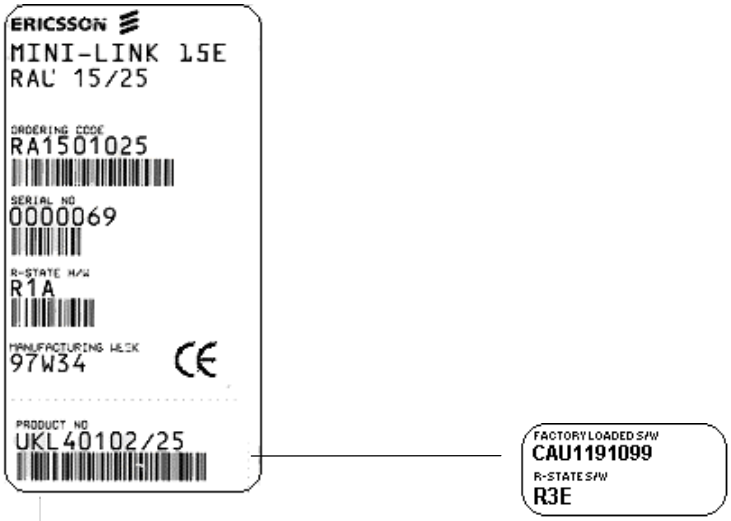

3.2 RAU2, E-MICRO AND MINI LINK BAS

Label as point 2.2

4 CUSTOMER SPECIFIED MARKING

4.1 CUSTOMER MARKING ACCORDING TO OPTION 60.

The label that shows that the product is confirmed by BZT (Germany), see illustration below.

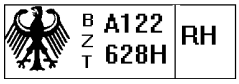

The number on the BZT-label depends on the products ordering code, see table 3.

Table 3.

RAU -TYPE	BZT-nr
MINI-LINK 7-E	xxxxxxxx
MINI-LINK 15-E	A122628H RD
MINI-LINK 18-E	xxxxxxxx
MINI-LINK 23-E	A120376F RD
MINI-LINK 26-E	A122484H RD
MINI-LINK 38-E	A121686F RD

4.1.1 Positioning RAU

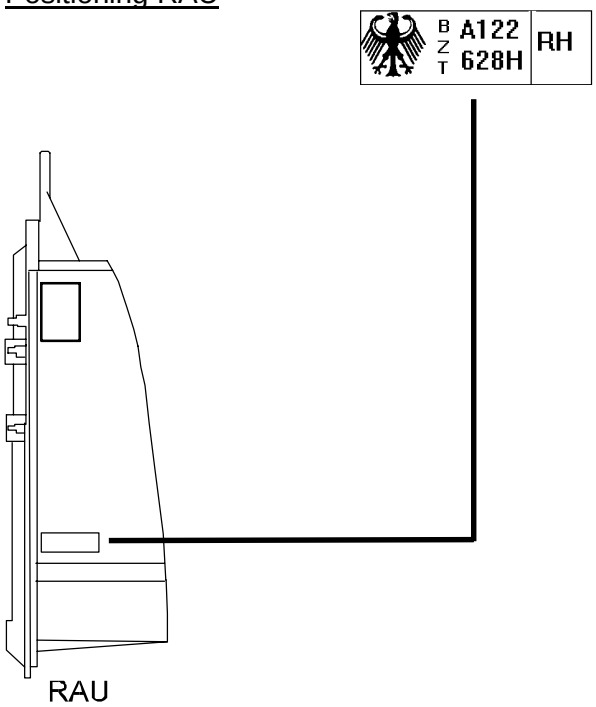

4.1.2 Positioning RAU2

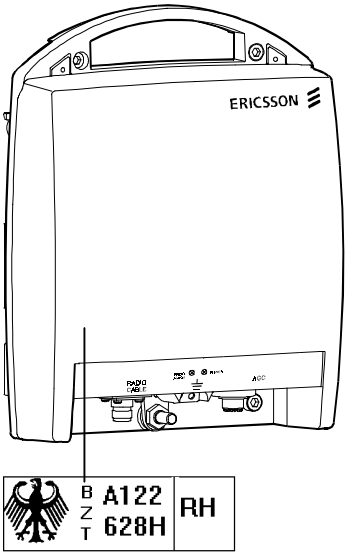

4.2 CUSTOMER MARKING ACC. TO OPTION 61.

The product is marked with different labels specified by the customer.

One label that shows that the product is confirmed by BZT (Germany), BOSCH´s product code, BOSCH´s ID.nr and date of production.

- One BOSCH logotype label on the RAU.

-One ESD-warning sign.

The product is marked according to point 4.2.1 and4.2.2..
The number on the BZT- label, BOSCH´s product number and BOSCH´s ID number depends of the ordering code, see point 4.3.

4.2.1 <u>Positioning</u>

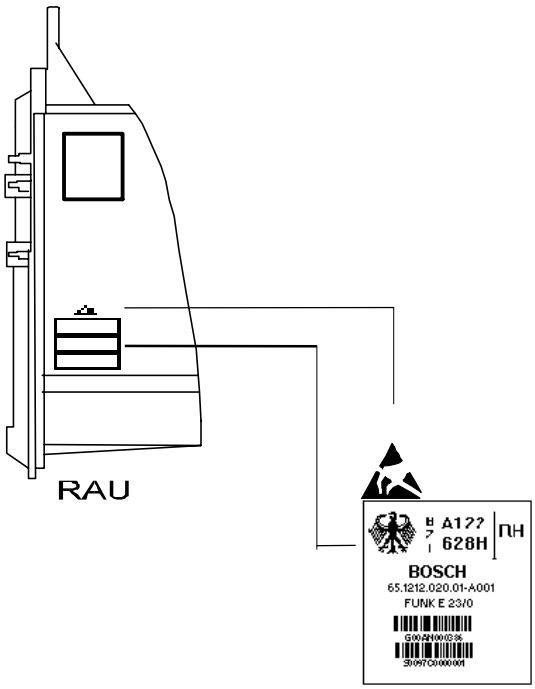

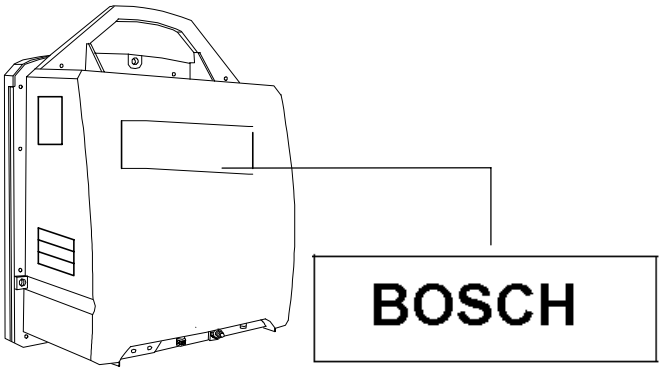

4.2.2 Positioning RAU2

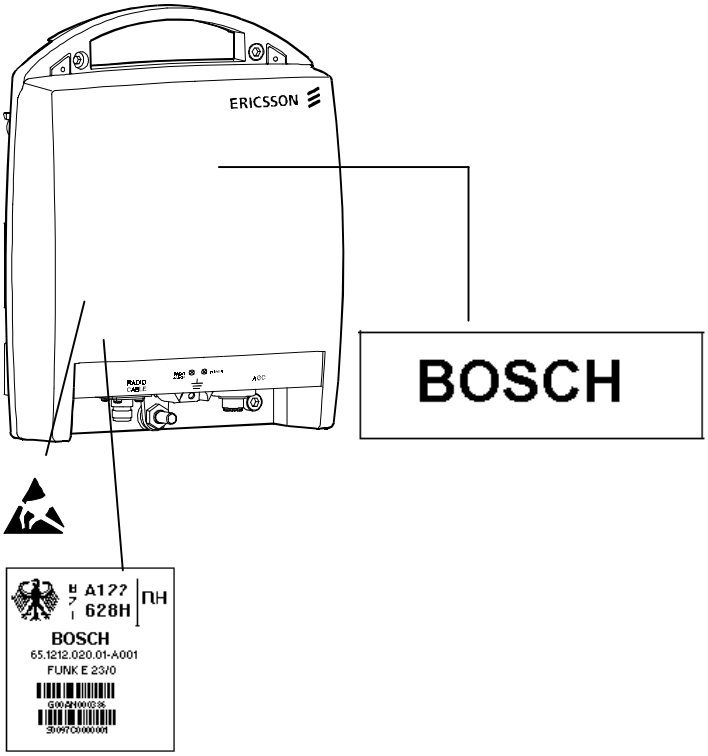

4.3 BOSCH INFORMATION

Table 4

Ordering code RA0701**XXX**/00	BOSCH-product code: 65.121**X.XXX**.01-001	BOSCH-ID number: G00AN000**XXXXX**	BZT-number. A**XXXXXX**H
148/00	9.245	69671	xxxxxxx
144/00	9.235	69670	xxxxxxx

Ordering code RA1501**XXX**/00	BOSCH-product code: 65.121**X.XXX**.01-001	BOSCH-ID number: G00AN000**XXXXX**	BZT-number. A**XXXXXX**H
061/00	1.010	38633	122628
068/00	1.020	38635	122628
161/00	1.030	42098	122628
168/00	1.040	42099	122628

Ordering code RA1801**XXX**/00	BOSCH-product code: 65.121**X.XXX**.01-001	BOSCH-ID number: G00AN000**XXXXX**	BZT-number. A**XXXXXX**H
114/00	7.075	89590	xxxxxxxx
118/00	7.085	89591	xxxxxxxx
111/00	7.015	69584	xxxxxxxx
115/00	7.025	69585	xxxxxxxx

Ordering code RA23**XXXXX**/00	BOSCH-product code: 65.121**X.XXX**.01-001	BOSCH-ID number: G00AN000**XXXXX**	BZT-number A**XXXXXX**F
01056	2.010	38637	120376
01058	2.020	38639	120376
10157	2.030	51819	120376
10159	2.040	51820	120376
10122	2.050	51821	120376
10124	2.060	51822	120376
10131	2.070	51823	120376
10133	2.080	51824	120376
10132	2.090	51825	120376
10134	2.100	51826	120376
10142	2.110	51827	120376
10144	2.120	51828	120376
10112	2.130	51829	120376
10144	2.140	51830	120376

Ordering code RA2601**XXX** /00	BOSCH-product code 65.120**X.XXX**.01-001	BOSCH-ID number G00AN000**XXXXX**	BZT-number A**XXXXXX**H
024	3.010	38642	122484
029	3.020	38644	122484
124	3.030	42100	122484
129	3.040	42101	122484

Ordering code RA38010**XX**/00	BOSCH-product code: 65.121**X.XXX**.01-001	BOSCH-ID number G00AN000**XXXXX**	BZT-number A**XXXXXX**F
13	4.010	38647	121686
17	4.020	38649	121686
12	4.030	51819	121686
16	4.040	51820	121686
14	4.050	51821	121686
18	2.060	51822	121686
11	4.070	51823	121686
15	4.080	51824	121686

4.4 CUSTOMER MARKING ACCORDING TO OPTION 63

The Rau shall not be marked with SVB 186 05/91, or any other customer trademark.

4.5 CUSTOMER MARKING ACCORDING TO OPTION 67

The MINI-LINK BAS shall be mark with label .LZF 401 1086 or label LZF 401 1079.

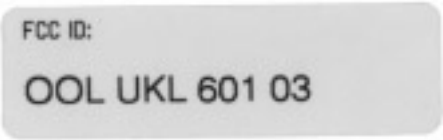

4.5.1 Position

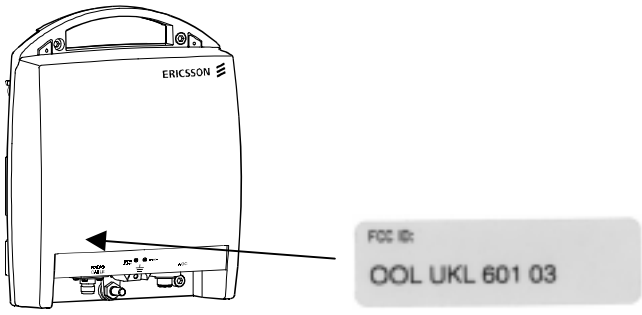

5 PACKAGING

Packaging MMU, The package shall be marked using the label LZF 401 1086 or LZF 401 1077. Table 5 shows the information on the label.

Table 5

	TEXT SIZE	TEXT	BARCODE	FIELD
- ERICSSON LOGOTYPE	3,0 (+-0,5)	YES	NO	1
- MINI-LINK	3,0 (+-0,5)	YES	NO	11
- TITLE a) TYPE	3,0 (+-0,5)	YES	NO	4
b) TRAFFIC CAPACITY	3,0 (+-0,5)	YES	NO	4
c) VOLTAGE	3,0 (+-0,5)	YES	NO	4
ORDERING CODE INC. INDEX	3,0 (+-0,5)	YES	NO	3
- SERIAL NUMBER	3,0 (+-0,5)	YES	NO	7
- ORDERING CODE	3,0 (+-0,5)	YES	NO	8
- POS	3,0 (+-0,5)	YES	NO	10
- REVISION STATE HARDWARE	3,0 (+-0,5)	YES	NO	2
- CE MARKING	3,0 (+-0,5)	YES	NO	9
- CUSTOMER REFERENCES	3,0 (+-0,5)	YES	NO	6
- Orderingcode in bar code		NO	YES	5

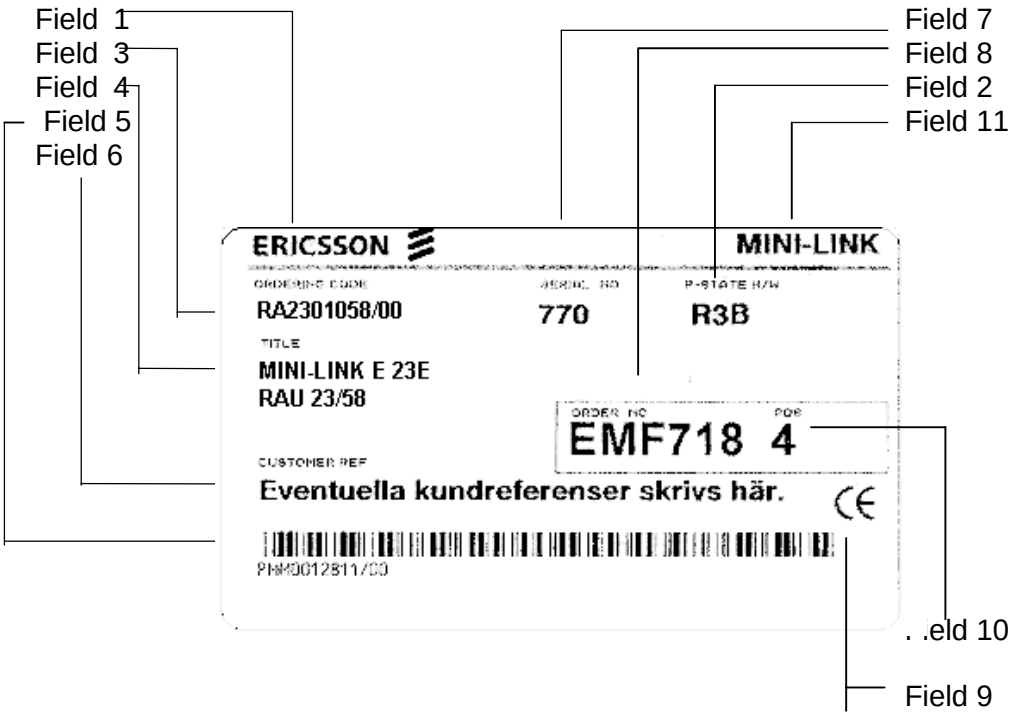

5.1 POSITIONING

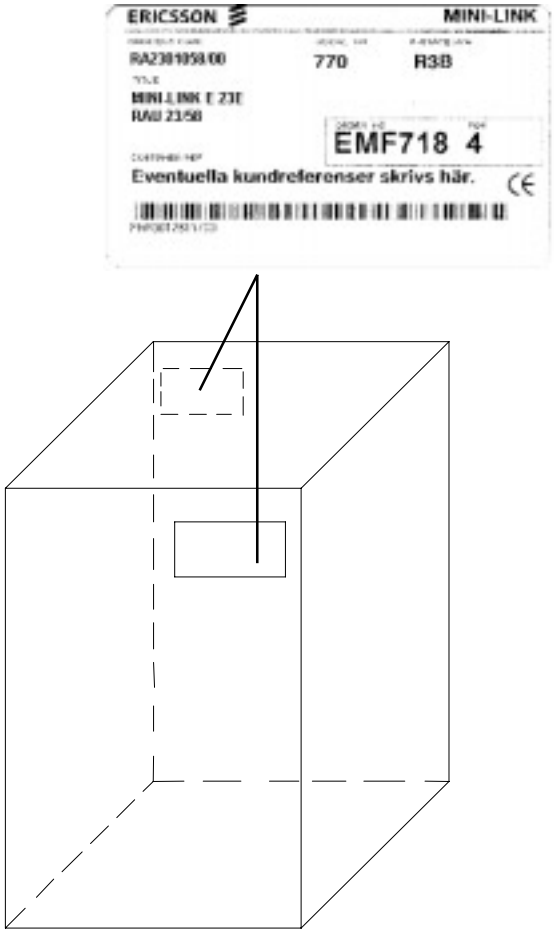

6 ANNEX

Changes between Rev G and Rev H

- Label in point 4.5 is changed.