1

MINI-LINK BAS Introduction

1.1 General Information

The new fields for application of microwave radio links introduce more demanding functional requirements as well as stricter requirements on operational performance. The transmission quality in terms of acceptable bit error ratio, availability, etc. is improved, as well as the spectral characteristics in order to permit effective utilization of the available bandwidth.

The scope of requirements in the form of directives, standards and recommendations issued by national and international organizations is constantly widening.

The MINI-LINK BAS meets these requirements. Performance data meets or surpasses the detailed requirements specified for this type of equipment.

1.2 Manual Structure

The *Technical Description* was prepared in order to satisfy the customer's need for information on the technical features of his equipment; it is composed of the following parts:

Contents
It includes the general contents of the chapters and possibly the analytical detail of contents.

Introduction
It consists of this section that describes in short the contents of the various parts composing the description and the list of acronyms and abbreviations.

Chapters
They supply all information necessary to understand equipment operation and technical characteristics. These are addressed to the network planner and operation personnel who will find the information they are interested in.

1.3 General Overview

The MINI-LINK BAS product family is member of ERICSSON's large and powerful product line for telecommunication. The combined expertise of ERICSSON, covering switching, cellular technology, radio and networking, means excellence in turnkey project management.

It is more than just an ATM cross-connect featured by a *point-to-multipoint microwave radio*. It is a complete system, including hardware, software, experience and competence. The MINI-LINK BAS integrates fully with existing telecom access networks, adding new levels of flexibility. It has proved to be a reliable communication medium, a highly competitive alternative to copper and fibre cable.

The MINI-LINK BAS is a natural step in ERICSSON's product development programme, in response to new requirements from a growing market and based on more than 20 years' experience of microwave links.

ERICSSON designers and engineers remain vigilant, seeking new technology and developments to keep MINI-LINK BAS at the forefront of microwave communications. Advanced Technology, constant product development of powerful functions, operational reliability and quality have resulted in the MINI-LINK BAS.

MINI-LINK BAS is a product for point-to multipoint and point-to-point connections, carrying multimedia traffic services and is designed primarily to meet increased demands for more efficient transmission systems in access networks.

1.3.1 Opportunities

The worldwide deregulation of the local loop market, the emergence of new wireless technologies, and an increased demand for new services, has created a great market opportunity for existing and new competitive access service providers.

Small and medium sized businesses have an increasing demand for data oriented services such as high speed Internet/Intranet access, LAN-LAN interconnect, IP services and T1/E1 leased line connections.

MINI-LINK BAS -*Broadband Access System*- offers the possibility to satisfy these needs, providing the medium for convergence between telecommunication, and datacom/IT (Information Technology) systems.

ERICSSON experience in building world class radio products coupled with clear market drivers such as LMDS (Local Multipoint Distribution System), has lead ERICSSON to define and develop our next generation ATM based digital microwave radio systems, for broadband radio access. The system is initially targeted for the business community supporting a large range of multimedia services.

A well designed wireless broadband access system, enables operators to provide rapid, cost efficient, flexible and reliable broadband access, without the need of a cost prohibitive and complex fiber access infrastructure. The system is efficient in both areas with high and low/medium penetration since the system is featured by a scaleable "pay as you grow" architecture.

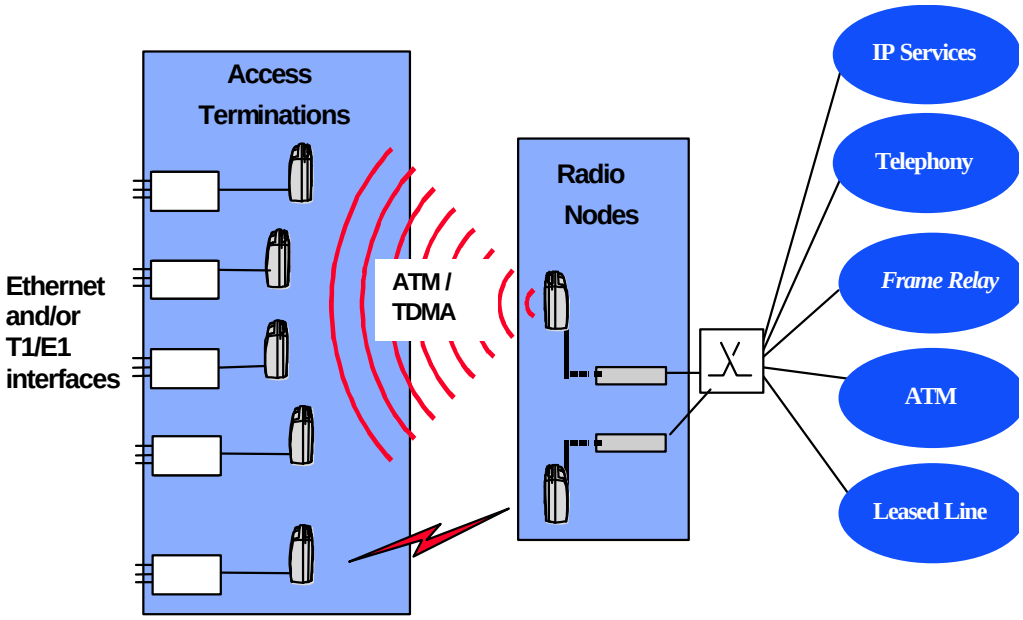

Figure 1. General applications for the Broadband Access System.

1.3.2 Product Benefits

The MINI-LINK BAS offers, to name a few, the following features:

- true F-DCA -*Fast Dynamic Capacity Allocation*- for data services;
- port-to-port, intra-hub, LAN and PBX interconnections without the use of core resources;
- symmetrical broadband F-DCA air-interface is independent in both directions;
- cost-efficient scaleable broadband access solutions (pay as you grow);
- rapid deployment and provisioning;
- reduced dependence on existing facilities;
- integration/convergence of different types of services such as IP traffic and telephony traffic.

The radio design is based on the same MMIC platform that is being developed for the immensely successful and reliable MINI-LINK family, deployed in more than 100 countries.

This digital microwave family has shown exceptional reliability with actual MTBF figures exceeding 30 years, thanks to a quality oriented high volume production, with a current production capacity exceeding 60,000 units per year. In the MINI-LINK BAS the new multi-chip MMIC module improves the reliability and simplifies production even further.

- The design is compact and integrated. The radio and antenna form an integrated outdoor part.
- Clean-cut concept; the outdoor part holds all frequency-dependent units and the indoor part holds all traffic management units.
- Single coaxial cable interconnection between outdoor and indoor parts.
- Software-aided Access Terminal (AT) configuration and setup.
- Centralized operation and maintenance system (by means of the EM –Element Manager-).
- High system gain and spectrum utilization with an advanced modulation process and coding.
- High MTBF figures of 20–30 years.

1.4 Terminology

ACT	AT Craft Tool
ANT	Access Network Termination
API	Application Programming Interface
AT	Access Termination
ATM	Asynchronous Transfer Mode
ATPC	Automatic Transmit Power Control
BAS	Broadband Access System
BRAN	Broadband Radio Access Network
C-AAS	Concentration Shelf (Concentration ATM Access Subrack)
CBR	Constant Bit Rate
CDMA	Code Division Multiple Access
CDVT	Cell Delay Variation Tolerance
CE	Circuit Emulation
CE Board	Network side Circuit Emulation card
CE-AAS	Circuit Emulation Shelf (CE ATM Access Subrack)
CP	Control Processor
CPE	Customer Premise Equipment
C-QPSK	Constant envelope offset Quadrature Phase Shift Keying
DP	Device Processor
DSL	Digital Subscriber Line
EM	Element Manager
ET	Exchange Terminal
ETSI	European Telecommunication Standardization Institute
FAS	Frame Alignment signal
FEC	Forward Error Correction
FCC	Federal Communication Commission
F-DCA	Fast Dynamic Capacity Allocation
FDD	Frequency Division Duplex
FDMA	Frequency Division Multiple Access
GUI	Graphical User Interface
HFC	Hybrid Fiber Coax
HH	Hardware Handler
HP-OV	Hewlett Packard OpenView
HTTP	Hyper Text Transport Protocol
ICS	Internal Communication System

IDU	Indoor Units
IMD	Interface Mediation Device
ISDN	Integrated Services Digital Network
LAN	Local Area Network
LLC	Logical Link Control
LMDS	Local Multipoint Distribution System
MAC	Media Access Control
MAN	Metropolitan Area Network
MIB	Managed Information Base
MLBAS	MINI-LINK BAS (Broadband Access System)
MMIC	Microwave Monolithic Integrated Circuit
MRI	Managed Resource Interface
MRS	Managed Resource Server
NCU	Node Control Unit
NE	Network Element
NMS	Network Management System (EM+CP)
NU	Network Unit
ODU	Outdoor Units
OPT	Open Telecom Platform
OSI	Open Systems Interconnection
PBX	Public Business Exchange
PDH	Plesiochronous Digital Hierarchy
PMP	Point to Multi Point
PSTN	Public Switching Telephone Network
PVC	Permanent Virtual Circuit
R-AAS	Radio Shelf (Radio ATM Access Subrack)
RARP	Reverse Address Resolution Protocol
RN	Radio Node
SC	Service Configuration
SNI	Service Network Interface
SNMP	Simple Network Management Protocol
SOHO	Small Office Home Office
SU	Service Unit (AT side)
SVC	Switched Virtual Circuit
TDD	Time Division Duplex
TDM	Time Division Multiplex
TDMA	Time Division Multiple Access

TMN	Telecommunication Management Network
UBR	Unspecified Bit Rate
UNI	User Network Interface
VBRrt	Variable Bit Rate real time
VBRnrt	Variable Bit Rate non real time
VC	Virtual Channel
VoIP	Voice over Internet Protocol
VP	Virtual Path
WAN	Wide Area Network

2

MINI-LINK BAS System Description

2.1 Introduction

The MINI-LINK BAS integrates ATM transport and microwave broadband technologies, allowing fast dynamic capacity allocation for user traffic. This permits the system to efficiently use the carrier bandwidth to support a wide range of medium to high-speed services.

It is a complete end-to-end solution from Customer service terminals, to IP/ATM/PSTN backbone equipment and management systems. This assures the quality, availability and security that ERICSSON Customers have come to depend on for over a century.

The MINI-LINK BAS consists of Customer located Access Terminations (ATs), communicating with Radio Nodes (RNs). User traffic is either transported to the Customer premises through a dedicated point-to-point connection (high capacity Customers and longer reach), or in a point-to-multipoint configuration.

The latter provides an efficient use of available spectrum, using statistical multiplexing over the radio interface. The Radio Nodes, housed in a Radio Shelf, communicate with an ATM concentrator via SDH/Sonet links.

Access Terminations (ATs), support a wide variety of services, from PBX interconnections to LAN-LAN interconnect and Internet access, providing different types of interfaces such as E1/T1, including fractional, and Ethernet 10/100BaseT.

The Customer located Access Terminations are designed with “hot plug-in” service interface cards for different service requirements, so new services are easily added without any impact on other services and without the need for a visit from a service engineer at the Customer premises.

The MINI-LINK BAS utilizes a C-QPSK/TDMA/FDD scheme (Constant envelope offset-Quadrature Phase Shift Keying/Time Division Multiple Access/Frequency Division Duplex). This results in a very compact and cost effective total solution, supporting Fast Dynamic Capacity Allocation (F-DCA).

This is required to efficiently support the fast dynamics in bursty packet switched data networks (IP traffic). C-QPSK is a robust modulation scheme, delivering exceptional carrier to interference (C/I) performance and healthy link budgets required in a fully built out system.

The MINI-LINK BAS is designed on a common ERICSSON platform for broadband access, providing a fully integrated end-to-end solution and supporting a wide range of access services.

The Access Terminations (ATs) for the different systems are similar for both HFC or xDSL solutions. The ATM multiplexers are common and all systems are supervised and managed from the same Network Management System (NMS) platform (see Figure 2. on page 3).

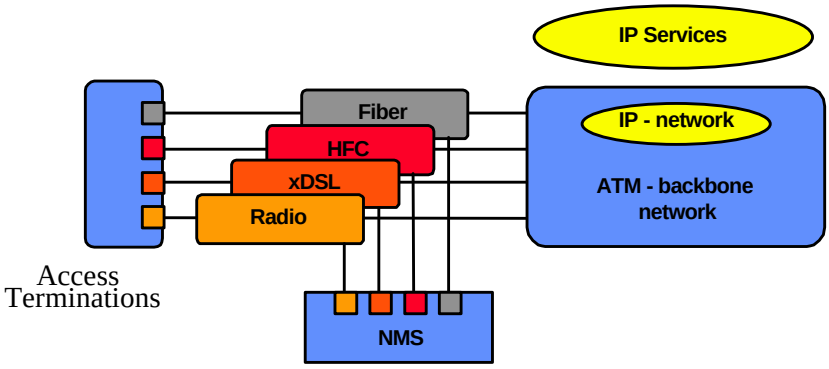

Figure 2. Common access platform.

2.2 System Components

The MINI-LINK BAS is an access solution based on point-to-multipoint microwave transport scheme, utilizing applicable frequency spectrum such as 27.5-28.35 GHz in US (LMDS “A” band) and 24.5-26.5 GHz band in Europe.

The core of the system is the robust ATM based access platform with network connectivity up to OC-3/STM-1 (155 Mbps) and TDM/TDMA based 37.5 Mbps symmetrical over-the-air interface to Access Terminations (ATs).

The MINI-LINK BAS follows cellular deployment structure where multiple cells provide foot print to a geographical area. Each cell contains a Hub with multiple Radio Nodes (RN) equipped with sector/directional antennas for point-to-multipoint and point-to-point connections using TDMA/TDM scheme.

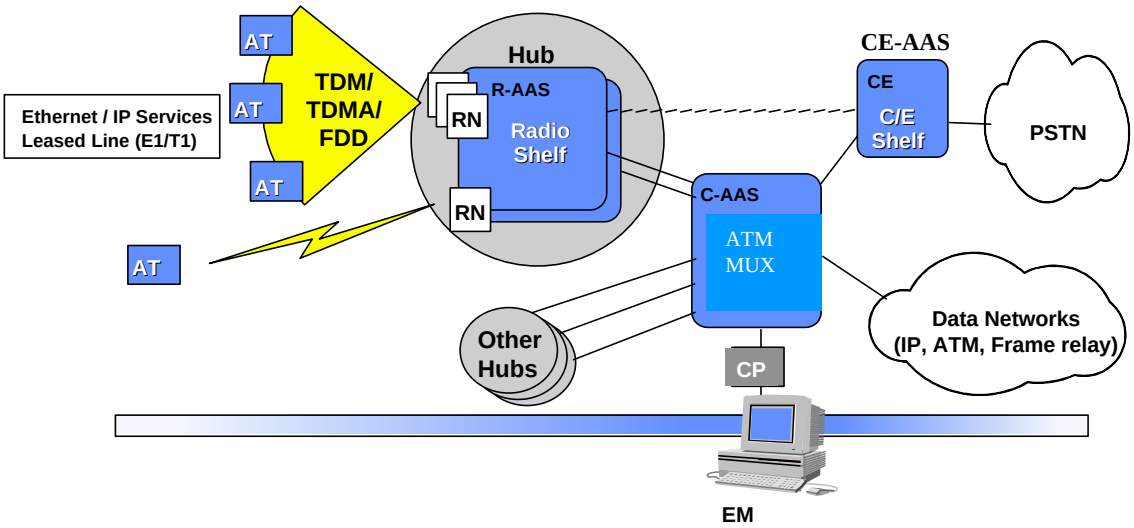

Figure 3. MINI-LINK BAS organization outline.

The Access Terminations (ATs) require Line-of-Sight (LOS) path toward the Hub and can be located anywhere within the sector coverage area (typically up to 6 km, in case of point-to-multipoint access, up to 10 km, in case of point-to-point access, also depending on operational frequency and rain zone).

The AT utilizes TDMA with F-DCA (Fast Dynamic Capacity Allocation) scheme to connect to the Hub, thus guaranteeing maximum utilization of the bandwidth.

The MINI-LINK BAS mainly consists of the following components:

- Access Network Termination (ANT), consisting of:
  - Hub equipment;
  - Concentration Shelf (C-AAS);
  - Circuit Emulation Shelf (CE-AAS);
  - Control Processor (CP);
  - Outdoor Unit;
- Access Termination (AT), consisting of:
  - Indoor Unit, also called Network Unit (NU), since it can support multiple users;
  - Outdoor Unit.

The MINI-LINK BAS is managed by via the Unix based Network Management System (NMS).

2.2.1 Access Network Termination (ANT)

The ANT is composed by the following components.

2.2.1.1 HUB Site

A Hub site can contain one or several Radio Nodes (RNs) plugged into one or more radio shelves (R-AASs). The radio shelves are connected through SDH/SONET (ET155) interfaces to a Concentration Shelf (C-AAS). As an alternative the ET155 can be replaced by ET34/45 (E3/DS3) interface card for smaller build outs.

Each Radio Node (RN) can be equipped either with a directional antenna for point-to-point applications or with a sector antenna for point-to-multipoint applications. The Concentration Shelf (C-AAS) and the circuit emulation shelf (CE-AAS) can co-locate at the Hub site or can be at a remote facility.

The Control Processor (CP), that provides the end-to-end Network Management, is connected via the Concentration Shelf (C-AAS) or directly to the radio shelf (R-AAS) for single radio shelf configuration.

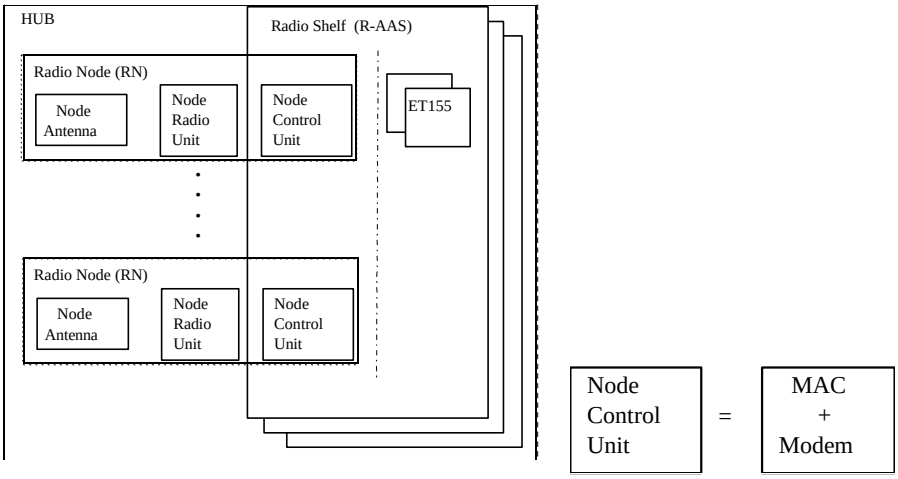

Figure 4. Hub block diagram.

2.2.1.2 Radio Node

The Radio Node consists of a node antenna, node radio unit and the node control unit (see Figure 5. on page 5). The node antenna is either a directive antenna for point-to-point applications or a sector antenna for point-to-multipoint applications.

A sector antenna and a RN create a sector carrier that typically covers an area up to 6 km in radius. Multiple sectors to increase the coverage area from a Hub, or to increase the capacity in a sector, are achieved by adding additional Radio Nodes, one per sector carrier.

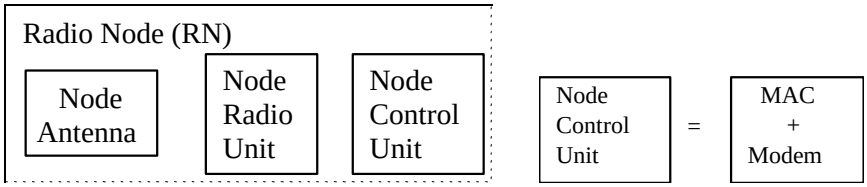

Figure 5. Radio Node block diagram.

The node antenna and the node radio unit are encased in a weatherproof outdoor mounted casing. The node radio unit is highly integrated and connected to the indoor mounted node control unit via an IF (Intermediate Frequency) cable.

The microwave parts incorporate ERICSSON's unique MMIC technology that supports integration of a complete receiver and transmitter into a single multi-chip module, thus reducing the size of the outdoor unit (see Figure 7. on page 7). MMIC technology also guarantees extremely good reliability and supports high-volume production.

The indoor mounted Node Control Unit consists of modem and MAC (Media Access Control) functions and is mounted as a plug-in unit in the Radio Shelf (R-AAS) at the Hub site.

The Modem part provides the IF interface towards the outdoor mounted radio and contains all modulating/demodulating functions. The modem is managing the radio system, providing control loops for frequency, timing and transmitter power.

The Media Access Control part connects directly to the backplane of the Radio shelf (R-AAS), and controls the dynamic allocation of resources over the radio path to each AT.

2.2.1.3 Radio Shelf

The Radio shelf is an indoor mounted sub rack that can accommodate up to six plug-in node control units (NCU: Modem+MAC), each connected to a RN dedicated to a sector. The traffic from up to six Radio Nodes is concentrated via the Cell-bus located in the back plane of the radio shelf and routed through the ET155 interface card (OC-3/STM-1) towards the Concentration Shelf or an ATM switch.

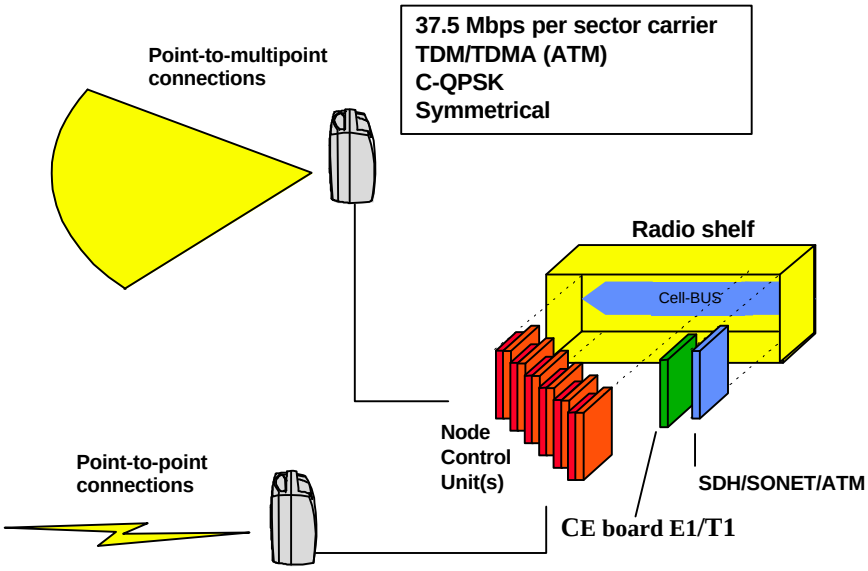

Figure 6. The Radio shelf.

The circuit emulated traffic, from various Radio Nodes, can be extracted directly from the Radio shelf via CE board E1/T1 interface card, plugged in the Radio shelf, or can also be routed to the PSTN network as shown in Figure 3. on page 3, where the CE-AAS shelf is connected via the Concentration Shelf (C-AAS).

The Radio shelf (R-AAS) provides a total of 16 board slots, which can accommodate up to 6 Node Control units each occupying two slots. One slot is dedicated for the shelf controller functionality, accomplished in the ET155 card, which also connects the Radio shelf to the Concentration Shelf (C-AAS).

The remaining slots can be used by ET155 cards or CE board E1/T1 (4 interfaces per card) cards etc. as mentioned above.

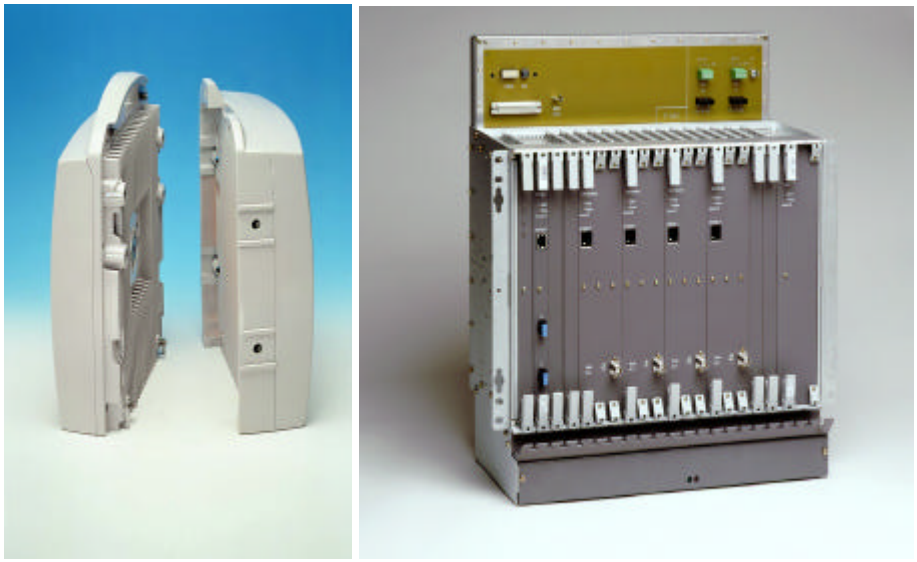

Figure 7. The prototype version of the Node Radio Unit, the antenna and the Radio Shelf (R-AAS).

2.2.1.4 Concentration Shelf (C-AAS)

Connection to external data networks is normally achieved via the Concentration Shelf as shown in Figure 3. on page 3 It is a subrack with slots for 16 boards and one power supply. One slot is dedicated to a ET155 card, providing shelf controller interface. The other slots can be utilized for connection to different Hubs, the CE-AAS shelf or other external networks.

The Concentration Shelf can be installed either physically at the Hub site, or at a remote location. It is connected to each Radio shelf with one or two SDH/SONET connections and can manage several Radio shelves, according to the traffic budget.

For larger networks requiring more Hubs than can be supported by one C-AAS, more Concentration Shelf can be added.

2.2.1.5 Circuit Emulation Shelf (CE-AAS)

Telephony traffic intended for PSTN network can be routed via the CE-AAS shelf as in Figure 3. on page 3, or optionally can be extracted directly at the Radio shelf via CE board E1/T1. The CE-AAS shelf provides slots for 16 plug-in cards and one power supply.

One board slot is used for Shelf Controller function via the ET155. The remaining slots are typically equipped by CE boards (up to 15), providing four E1/T1 interfaces per card.

2.2.1.6 Control Processor (CP)

The Control Processor (CP) constitutes the agent which carries out all the commands given in the NMS workstation (Network Management System, see Figure 3. on page 3), to realize mainly the alarm management, the equipment management and connection handler.

The EM workstation and the CP, both Unix based systems, are connected together although they are not always located in the same premises.

The CP can be either centrally located in the ATM network, or co-located with a C-AAS, adopting either in-band ATM based or dedicated Ethernet communication. The CP placement depends on the used communication variant, the operators' management and the control strategy.

The CP connects a number of system nodes (C-AAS shelves, the aggregated R-AASs and ATs) and stores all persistent data (e.g. configuration data, alarm logs, etc.). A CP and the controlled system nodes represent, in the management terminology, a NE (Network Element). Multiple NEs can be managed via a single EM.

2.2.1.7 Outdoor Unit

The outdoor unit contains a Node Antenna and a Node Radio Unit. It shares the same design as the AT outdoor unit. It is also based on ERICSSON's MMIC technology and highly integrated for high volume and low cost production.

The interface from the outdoor unit to the Node Control unit is an IF Cable. The Node Antenna, for point-to-multipoint connections, is a slot antenna with baffles; for point-to-point connections, it is a directive "Low Profile" parabolic type antenna.

2.2.2 Access Termination (AT)

ATs within a sector provide wireless connection to the ANT. Each AT receives traffic, on TDM scheme, from the Radio Node and transmits bursty upstream traffic in TDMA fashion (Time Division Multiple Access) sharing the total sector capacity (37.5 Mbps) with other ATs.

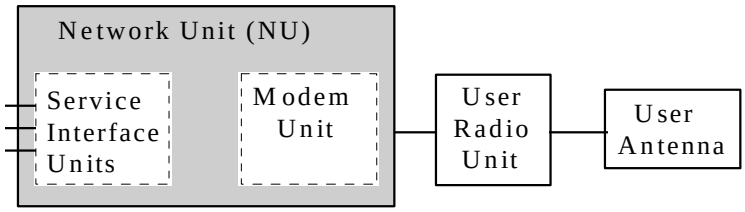

Figure 8. Access Termination (AT) block diagram.

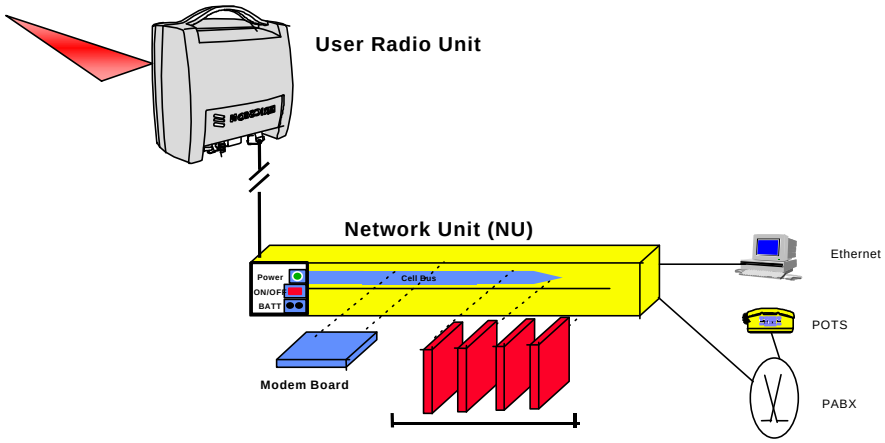

SU-E1/T1, SU-Ethernet

Figure 9. The Access Termination (AT).

Figure 10. The prototype version of the Access Termination: the User Radio Unit, the antenna and the Network Unit.

2.2.2.1 Network Unit (NU)

The NU at present supports different service types at each subscriber node by means of SU cards (Service Unit): SU-10/100BaseT Ethernet and SU-E1/T1 (2 interfaces per card). The NU is connected to the outdoor unit through the modem card via an IF cable (see Figure 10. on page 9).

Up to four service interface cards (SUs) can be inserted as plug-in modules in the NU, giving flexibility and upgradibility of services. In addition to the plug-in service interface slots, the NU is equipped with a built-in Ethernet 10BaseT interface and a power supply unit.

2.2.2.2 Outdoor Unit

The outdoor unit contains a User Antenna and a User Radio and it incorporates the same design as the Hub outdoor unit. This unit is also based on ERICSSON's MMIC technology and highly integrated for high volume and low cost production.

The interface from the outdoor unit to the Network Unit is an IF cable. The User Antenna is a directive "Low Profile" parabolic type, integrated within the casing of the outdoor unit.

2.2.3 Main Characteristics

MINI-LINK BAS can be configured with the following air capacity. Channel spacing may be chosen in agreement with the administration concerned.

Air Capacity (Mbps)	Channel spacing (MHz)
37.5	28

RF channelling allocation/air capacity is determined by the Radio unit and the Node Control Unit, ANT side, and by the Radio unit and the Network Unit, AT side.

The actual capacity available for each RN can be set by operator between 0 and 37.5 Mbps.

2.2.3.1 Operating Frequency

MINI-LINK BAS operating frequency is determined by the radio unit. The frequency plans are included in Technical Data.
Air capacity is identified for the frequency band. The MINI-LINK BAS radio units are currently available in the following frequency bands.

Frequency bands (GHz)	Frequency range (GHz)	Duplex distance (MHz)	Channel spacing (MHz)
ETSI 26 GHz	24.5-26.5	1008	28
LMDS 28 GHz	27.5-28.35	420	28

The frequency is synthesizer controlled. Each frequency variant of the radio unit covers a sub-band of the frequency band and has a fixed duplex distance (difference between transmitted and received frequencies). The width of the sub-band covered by a specific version depends on the frequency band according to the table above shown.

The operating frequency is set on site. This is done via Element Manager (EM), on ANT side (by NMS), and by means of the ACT (AT Craft Tool), during the AT installation phase, on AT sides.

2.2.3.2 Bandwidth Allocation

In the MINI-LINK BAS the operator can establish connections, from the AT to the backbone, by defining ATM PVCs' (up to 4000 PVC per Control Processor) with a specific bandwidth and class of service. The use of ATM as a transport mechanism allows statistical multiplexing over the radio interface and the support of services with various priorities.

Depending on the type of service, the MINI-LINK BAS dynamically retrieves the queue status at the AT and assigns a variable bandwidth to the service. For E1/T1 services, the system terminates the E1/T1 physical layer, maps the n*64 kb/s into ATM cells and handles the circuit emulated traffic dynamically as a CBR service class.

IP traffic is normally handled in a UBR service class, which dynamically allocate the maximum available bandwidth to the specific terminal.

Real Time IP traffic may be mapped on CBR service class. The Media Access Controller (MAC) protocol of the MINI-LINK BAS guarantees the fairness of the system with respect to services and ATs.

The MAC uses both up-stream and downstream frames in order to allocate dynamically the available capacity to different ATs. Both the up-stream and down-stream traffic is divided into Time Slots. The Time Slots are synchronized in the up-link and down-link as shown below, in Figure 11. on page 12

Periodically the queue status for each Class of Service, in every active AT, is polled by the MAC in the Radio Node. This is indicated in Figure 11. on page 12as G_i or queue status grant. Each AT then responds during a fraction of a time-slot (mini-slot), informing the Radio Node about the actual traffic load in each queue (CBR and UBR).

The MAC then issues grants G to the ATs, for sending traffic, according to a priority scheme. The queue status polling period (indicated as the MAC frame in Figure 11. on page 12), is configurable and can be as short as 0,25 ms, resulting in low delay transfer and cell delay variation.

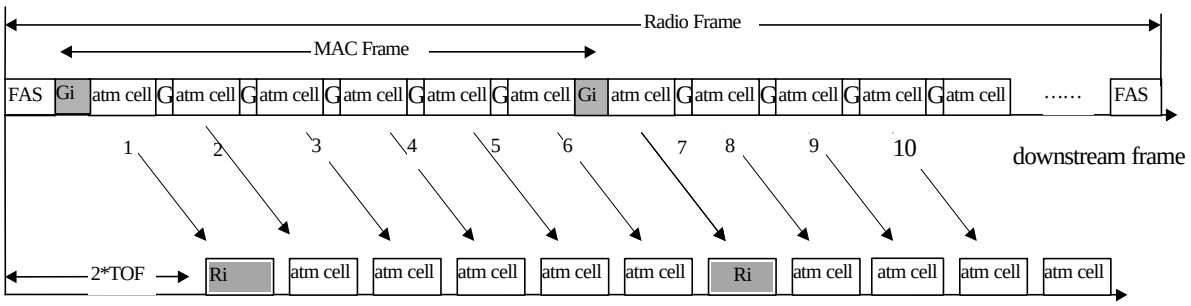

G=ATM traffic grant
Gi= ATs queues status grant
Ri= ATi queues status
TOF_m=maximum Time Of Flight
FAS= Frame Alignment Signal
Radio Frame= time between two unscrambled FAS

Figure 11. Up-stream and down-stream frames.

2.2.3.3 System Interfaces

The system is featured by means of the following primary physical interfaces:

Intra-system interfaces

ET34/45
PDH, 34/45 Mbps, full duplex, electrical interface.

ET155
SONET/SDH, 155 Mbps, full duplex, electrical and optical interfaces.

Radio interface
37.5 Mbps gross bit rate, full duplex using C-QPSK modulation scheme.

Customer Service Interfaces

10BaseT/100BaseT Ethernet
IEEE 802.3, packetized, 10/100 Mbps, half duplex, electrical interface with bridging (RFC 1483) functionality.

2xT1/DS1 (structured/unstructured) -SU-T1-
ITU G.703/704, TDM, 1.544 Mbps, full duplex, electrical interface.

2xE1 (structured/unstructured) -SU-E1-
ITU G.703/704, TDM, 2 Mbps, full duplex, electrical interface.

Local Exchange/ISP Interfaces

ET34/45
PDH (ITU-T G.703), 34/45 Mbps, full duplex, electrical interface.

ET155
SONET/SDH, 155 Mbps, full duplex, electrical (ITU-T G.703) and optical (ITU-T G.957 S1-1.1) interfaces.

4xT1/DS1 (structured/unstructured) -CE Board T1-
ITU-T G.703/704, TDM, 1.544 Mbps, full duplex, electrical interface.

4xE1 (structured/unstructured) -CE Board E1-
ITU-T ITU G.703/704, TDM, 2 Mbps, full duplex, electrical interface.

2.2.4 Operation and Maintenance Features

The MINI-LINK BAS is managed by means of a Network Management System (NMS) comprising of an element manager (EM). The EM communicates with the hardware via a Control System. The Control System itself consists of a CP, Device Processors (DP) and related software.

It is controlled by a management system comprising of an EM and it is integrated with management systems on the service and network management layer through interfaces provided by an interface mediation device (MINI-LINK BAS IMD).

This management solution supports both a low-level entry point deployment, suited for a small network, but provides also excellent support for large scale deployment with integration of network and service management systems.

Depending on the network size and operator needs the actual management solution can consist of EM only or a combination of EM and IMD.

The functionality of the Element Manager is implemented by means of a number of applications, each handling a specific management area. The applications provide graphical user interfaces, through which an operator can manage resources in the network elements (NEs).

The applications are based on the OPT (Open Telecom Platform) and HP-OV NNM (Hewlett Packard-Open View, Network Node Manager) platforms. OPT is a control system platform developed for telecom application. HP-OV NNM provides support for fault, configuration and performance management.

SNMP is available for communication between the EM and a SNMP Agent in the Control Processor. The MINI-LINK BAS can be managed in an integrated network view with other network elements, via an upper management system.

The EM consists of a management server, located in the maintenance centre and communicates with the CP. The control processor connects to a number of system nodes (C-AAS, the aggregated R-AAS, CE-AAS and ATs) and stores all persistent data (e.g. configuration data, alarm logs, etc.). A CP and the system nodes forms a NE; multiple NE can be managed via a single EM.

Communication between the EM and the NE is SNMP version 1, using the UDP/IP protocol over an IEEE 802.3 Ethernet network (10Base2 or 10BaseT). Support for TCP/IP, FTP (File Transfer Protocol) and telnet are required for file transfer (for backup and restoration of the database, software releases etc.).

If the NE resides outside EM LAN, it is Customer responsibility to provide a MAN/WAN connection. Estimated bandwidth on the link between EM and NE is a minimum of 128 kbit/s, for a single NE and a single operator.

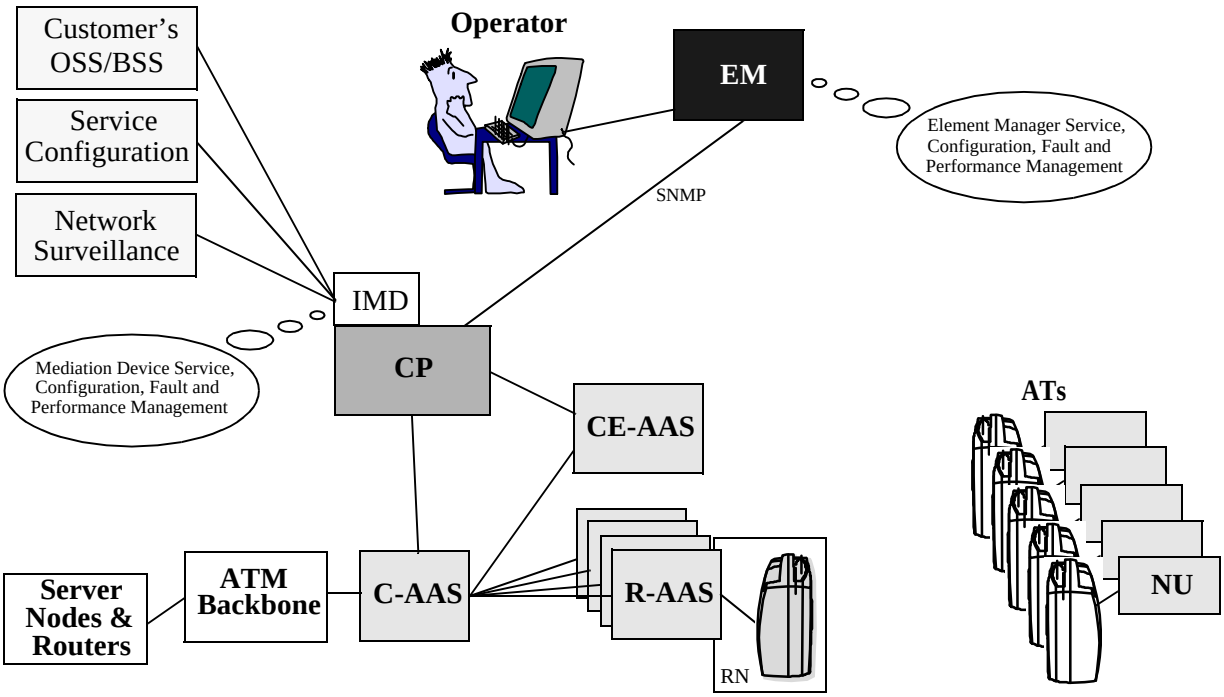

Figure 12. Management System Architecture.

2.2.4.1 Equipment Handling

The configuration information in MINI-LINK BAS is stored in a MIB (Management Information Base). The initial configuration is loaded in the MIB from configuration files. Any boards or other equipment that is inserted into the system, is detected and automatically initiated.

In MINI-LINK BAS EM, the following functions are provided to the operator:

- add/remove subracks and boards;
- list system nodes, subracks, slots and boards. Both overview and detailed information is provided.

In the overview a graphical representation of the subrack with board fronts is provided. The interconnections between subracks are also provided. The detailed information for a:

- system node: including name and location;
- subrack: including name, location and alarm status;
- slot: including board identity, management and alarm status
- board: including type, HW/SW identity, operational and alarm status;
- port: including port identity, administrative status, operational status and usage;

- modify system nodes, subracks, slots, boards and ports;
- manage and unmanage slot;
- activate and deactivate board and ports;
- add/remove radio node configuration:
  - radio node identity;
  - identities of controlled Access Terminations;
  - transmit/ receive frequency;
  - output power;
  - alarm thresholds.

2.2.4.2 Software Handling

MINI-LINK BAS EM supports remote download of new software. The operator can, using the UNIX file transfer protocol (FTP), download the new software to the control processor (CP).

The operator can then open a telnet session (involving the standard UNIX log in procedures), with the control processor and issue the command to load the new software to the control and distributed processors.

Local software download, at the AT, is available through the ACT when the AT is not connected to the RN. The MINI-LINK BAS software is divided into three different areas:

- operator interface (Element Manager)
- real-time surveillance, operation and recovery (Control System)
- device specific software.

The Control System comprises software running on a CP, on DPs and on Board Controllers (BCs). The following figure shows the processor hierarchy and the interfaces.

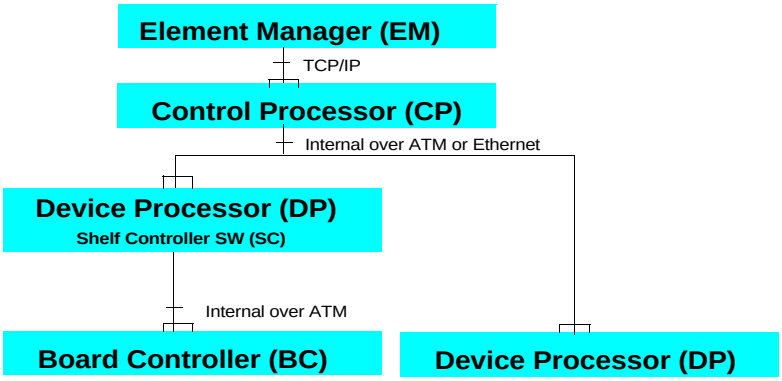

Figure 13. Processor hierarchy and interfaces.

2.2.4.3 Connection Handling

MINI-LINK BAS EM supports the setup of ATM cross-connections, through a system node, at VP or VC-level. The following functions are provided to an operator.

- Create and delete VP/VC cross-connection. The operator specifies termination points, bandwidth and quality of service.
- Activate and deactivate VP/VC cross-connection
- List VP/VC cross-connections.
- Create and delete traffic descriptor.

The traffic descriptor contains default values for traffic parameters. Traffic descriptors can be specified for different services and used to simplify the creation of a cross-connect.

2.2.4.4 Fault Management

Events generated in the Network Element (NE) may be presented at the MINI-LINK BAS EM. The events are divided into the following types:

- Alarm: indicates that a fault is detected or cleared.
- Plain Event: includes state change of a resource, creation/deletion of resources.

All events have the attributes type, originating resource and time stamp. Alarms also have the attributes category (undefined, communications, quality of service, processing, equipment and environmental) and severity (indeterminate, critical, major, minor, warning and cleared).

Events are spontaneously reported to the MINI-LINK BAS EM and are also logged. Active alarms are stored in a current alarm list. The following functions are provided to an operator:

- **List current alarms**. All alarms that are currently active in the NE are listed. It is possible to specify the criteria (category, severity and time interval) for the alarms to be listed.
- **List logged events**. Event of all types, that are generated since the system was started, are presented. It is possible to specify criteria (name, alarm severity and time interval) for the events to be listed.
- **List events**. All events, that are generated since the event application was opened, are presented.
- Display details for an event instance.
- Activate and deactivate logging and reporting for an event.
- Change severity for an alarm.

MINI-LINK BAS EM presents also current alarm status for equipment of type subrack, slot and board.

2.2.4.5 Performance Management

The MINI-LINK BAS EM provides ATM performance counters per ET155 board. The accumulation intervals are 15 minutes and 24 hour. Counters for the previous interval are also available.

The counters implement protocol monitoring and measurement of traffic load, and congestion, according to Bellcore GR-1248 on Corrected HEC, Uncorrectable HEC, Received, Transmitted, etc.

Over the Radio hop the EM provides traffic and error counters per AT link. The EM provides the following functions to the operator:

- start and stop of monitoring (counting);
- view the counter values;
- log the counter values and present the result in a histogram;
- set alarm thresholds.

2.2.4.6 Test Management Application

The MINI-LINK BAS EM supports physical loops at I/F and R/F levels, both RN and AT side.

2.2.4.7 Service Management

The EM supports establishment of Circuit Emulation (CE) connections, e.g. association between a E1/T1 channel and the corresponding termination point at the AT, both provided by the operator.

2.2.4.8 Security Management

Different functions are implemented to countermeasure improper use, fraud and eavesdropping of the system. Authentication of a new AT is done by a handshaking mechanism between the network management system and the AT. For IP traffic, the Edge Router handles authentication (RADIUS server functionality) of the user prior access to services.

The MINI-LINK BAS is by nature hard to eavesdrop due to the frequency band, TDM/TDMA/FDD structure, modulation scheme and scrambling sequence. To enhance the protection against eavesdropping a security key is used. The security key will then force both up- and downlink to be uniquely scrambled.

Security management in the MINI-LINK BAS EM is UNIX based and the security functions are provided by the log-in procedure. In the EM there will be four different levels of accessibility to which a configured user can be associated:

- **System administrator**. The user can access MINI-LINK BAS EM windows and is able to change any parameters. The user can also create, delete or modify user definitions in the EM.
- **Normal**.The user can access MINI-LINK BAS EM windows, and is able to change any parameters.
- **Observer**. The user can access all MINI-LINK BAS EM windows, but is unable to change any parameters.
- **Custom**.The user can access to certain functions and areas as a Normal user and to other as an Observer.
- Connection to the AT, for O&M purposes, through the ACT is protected by password.

2.2.4.9 Interface to other Management Systems

The optional product IMD (Interface Mediation Device) provides interfaces towards other management systems. The major functions of MINI-LINK BAS IMD can be grouped in the following three categories:

- interface to Service Configuration system, SC/Internet;
- interface to integrated Fault Management system: Network Surveillance, NS;
- platform to build new interfaces on towards any management system.

The platform is used to build Customer-specific interfaces, as market adaptations, in order to connect to the Customer's own network or service management system.

2.2.4.10 Access Termination (AT) Line-up

After physical installation, the AT requires a minimum of software installation set up before it can be taken into operation:

- transmit/receive frequency;
- terminal identity (Customer identity);
- identity of controlling Radio Node (RN);
- local test before installation into the network.

The ACT (AT Craft Tool) is a portable PC (note-book) with software that communicates with the AT. The ACT is used for the installation steps above mentioned. All other configurations are performed automatically by the CP in the MINI-LINK BAS EM.

2.2.5 Installation Flexibility

The Radio unit and the antenna are easily installed on a wide range of support structures. The Radio unit is fitted directly to the antenna without a waveguide feeder.

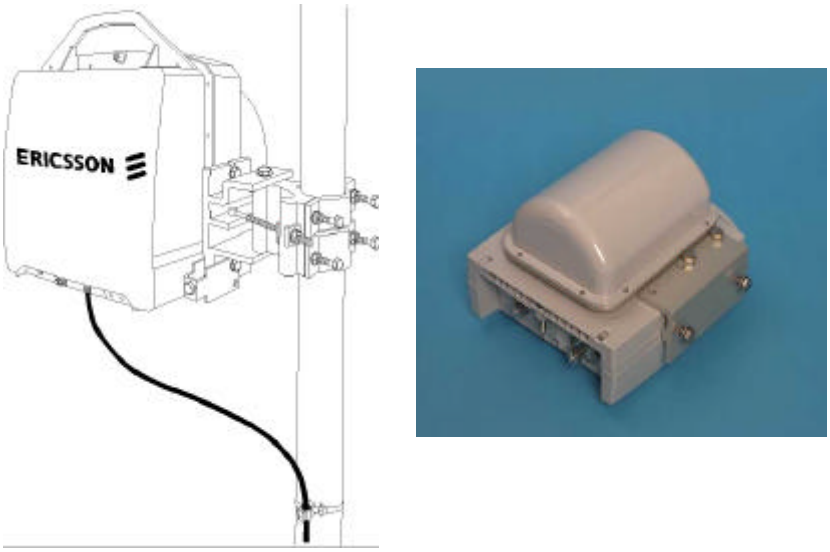

Figure 14. The Radio unit fitted directly to a 0.3m antenna, for point-to-point connections, and to a sector antenna prototype, for point-to-multipoint connections.

The Radio unit and the antenna can also be fitted separately and connected via a flexible waveguide. In both cases, the antenna is easily aligned and the Radio unit can be disconnected and replaced without affecting the antenna alignment.

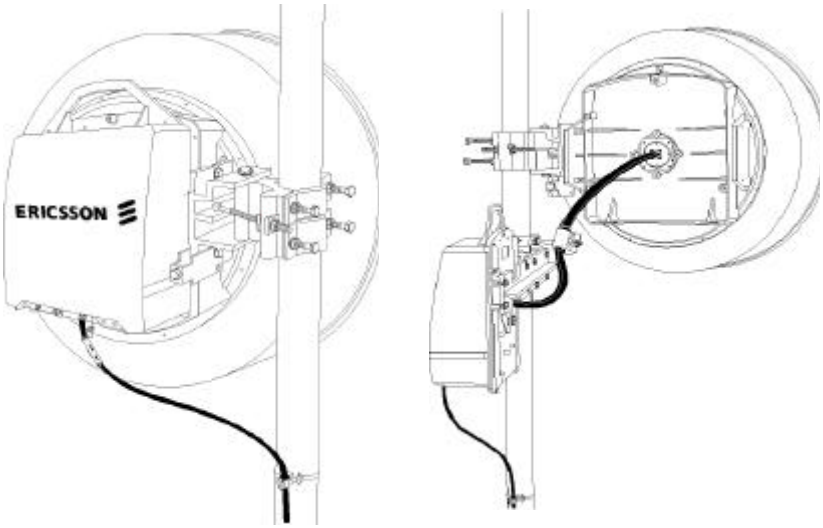

Figure 15. The Radio unit and a 0.6m antenna fitted directly and separately.

The indoor parts are fitted in 19” racks, in ETSI and ANSI cabinets ANT side and in 19” rack, in ETSI and ANSI cabinets or on the wall directly, AT sides.

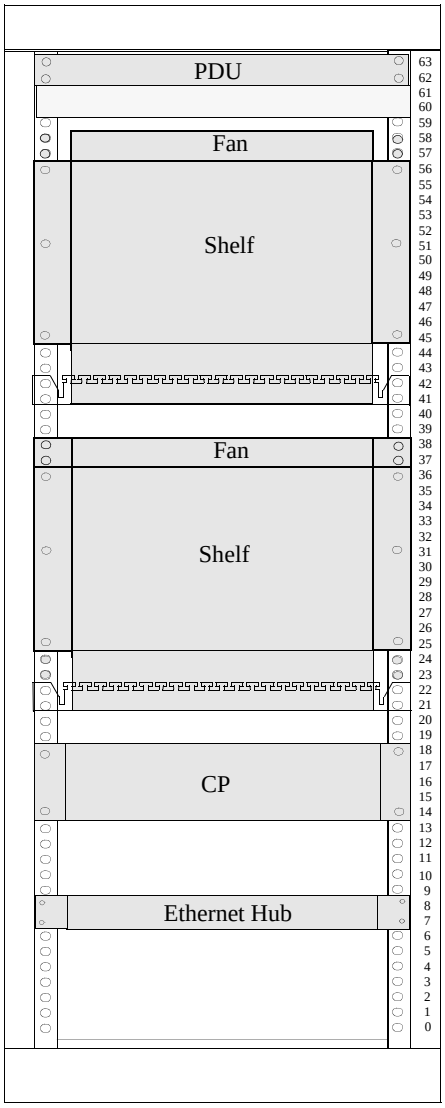

Figure 16. ANT Indoor part fitted in a 19” rack example.

The interconnections between the Outdoor parts (Radio unit and antenna) and the Indoor parts is a single coaxial cable carrying full duplex traffic, DC-supply voltage, ON/OFF transmitter signal (AT side only), service traffic as well as operation and maintenance data.

Figure 17. Example of indoor cabinet.

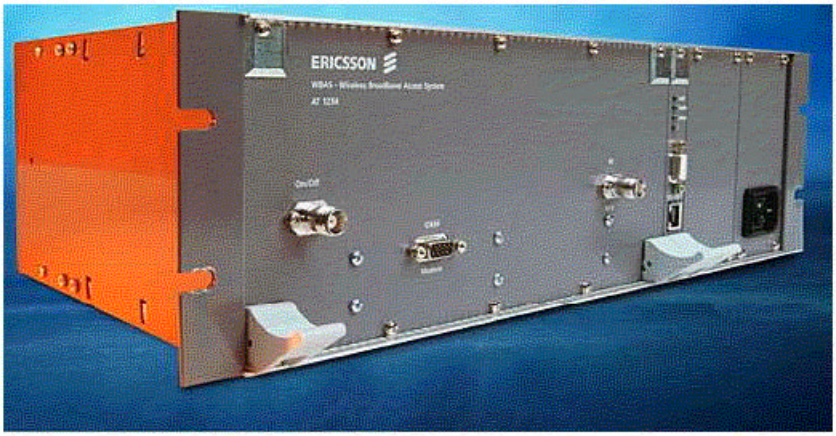

Figure 18. Network Unit (NU) prototype for in-rack or on-wall installation, AT side only.

2.2.6 Typical Network Applications

The MINI-LINK BAS, thanks to its F-DCA technology and to the flexible ATM based access platform, is a highly competitive solution to achieves Customer needs in the access networks.

Telephony is a service supported by the MINI-LINK BAS since the end user requires service integration on the access networks. The implementation of traditional telephony services is shown in Figure 19. on page 23

Typical small and medium businesses have a PBX running on either analog or digital lines. To support analogue telephony services, the operator augments the AT functionality with a Channel Bank. A digital PBX interfaces directly to SU-T1/E1 AT interfaces.

An ATM virtual connection links the AT's interface to the CE-AAS shelf, where the ATM traffic is terminated and the data is delivered to the PSTN. Even if this service provides quality equivalent to wired technologies, the advantage of the statistical multiplexing capability of the MINI-LINK BAS is not fully exploited.

Note however that the intra-hub port-to-port connection functionality of the system, largely reduces the load on the ATM mux/switch and on the core network when local interconnections are needed.

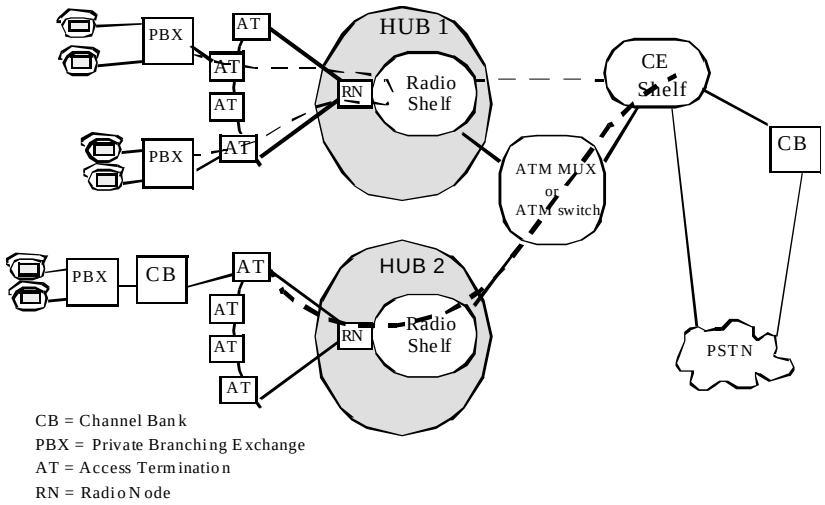

Figure 19. System deployed for telephony (PBX-PSTN, PBX-PBX)

An alternative solution to the conventional voice transportation is offered by the Voice over IP (VoIP) technology. The MINI-LINK BAS deployed for VoIP is shown in Figure 20. on page 24

In such a scenario the IP packets, containing telephony information, are handled by the system as data packets, optionally with a higher priority.

This solution has the advantages of: no capacity is permanently reserved in the system and a convergence of the Customer data and telephony service is achieved.

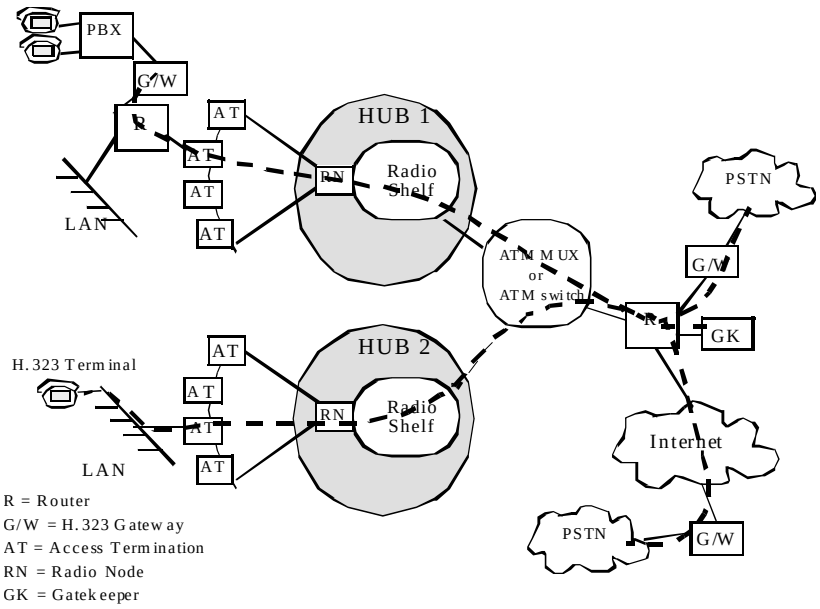

Figure 20. System deployed for IP telephony (PBX-PSTN, PBX-H.323 terminal).

Data traffic is handled by the MINI-LINK BAS in an analog manner. Depending on the equipment at the Customer premises, the data traffic is either bridged or routed at the MINI-LINK BAS inputs.

Typically an edge router, at the Central Office, provides the operator with multiple ISP access, billing and security options for Internet and Intranet solutions.

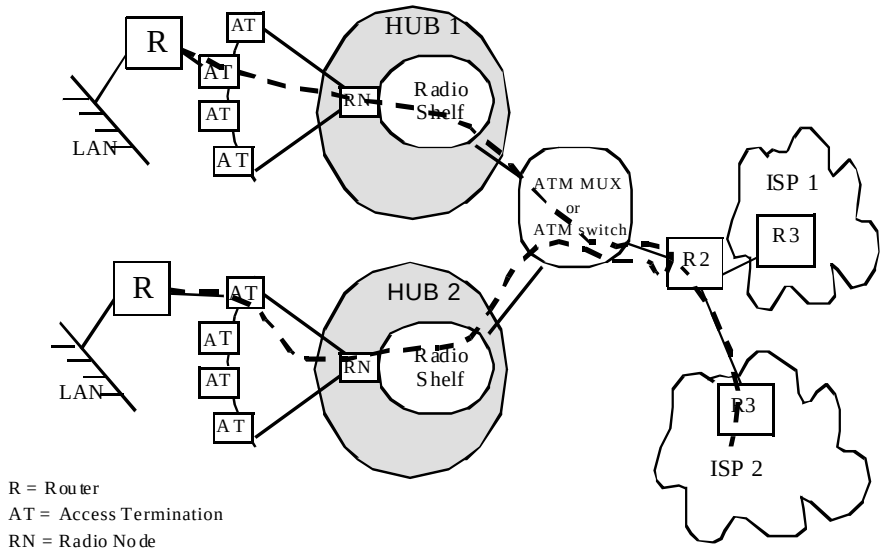

Figure 21. System deployed for data traffic and multiple IP selection.

2.2.7 System Functions

The MINI-LINK BAS provides broadband multimedia access to both medium and small business users. The system is being developed for telecom operators who want to increase their service offering by having a wireless broadband access network could connect using an ATM based transport.

The services supported by the system are high speed Internet-Intranet data communication, LAN-LAN interconnection, IP services and E1/T1 leased line/PSTN connections.

2.2.7.1 End User Services

The MINI-LINK BAS provides the Customer with:

- Internet-Intranet interconnection;
- LAN-LAN interconnections;
- IP services;
- E1/T1 leased line/PSTN connections.

They can be provided simultaneously. The telephony service is not directly supported but by means of external pieces of equipment as PBXs, for example.

2.2.7.2 Network Element Functions

The basic network element functions are related to the transport and the control as well as the equipment practice and power. This is described in the following chapters:

- ATM transport and multiplexing;
- equipment practice and power;
- management and control;
- physical and MAC layers;

How to combine the NE functions into an access network is described in the Network Architecture chapter. The NE is identified according to the ITU definitions, CP included, of course.

2.2.7.3 Implementation Structure

The MINI-LINK BAS consists of several components: NMS (EM), ANT (CP, C-AAS, R-AAS, CE-AAS) and ATs.

- The NMS performs operation and maintenance of up to max. 10 NEs (CPs).
- The CP can control several hundred ATs.
- The ANT consists of a number of ATM access subracks (AAS) that each concentrate traffic interfaces into one transmission interface. One AAS shelf is used to concentrate the traffic further using ET155-ET34/45 interfaces.

An ANT is an entity that consists of a number of AAS's. According to the previous paragraphs, different versions of the AAS exist. R-AASs (Radio-AAS), C-AAS (Concentration-AAS), CE-AAS (Circuit Emulation-AAS).

Typically the R-AAS contains Radio Nodes (RN), ET interfaces and, if any, CE boards; the C-AAS contains ET interfaces and, if any, CE boards; the CE-AAS, if any, contains ET interface and CE boards.

These AAS shelves could be interconnected in different manners into a System Node, which is a logical entity (please refer to the Network Architecture chapter). The System node is what the NMS operator sees when making ATM cross-connections corresponding to the C-AAS with all R-AASs, CE-AASs and ATs of the equipment.

The CP is not part of the System Node. The operator sees it as a black box and could connect the end-points (the user port and the service port) of the system node without interruption of the internal links.

2.2.7.4 Hardware Structure

The system is built around the R-AAS (ATM Access Subrack belonging to the Radio Node structure) which is a 19 inch rack that can mainly contains up to 6 NCU boards (MAC+Modem), and one/two ET board(s) connected to an ATM cellbus.

The traffic coming from up to 6 RNs is sent to one single ET155, or ET35/45, towards the ATM backbone network or a C-AAS (if any).

The ET boards contain a 155 Mbps link that carry ATM direct to the ATM backbone or connected to a C-AAS or to a CE-AAS shelf. The C-AAS has 16 slots that can be used for ETs and CE boards.

The CP and EM can be remotely or locally interconnected, by ATM network using an ET155 port, or by a 10BaseT Ethernet connection, using an Ethernet Hub.

The AAS shelves could be housed in different cabinets (ANSI and ETSI) and, according to the equipped ET type (optical or electrical interfaces), it is possible their remote locating in the required network

architecture. However the normal placement, for the R-AASs, is at the HUB level (see previous sections).

The Concentration Shelf can be installed either physically at the Hub site, or at a remote location. It is connected to each Radio shelf and can manage several of them, according to the traffic budget.

The system also contains a Control Processor (CP) that controls and maintains all different AASs, in the MINI-LINK BAS, under the EM supervision.

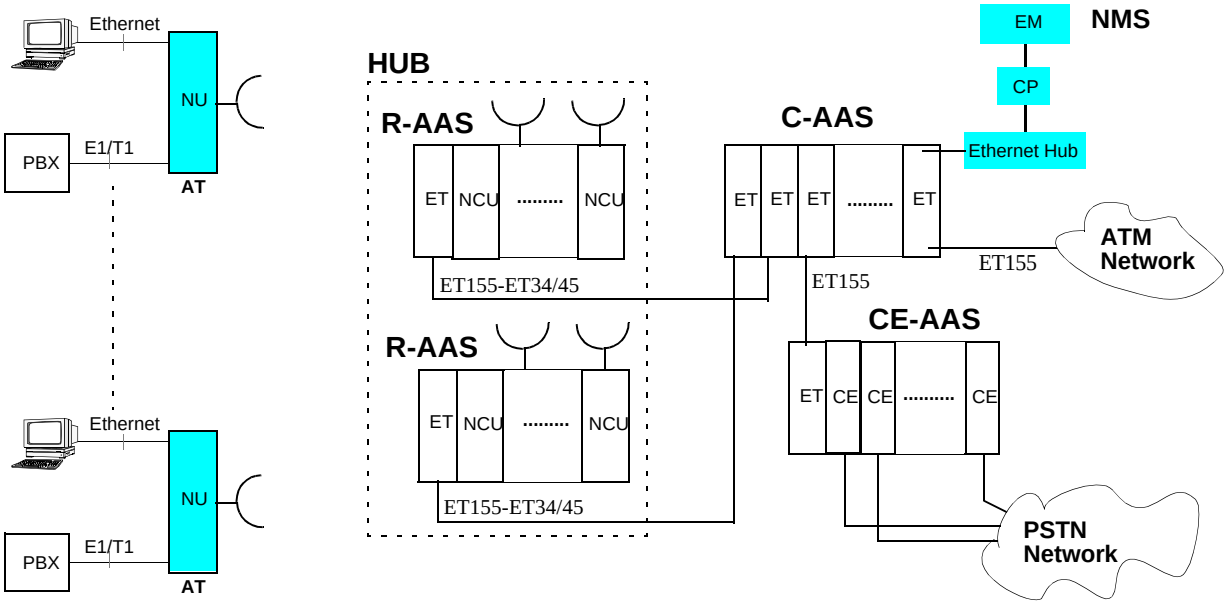

Figure 22. Equipment architecture example 1

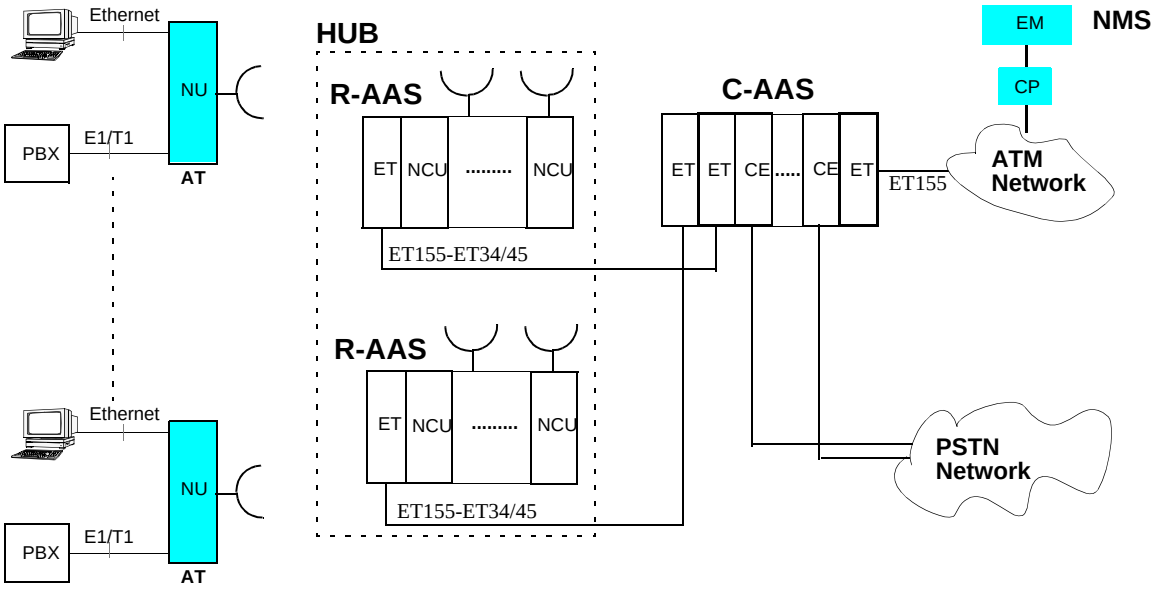

Figure 23. Equipment architecture example 2

The C-AAS and the R-AAS shelves can be equipped by means of the CE boards E1/T1 too.

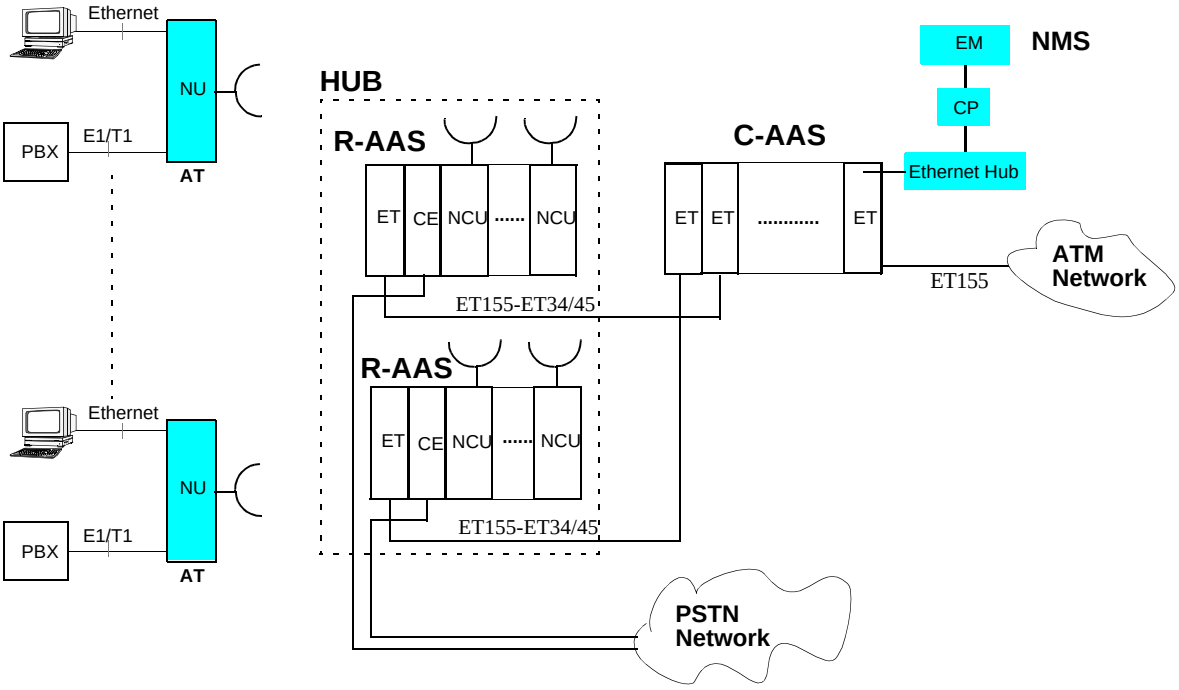

Figure 24. Equipment architecture example 3.

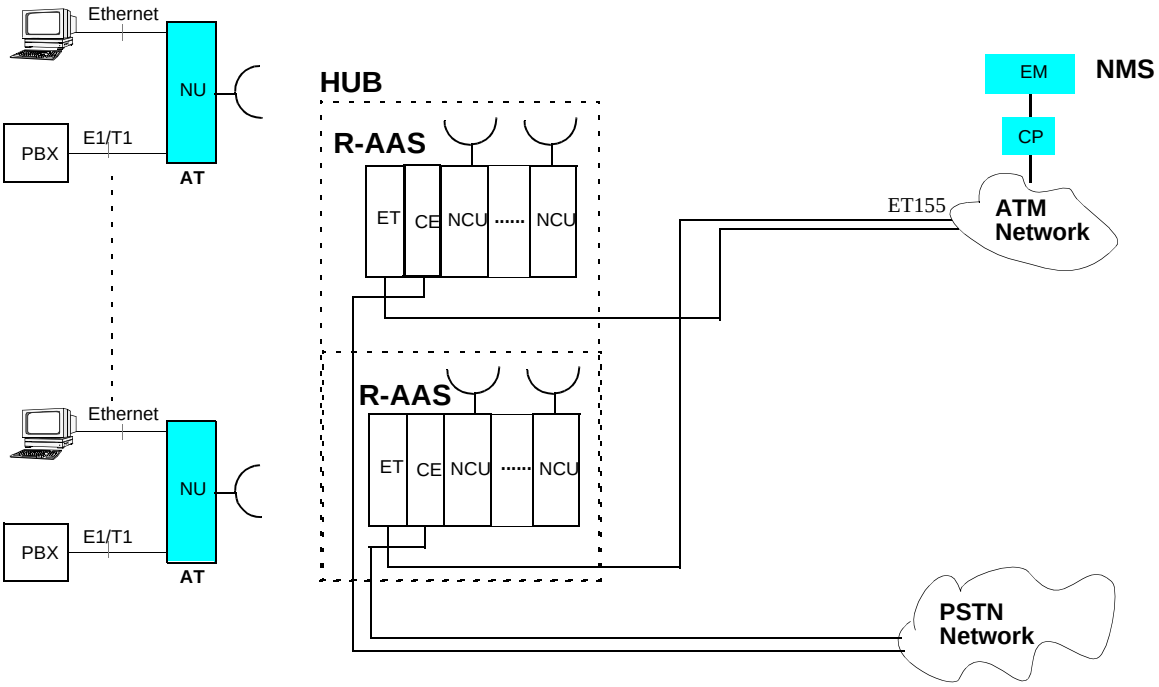

Figure 25. Equipment architecture example 4.

The R-AAS shelves can be connected to the CP directly via ATM backbone, as shown in Figure 25. on page 28 for example, without any C-AAS or CE-AAS presence in the equipment architecture.

2.2.7.5 Managed Information Base (MIB) List

The Common MIB contains a set of definitions common to all other MIBs and an Error Message Table that can give a better error explanation than the common SNMP errors.

Alarm and Event handling

The Event Table controls the treatment of events generated by the network element. Each entry in the event table describes an event or an alarm. By setting the desired treatment it is possible to control whether an event shall be logged, sent as a trap, or be discarded. The community string indicates to whom the traps shall be sent. The traps associated with the events are defined in the Trap MIB.

The Log table contains a historical log of all events and alarms that occurred in the system. Each entry in the table describes an event or alarm that occurred in the system. The log size is determined by the scalar variable and once the numbers of entries in the log exceeds this number, any new events or alarms that occur will overwrite the oldest entry in the log.

The Alarm Severity Assignment table allows assignment of the perceived severity of alarms in the system. Each entry in the table represents an alarm or event in the system (potential traps) and the severity level (indeterminate, critical, major, minor, warning or cleared) associated with that particular alarm or event. The operator may change the severity level of the entry.

The current alarm table contains all the currently outstanding alarms in the system. Each entry is a fault situation in the MINI-LINK BAS, which has not yet been repaired. Alarms will appear and disappear in this table as they occur/are repaired.

Equipment handling

The MINI-LINK BAS system node table contains a list of all System Nodes in the system. A system node is a logical entity in the system (a sub-network) in which PVC connections are made from a user interface (Customer interface) to a service interface (e.g. interface to the ATM switch/ATM backbone or an interface to a service node).

The subrack table contains entries for all the subracks in a specified system node. The slot table contains entries for all the slots for a specified subrack. The board table contains entries for the physical board inserted in a slot. System nodes, subracks and boards can be added at runtime.

Generic Services

The access user port table is used to represent NU internal ATM connection end points for datacom (ethernet).

The access service port table contains entries for a bidirectional ET155/DS3/E3/E1/T1 port in the C-AAS or R-AAS or CE-AAS. These ports represents endpoints for ATM connections.

Entries in the generic table describes NUs. Entries in the table are created by the operator as part of the procedure.

The Customer identity table contains a subset of the information in generic table indexed by the Customer ID, giving a fast way to obtain the system node, subrack, and position given an NU identifier.

Entries in the cross connect table represent PVC connections between a user port (Customer interface) and a service port (ATM switch interface or ATM service node interface). Entries in this table are created by the operator to set up a PVC.

Entries in the traffic descriptor table can be used as templates when setting up ATM PVC connections.

ATM Performance

The atmPerfTable allows access (via SNMP) to the ATM performance counters available on the ET interfaces (and their associated cellbus port counters). This table is used in the performance monitoring of the ET interfaces in MINI-LINK BAS. The table is created at start up by the system.

Interfaces

On the NU side different interface types are provided. See paragraph Chapter 2.2.3.3 on page 13 for detailed information.

The CP can be connected, via Ethernet Hub, to the public ATM network via an STM-1 interface or via a 10BaseT Ethernet interface.

The MINI-LINK BAS management system employs TCP/IP to communicate with the CP. The management interface in the CP is Ethernet 10BaseT.

Management application interfaces

They use the SNMP interface to manage the control system, or order development of a specialized interface built upon MINI-LINK BAS IMD interface platform. The already existing interfaces, such as E-ANMS service configuration (SC) and network surveillance (NS), may also be used.

External interfaces of the system

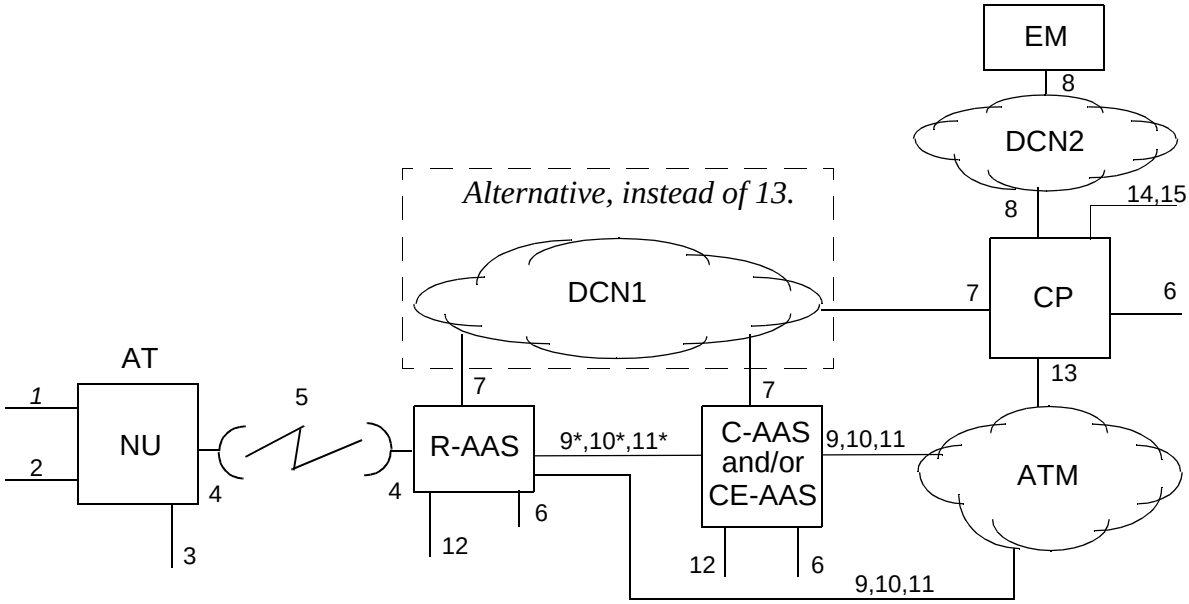

Figure 26. External interfaces to the system.

I/f	Reference	Note
1	10BaseT/100BaseT Ethernet IEEE 802.3, packetized, 10/100 Mbps, half duplex, electrical interface with bridging (RFC 1483) functionality, to minimize the system impact of supporting local LANs.	
2	2xT1/DS1 (structured/unstructured) ITU G.703/704, TDM, 1.544 Mbps, full duplex, electrical interface. 2xE1 (structured/unstructured) ITU G.703/704, TDM, 2 Mbps, full duplex, electrical interface	
3	AC 110/240V	
4	Intermediate Frequency interface	
5	Radio interface, 37.5 Mbps gross bit rate, full duplex using C-QPSK modulation scheme	
6	POU -48 V according to ETS 300 132-2	
7	Ethernet, IEEE 802.3/ISO8802-3	Private LAN, ICS/IP
8	Ethernet, TCP/IP	
9	ET155 optical, ITU-T G.957 S1-1, OC-3 IR-1, STS-3c/STM-1, G.707, I.432.1, TR-NWT-TR1112, GR-253-core ATM NNI or UNI header	ILMI not supported *) No UNI signalling
10	ET155 electrical, af-phy-0015, STS-3c/STM-1, G.707, I.432.1, TR-NWT-TR1112, GR-253-core ATM NNI or UNI header	ILMI not supported *) No UNI signalling
11	ET34/45, PDH, 34/45 Mbps, full duplex, electrical interface	
12	4xT1/DS1 (structured/unstructured) ITU G.703/704, TDM, 1.544 Mbps, full duplex, electrical interface. 4xE1 (structured/unstructured) ITU G.703/704, TDM, 2 Mbps, full duplex, electrical interface	
13	ET155 optical, Multi Mode fibre, STS-3c/STM-1	
14	SNMP v.1	
15	E-ANMS SC/NS	

3

MINI-LINK BAS ATM Transport and Multiplexing

3.1 Introduction

ATM is the end-to-end transport technique in MINI-LINK BAS.

ATM transport guarantees the efficient delivery of services with totally different needs, such as data traffic and telephony through a combination of virtual connections and possibility of differentiating classes of service.

The system exploits the statistical multiplexing capability of ATM implementing a fast dynamic capacity allocation. Intelligent buffering and overflow handling mechanisms are also implemented.

ATM transport along the system involves following functionality:

- Virtual Connections provisioning;
- Class of Service management;
- Buffering;
- Multiplex /cross-connection;
- Early Packet Discard;
- Fault Management;
- Performance Monitoring.

3.2 Virtual Connections

ATM cell transport is accomplished by setting up virtual connections along the system. The current release only supports permanent virtual connection in a point to point topology.

Connections encompass all the system and involve several Termination Points, Multiplexing Points and cross-connect Points. Figure 27. on page 3 depicts the system in terms of Termination, Multiplexing, cross-connecting points and user/service ports.

Service ports are ports toward a Core Network and can be located either on a C-AAS or a R-AAS. User ports are ports toward the Customer Premises Network and are located on ATs.

Termination and Multiplexing points are present in the ATs terminals and in the CE shelves. cross-connect Points are present in the Radio shelves R-AAS and in the Concentration shelves C-AAS.

cross-connecting functionality in the R-AAS and C-AAS allows the set up of connections among all ATs without involvement of the Core Network.

ATM connections are managed by the ‘connection handler’ in the Control Processor CP according to the system configuration.

The CP sets up connections along the system from the ATs terminals to the Radio, Concentration, Circuit Emulation shelves via the different device processors (DP) and board controllers involved.

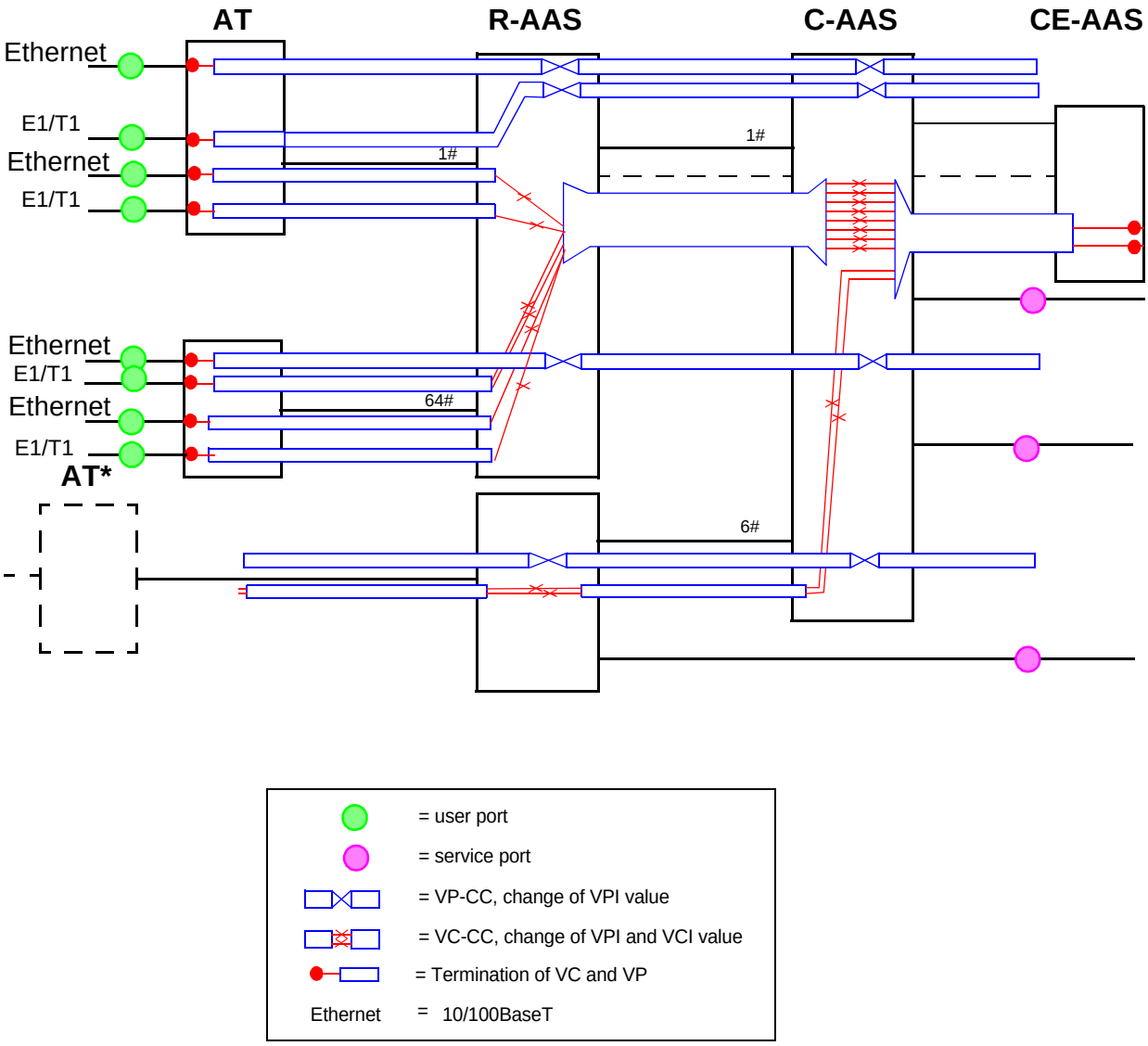

Figure 27. ATM point-to-point connections.

When setting up a PVC the operator shall specify, among other parameters, the user port, the service port, service class and VPI/VCI.

When setting up a connection the operator does not need to specify internal connections between the R-AAS and the C-AAS within the same system node as internal connections are directly handled by the connection handler in the CP.

3.2.1 VP/VC Connection Plan

Beside the normal usage for traffic transport, VP/VC connections are used as communication channels among different parts of the system for OA&M and control purposes.

The following general information is provided about ATM connections usage in the system.

The number of VP/VC connections depends on the system configurations in terms of served ATs, number of Radio Nodes, Concentration shelves and Circuit Emulation shelves.

Maximum number of VP/VC connections for traffic purpose is reported below.

Radio Node to NU VP/VC Connections

256 VPIs are available per Radio Node. 64 VPIs are available as Master VPIs (one for each AT), 192 VPIs are left for future ATM services.

The master VPI of each NU includes:

- 9 VCIs for non-ATM Native services (8 E1/T1 ports plus 1 for built- in Ethernet).

C-AAS to R-AAS VP/VC Connections

- $64*N_{RN}$ VPIs per R-AAS are reserved for service where N_{RN} is the maximum number of Radio Nodes per Radio Shelf (N_{RN}=6).

C-AAS to CE-AAS VP/VC Connections

- 1 VPI per CE-AAS, including 60 VCIs, is reserved for nx64 connections as the CE-AAS can host up to 15 CE-boards and each board provides 4 E1/T1 ports.

C-AAS to Service Network Interface VP/VC Connections

- 7 VPIs with 512 VCIs are reserved for Service Network Interface. The number of VPIs can be increased depending on the supported services and traffic. CUBIT-Pro can be set up to support 63 VPIs each with 512 VCIs.

The maximum number of VP/VC connections for control channels are reported below.

Radio Node to NU VP/VC Connections

The master VPI of each NU includes:

- 1 VCI for the Internal Communication System channel ICS
- 1 VCI for Radio Communication channel RCC.

C-AAS to CE-AAS VP/VC Connections

- 1 VPI per CE-AAS (for the Control System), including 17 VCIs, is reserved for DP communications.

C-AAS to R-AAS VP/VC Connections

- 1 VPI per R-AAS (for the Control System), including 393 VCIs, is reserved for DP communications:

393 VCIs = $N_{RN} + N_{RN}*N_{AT} + N_{ET} + N^{*}_{CEboard}$

where N_{RN}=6 Radio Nodes per R-AAS, N_{AT}=64 ATs per Radio Node, N_{ET}=2 ETs per R-AAS and $N^{*}_{CEboard}$=1 CE-board inserted in slot3 in the R-AAS.

CP to C-AAS VP/VC Connections

- 1 VPI per C-AAS is reserved for the Control System, including 17 VCIs for DP communications.

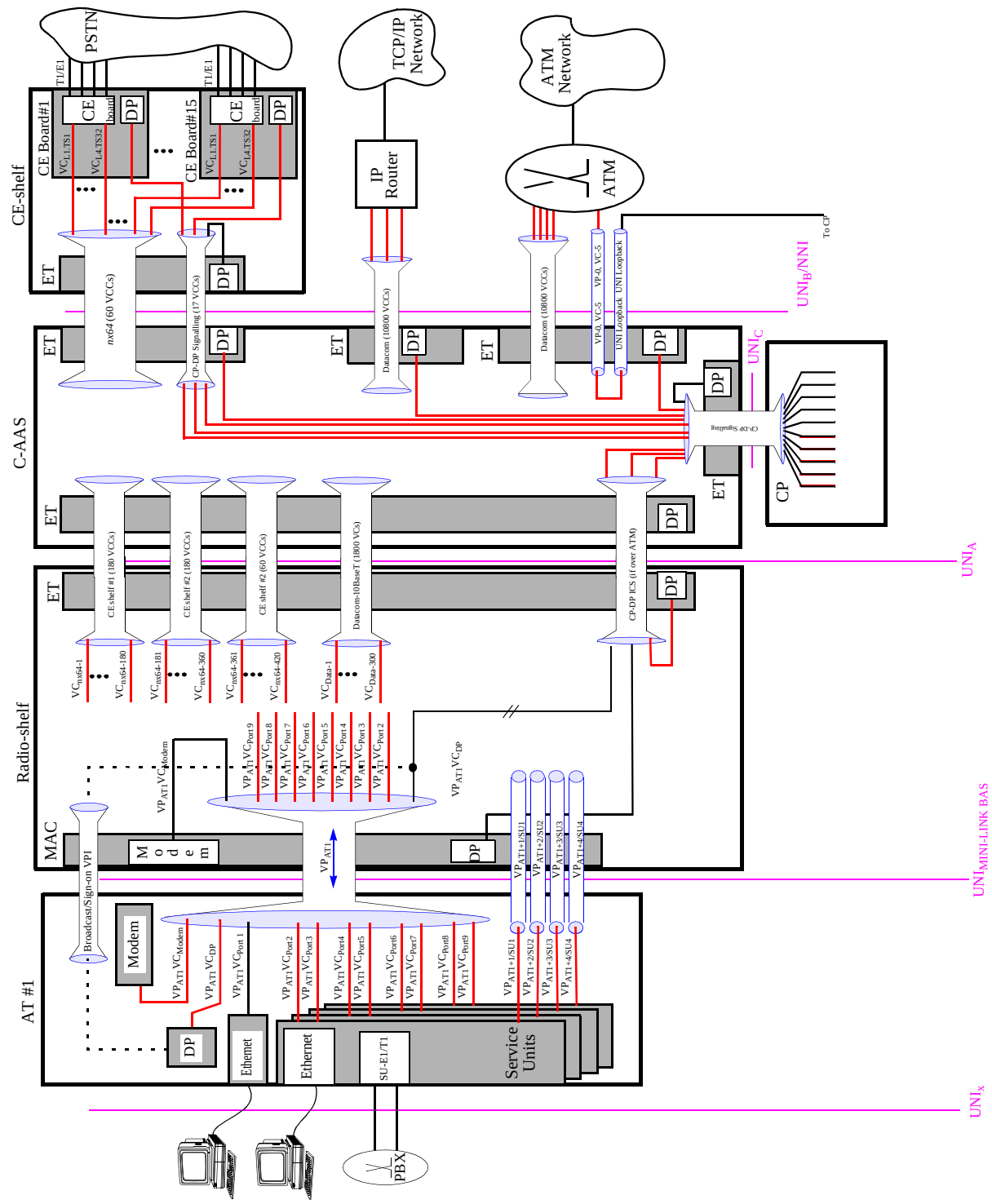

Figure 28. ATM layer routing AT and ANT.

3.3 Class of Service

Two Classes of Services featuring different QoS are supported:

- Constant Bit Rate CBR, that refers to constant bit rate services such as Circuit Emulation for telephony service or leased lines. QoS of CBR class requires a very low cell delay and cell loss ratio.
- Unspecified Bit Rate UBR for services that feature a bursty behaviour e.g. datacom services. For UBR services there are no guarantees on cell delay, cell loss ratio (they are referred as “Best Effort” services). MINI-LINK BAS exploits statistical multiplexing to transport UBR services in a very effective way.

Quality of Service has to be managed all over the system both in the access to the Radio links capacity (MAC) and in other different points namely at the cellmux and at the NU multiplexing.

MAC QoS Handling

The MAC protocol assures a fair access per class of service to terminals exploiting a round-robin algorithm.

QoS is handled providing separate queues for CBR and UBR services. CBR services are handled with higher priority than UBR services. In this way UBR services can share the available capacity in a fair way whereas cell delay is minimized for CBR services.

Cellmux QoS Handling

Cellmuxes are present in Radio Shelves (R-AAS) and Concentration Shelves (C-AAS).

The cellmux handles QoS at the egress ports: data cells from the bus are placed in different queues to allow different handling according to QoS.

This is not needed at the ingress ports as the speed of the cellbus is much higher (530-875 Mb/s) than the speed of any incoming link so no cell loss is expected.

NU QoS Handling

NU acts as a multiplexer of traffic from different SUs. All ports have fair access per class of service.

Therefore an equal amount of UBR traffic per port will be transported over the radio link.

Separate queues are foreseen for CBR and UBR services.

3.3.1 Services Description

E1/T1 Service Description

MINI-LINK BAS supports telephony services at the AT side through synchronous and plesiochronous SU-E1/T1. This service is supported using Circuit Emulated AAL1 PVCs with CBR connections.

10/100BaseT Datacom Service Description

Permanent Virtual Channel (PVC) connections are used in MINI-LINK BAS for data services. These connections are set up through management operations and the service is supported using AAL5 PVCs with Unspecified Bit-Rate (UBR) class of service.

3.4 Buffer Dimensioning

Multiplexing functions in different points of the system (Cellmuxes, NU Multiplexing, MAC) together with the need of rate adaptation require data buffering. Figure 29. on page 8 depicts buffer placement along the system.

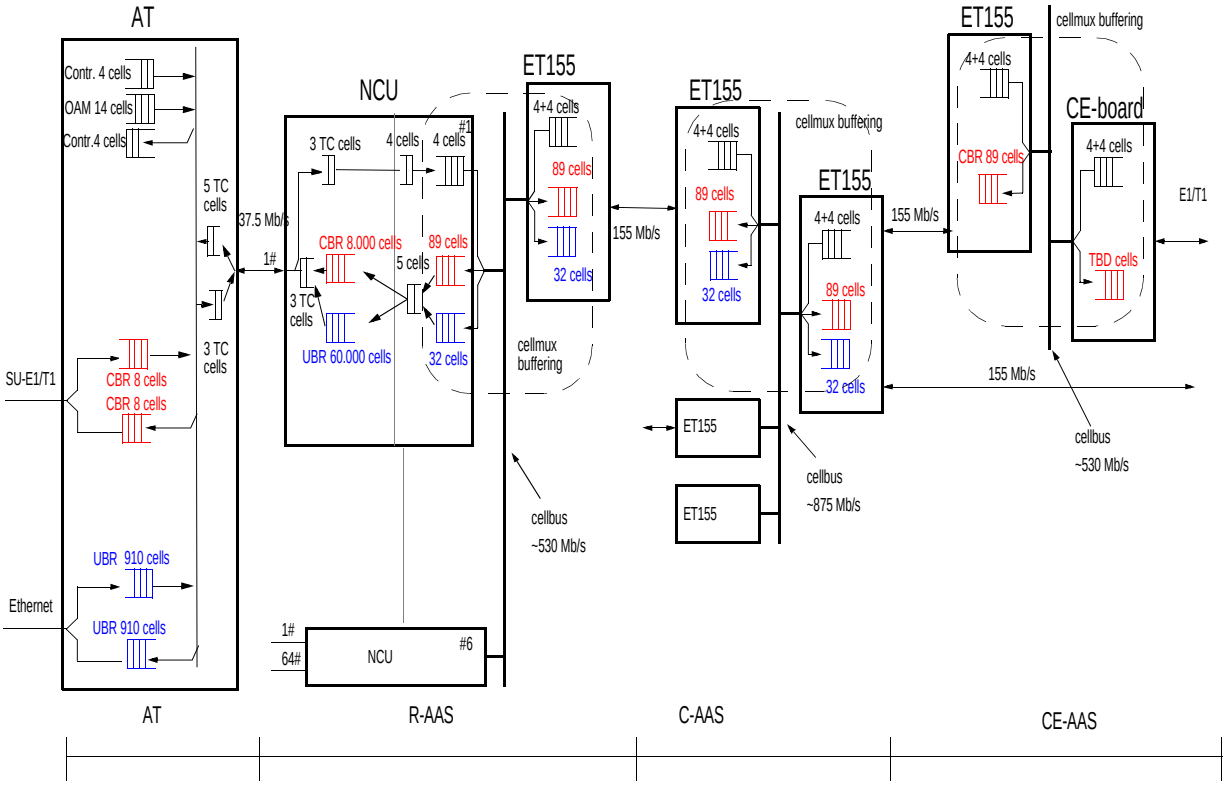

Figure 29. Default buffer allocation in the system.

Cellmux Buffering

The cellmux foresees egress buffering and a very limited ingress buffering as cells at ingress are quickly transferred by the very high speed cellbus, therefore no cell loss is expected.

The size of the queues at the egress side of the cellmux is 89 cells for CBR and 32 cells for UBR.

MAC Buffering

Extended buffers are provided at R-AAS in the downstream direction. The buffer size is SW configurable up to 8000 cells for CBR and 60000 cells for UBR.

NU Multiplex Buffering

In the NU buffering is provided both in upstream and downstream direction to/from the Ethernet port.

The buffer size for each QoS type is SW configurable:

- CBR buffer size =between 6 and 63 cells;
- UBR buffer size = up to 8191 cells.

3.5 Congestion Control

In order to avoid congestion, Early Packet Discard functionality is provided on ET155, ETDS3/E3 in the system. EPD functionality is provided for UBR Class of Service.

Early Packet Discard foresees cell discarding in case the buffer filling exceeds a programmable threshold (default value 70%). All cells belonging to the same AAL5 frame are discarded in order to avoid the transport of incomplete AAL5 frames that would result in an inefficient usage of system capacity.

In this way the throughput of correct AAL5 frames is greatly improved at overload.

The frame end is transmitted anyway in order to prevent the next coming frame from being discarded.

3.6 Cellmux

Cellmux functionality is provided in Radio, Concentration and Circuit Emulation shelves.

The purpose of the cellmux is to perform multiplexing/demultiplexing of ATM cells. However in the Radio and Concentration shelves the cellmux could also be used as a cross-connect, allowing transport of ATM cells among Terminals of the same Radio Node or the same Hub without resorting to the Core Network.

The cellmux consists of a cellbus and ports. The cellbus (32 bit wide) is present in the backplanes of the Radio, Concentration and Circuit Emulation shelves. The cellmux ports (i.e CUBIT-Pro) are placed on the Node Control Units, ET boards and CE boards.

Figure 30. on page 10 depicts the Cellmux in the Radio shelf. Cellmux ports in such a case are on Network Control Unit and ET boards. Cellmux ports in the Concentration shelf are on ET boards only, whereas in the CE shelf they are on CE and ET boards.

Since multiple Cellmux ports share the same bus, access contention must be resolved. Access contention is resolved by a central arbitration function. Cellmux ports will request bus access, and the bus arbiter will assign access ‘grants’.

The bus arbiter functionality is included in all the Cellmux ports but only Cellmux port of the ET card in slot 1 will actually act as bus arbiter.

Communication is possible among any of the devices on the bus. Each cell placed onto the cellbus can be routed either to one single target (point-to-point connections), or to multiple targets (point to multipoint connections), exploiting unicast, multi/broadcast addressing capability respectively.

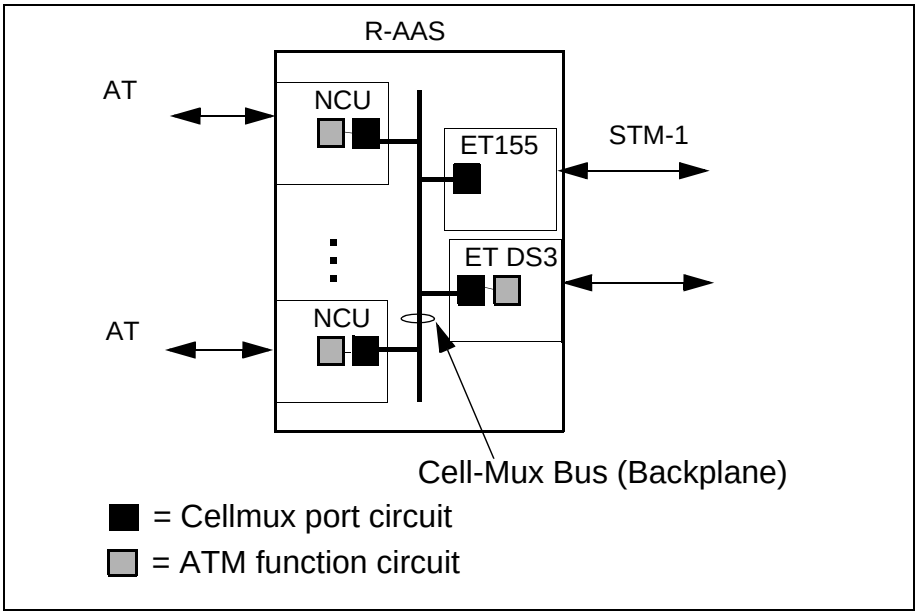

Figure 30. CellMux, when used in R-AAS.

CellMux ports perform OA&M and control functionality too. In the R-AAS and in the CE-AAS, the OA&M and control functionality is mostly centralized in the Cellmux port of the master ET board, whereas in the C-AAS, the OA&M and control functionality are distributed among all ET boards.

Address Translation

The cellbus port contains a set of translation records for mapping VPI or VPI/VCI of incoming cells to new VPI or VPI/VCI for outgoing cells. As a VP-cross-connect each cellbus port can translate the full VPI-range, 4096 VPIs in NNI-mode and 256 VPIs in UNI-mode.

As a VP/VC cross-connect the address translation capability of each cellbus port depends on the equipped translation RAM. About 31.000 connections can be managed with a TRAM size of 256Kbytes.

Other Cellmux Features

The cellmux implements some low level functionality exploiting the cell format on the cellbus.

The cellmux ports on the ingress side add extra bytes to the ATM cell, so that the cell format on the bus is 64 bytes long. Extra bytes are used mainly for routing purposes.

Indeed the cellbus headers indicate the destination port and destination physical line. Furthermore they specify which queue (CBR, UBR, etc.) is addressed. At last a multicast indicator is also foreseen.

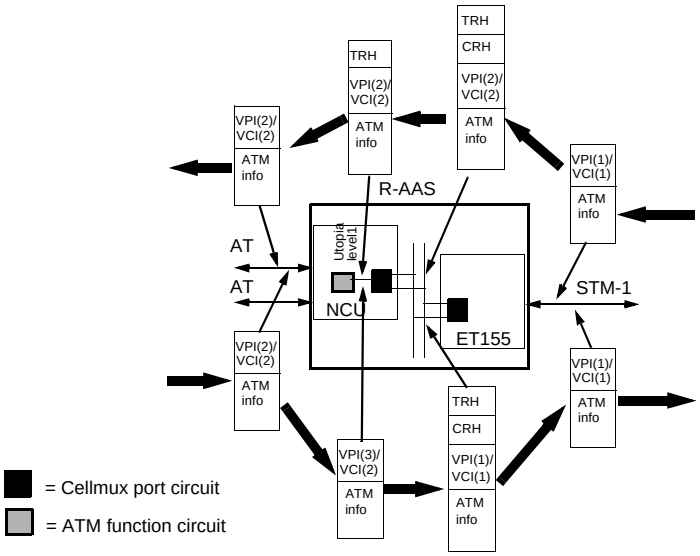

Figure 31. ATM point-to-point cell transport through the CellMux.

3.7 NU Multiplexer

The NU acts mainly as a VP/VC multiplexer collecting ATM cell streams from SUs. Figure 32. on page 12 depicts the functional structure of the NU. The multiplexing function is accomplished by the ATM Mux in the NU.

Beside the ATM traffic multiplexing the ATM Mux block also performs the multiplexing of OA&M and control cells. Multiplexing/Demultiplexing is accomplished through the usage of an UTOPIA Level 2 and a PCI interface.

Multiplexing from PCI interface is actually done by the Device Processor DP that also performs segmentation and reassembling of IP packets in ATM cells. The DP is connected to the ATM Multiplexer through an internal Utopia interface.

The DP performs QoS handling both at IP level and ATM level (see also Figure 33. on page 13 and Figure 34. on page 14).

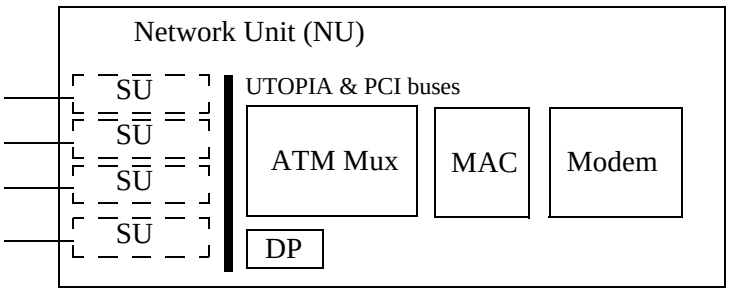

Figure 32. NU block diagram.

3.7.1 Upstream Cell Flow

In the Figure 33. on page 13 a detailed functional scheme of multiplexing in the upstream direction is reported. Cell buffering is performed per Class of Service both at ingress side and egress side.

Buffering at ingress side is foreseen on the service units SUs for non ATM services and on the DP for IP services from ethernet SUs.

The generic SU is depicted in the same figure with four queues, but actually the number of queues implemented depends on type of service supported. A SU -T1/E1 board only implements CBR queues (one for each physical port).

The ATM Mux implements a fair scheduling algorithm within each traffic class for polling of the queues on the SUs and the DP.

An Idle Cell Generation function is foreseen, in case no ATM cell is available when required by the received permit. The ATM Mux generates new HEC values on outgoing cells.

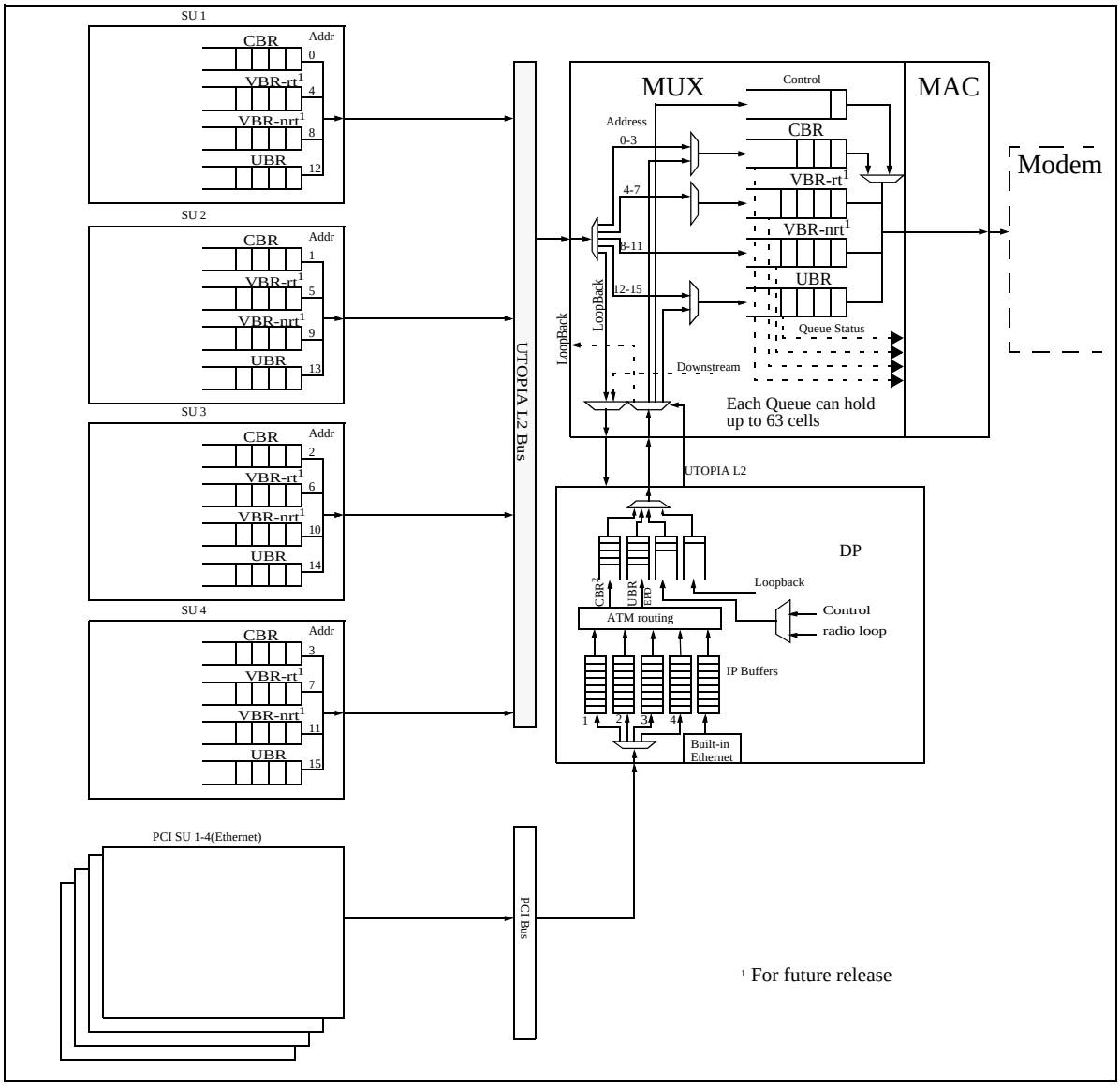

Figure 33. Upstream ATM Cell buffering.

The egress queues of the ATM Mux are 63 cells wide per traffic class (UBR and CBR in the current release of MINI-LINK BAS). This queue size is consistent with the maximum size of requests handled by the MAC protocol. Higher buffering needs are fulfilled by the ingress buffering on the Service Units and the DP.

The Control and CBR queues are handled by the MAC protocol as one queue that is the CBR request values, sent to Radio Node by the terminal in answer to a polling cycle, represent the sum of the cells in the CBR queue and the cells in the Control queue.

Nevertheless control cells will always have higher priority than CBR cells for upstream transmission, the priority being managed locally in the AT. The queue in the ATM Mux is selected on the basis of the UTOPIA address where the cell is received.

3.7.2 Downstream Cell Flow

Demultiplexing scheme in downstream direction is just the reverse of the multiplexing in upstream direction. Small differences are in buffering principle and size. The cell buffering in downstream direction is foreseen only at the egress side both on SUs and DP.

Each SU can implement one or more queues depending on type of service supported. A SU T1/E1 board only implements CBR queues (one for each physical port).

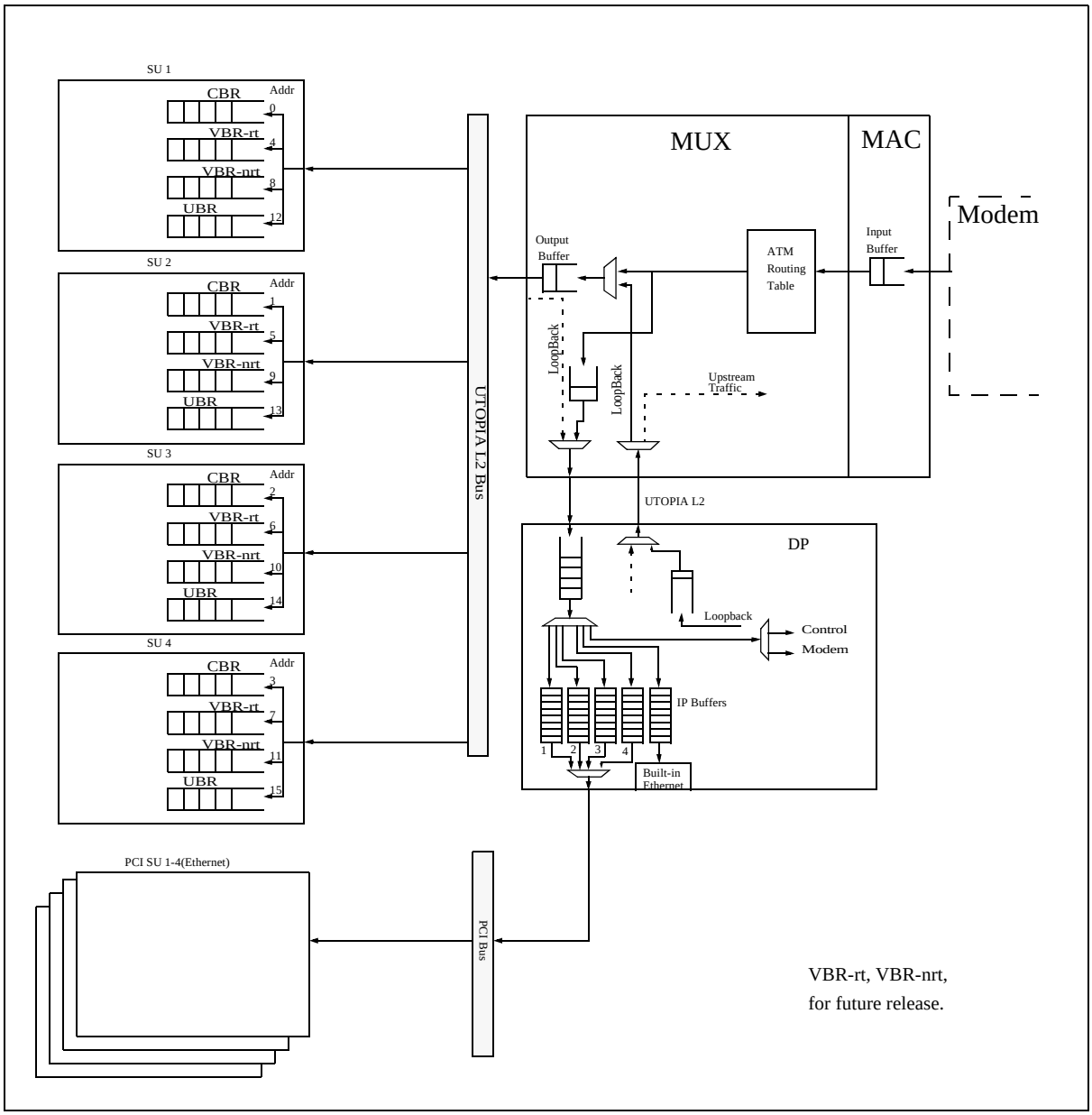

Figure 34. Downstream Cell buffering

3.7.3 ATM Addressing Scheme

The ATM Mux handles the routing of cells to/from the appropriate interface (SU or Device Processor). This routing can be performed either on VPI or VPI /VCI.

UNI mode is used with 8 bits assigned to VPI field that can assume values from 1 to 255 (VPI = 0 is not used) and 16 bits available to VCI field with possible range value between 0 and 65535. The special VC connection where VPI = 255 and VCI = 65535 is reserved for Sign On procedure.

Usage/Allocation of VPI/VCI

In the current release of the product one VPI is assigned to each NU. Even if only one VPI is used, the NU is able to handle up to 32 simultaneous VPIs in the range of 1 to 255. The number of VCs that can be handled on any of the 32 VPs is 256, with a VCI range from 0 to 255.

VCI values between 0 and 15 are not used for user traffic to which 240 VC per VP are available. Each of the assigned VCs can be routed to any SU or the DP.

During Sign-On procedure a VPI is assigned to the NU. Such a VPI is referred as ‘master VPI’. This VP has VC routing by default, and one VCI will be assigned to the NU at this time.

Ethernet E1/T1 Service Unit

In case of non-ATM-native user service, e.g. Ethernet or SU-E1/T1, the NU maps all user data arriving at the user port onto ATM cells with the VPI value set to the master-VPI.

In downstream direction the MAC layer on an NU drops all ATM cells which do not have the VPI values assigned to that NU. The ATM cells which have the assigned VPI value will pass the MAC layer and the NU will map the data from the ATM cells towards the user-ports.

All VPI translation which has to be performed within the NU is thus static; meaning that the content of the translation table needs not to be changed at run time, except the VPI value assigned during Sign On.

By mapping all traffic on one VPI value (master VPI), the number of connections for traffic, which can be setup towards one NU is limited to 240.

3.8 Operations & Administration

3.8.1 Connection Handling

Connection handling refers to following operations:

- Create/Delete VP and VC cross-connect;
- Activate/Deactivate VP and VC cross-connect;
- Create/Delete traffic descriptor.

Connection handling can be performed either from the MINI-LINK BAS EM.

3.8.1.1 Create/Delete VP and VC Cross-Connect

Create/delete VP and VC cross-connect provides functionality to create/delete a VP/VC PVC connection. Note that the ATM termination points are created simultaneously as the VP/VC cross-connect is created.

Creation of a VP/VC cross-connect is only successful if sufficient resources are present in the managed element to support the service (equipment, bandwidth and so on, however, the HW does not need to be in operational status = enabled).

It is the responsibility of the managed element to decide if creation is possible or not. A VP/VC cross-connect can only be deleted if it is in a deactivated state.

The following information is available when creating a PVC:

User side:

- Downstream and upstream maximum bandwidth;
- VPI/VCI available ranges;
- Operational status (enabled/disabled);
- Port type (Ethernet, SU- E1/T1).

Service side:

- Downstream and upstream maximum and available bandwidth
- VPI/VCI available ranges
- Operational status (enabled/disabled)
- Port type (ATM)

For each PVC the following parameters are set:

- VPI/VCI;
- Downstream and upstream traffic descriptor;
- Activation of the PVC.

If traffic descriptors (see below) are not used, the following parameters should be set individually:

- Downstream and upstream service class (UBR, CBR);
- Downstream and upstream source type (Normal);
- Downstream and upstream bandwidth (cells/second).

In order to manage all PVCs a listing of all PVCs in the system can be done with the possibility to narrow the scope of the list by the following criteria:

User side:

- Customer identity;
- Sub-network;
- AT;
- Port.

Service side:

- Sub-network;
- Subrack;
- Position;
- Port.

3.8.1.2 Activate/Deactivate VP and VC Cross-Connect

Activate/deactivate a VP/VC cross-connect provides functionality to change the administrative status of a cross-connect (unlocked/locked).

3.8.1.3 Create/Delete Traffic Descriptor

Create/delete traffic descriptor provides functionality to create/delete a traffic descriptor. A traffic descriptor is a template in order to streamline the set up of similar PVCs.

The attributes of a PVC can be defined in a traffic descriptor, which is then used in the actual set up of the PVC. Note, once a traffic descriptor has been created its attributes may not be modified.

The following parameters define the traffic descriptor:

- Traffic descriptor name;

- Service class (UBR, CBR);
- Source type (Normal);
- Bandwidth (cells/second).

3.8.1.4 PVCs Set-up Admission Control

For an ATM cross-connect of CBR type, bandwidth is subtracted from the available bandwidth for all involved physical units at set-up, and added at removal. If no bandwidth is available at one or several units, the cross-connect is rejected.

For an ATM cross-connect of UBR type, peak cell rate is controlled over the Radio link (that the link speed exceeds or equals the bandwidth). No bandwidth is subtracted/booked.

3.8.2 VPI/VCI Configuration

The number of possible connections is less than the addressing capability of UNI/NNI mode as they are limited by the address translation capability of the Cellmux. On the service ports side it is possible to set the number of VPC, the number of VCC, the range of VCIs and VPIs values in a flexible way in order to suit the application.

Different configuration are foreseen as depicted in the table below.

	VPI range	VCI range	Max number of VCCs	Max number of VPCs
UNI mode	0 - 255	0 - 127	31360 (in 254 VPIs)	255 - N
		0 - 255	31232 (in 127 VPIs)	
	except the VPI used for ICS	0 - 511	31232 (in 63 VPIs)	where “N” is the number of VPI values allocated to VCCs
		0 - 1023	30720 (in 30 VPIs)	
		0 - 2047	30720 (in 15 VPIs)	
NNI mode	0 - 4095	0 - 127	28544 (in 232 VPIs)	4095 - N
		0 - 255	28416 (in 116 VPIs)	
	except the VPI used for ICS	0 - 511	28160 (in 58 VPIs)	where “N” is the number of VPI values allocated to VCCs
		0 - 1023	27648 (in 27 VPIs)	
		0 - 2047	26624 (in 13 VPIs)	

Maximum Number of cross-connects

The number of VPCs, VCCs depends upon the chosen configuration, based on UNI or NNI mode, and the number of VPIs simultaneously used for VCC.

As it can be seen from the table above, the maximum number of cross-connects per unit is dependent upon the usage of VPIs for VCC cross-connects. The more VPIs used for VCC, the less VPIs available for VPCs. The number of VPCs per configuration is given by the column “Max. number of VPCs”, as a function of the number of VPIs used for VCCs (N).

Also, the number of cross-connects depends on the possibility to map address translation memory into suitable blocks for quick translation.

3.8.3 Early Packet Discard Threshold

The early packet discard threshold is settable from configuration files in the Control Processor. This is valid for ET boards with extended buffers such as ET155 extended buffer and ET E3/DS3. The default threshold value for Early Packet Discard is 70%.

3.8.4 Buffer Sizes

The CBR buffer size on the RN and on the AT is critical because of two contradictory aspects: first, the bandwidth is greatly reduced compared to the incoming port bandwidth, so a large buffer to handle any kind of burst may be required for cell loss sensitive applications.

On the other hand, a small buffer is better for cell delay variation sensitive applications. Therefore the size of this buffer can be set by the control processor to a value between 6 and 63 cells. Buffer size to choose depends upon:

- How well shaped is the CBR stream. If it is badly shaped i.e. almost VBR, a large buffer of up to 60 cells is necessary
- How often is a short CBR overload expected. If never, the queue can be very short
- Trade off between low delay variation and low cell loss. If the application requires a low CDV but cell loss not equally critical then a very short queue is recommended.

3.9 ATM Layer Maintenance

3.9.1 Performance Monitoring

Performance parameters are not available per connection, but per ET ATM over SDH/Sonet interface and associated cellbus port interface.

The counters available are:

- UBR and CBR cells discarded due to egress queue congestion;
- total number of cells received on the cellbus port;
- number of correctable HEC errors on the ET;
- number of cells discarded due to multiple HEC errors;
- receive cell counter on the ET;
- transmit cell counter on the ET.

3.9.2 Fault Management (I.610)

MINI-LINK BAS performs ATM fault management functions for handling of F4/F5 flows (VP/VC-AIS and VP/VC-RDI) according to ITU-T I.610.

Besides it is possible to activate transparent F4/F5 flows through OAM cells. For further details see the specific section in the O&M manual.

3.9.2.1 R-AAS, C-AAS, CE-AAS Fault Management

The cellmux is responsible for the ATM Fault Management functions in the Radio, Concentration, Circuit Emulation Shelves.

After a detection of a line failure from the application board (e.g. ETs), the cellbus port control software is responsible to generate:

- VP-AIS onwards for all the non-terminated VP connections;
- VC-AIS onwards for all the terminated VP connections;
- VP-RDI backwards for the terminated VP connections.

After a reception of a VP-AIS, it starts to generate, for terminated VP connections:

- VC-AIS onwards for all the VC connections using that particular VPI;
- VP-RDI backwards for the faulty VP connection.

whereas the VP-AIS passes transparently in case of VP connections not terminated. The Cellmux is also responsible to extract the VP-RDI for terminated VP connection.

The Figure 35. on page 21, Figure 36. on page 22 and Figure 37. on page 22 depict the VP/VC-AIS VP/VC-RDI in case of physical faults in different points of the system.

For example, if at the Service Network Interface/Internal Network Interface a Loss of signal is detected (Figure 35. on page 21):

- on SDH level, RDI is sent upstream on line (multiplexer section) & path;
- on ATM level, VP-RDI is sent upstream for terminated VPIs;
- for terminated VPIs, VC-AIS is sent downstream;
- for non-terminated VPIs, VP-AIS is sent downstream.

If at the SNI a RDI is detected, a RDI is sent to ET. If at MINI-LINK BAS physical link layer a fault is detected:

- for all terminated VPIs VCCs, VC-AIS is sent upstream and VP-RDI is sent downstream;
- for all VPC, VP-AIS is sent upstream.

The number of OAM cells sent and received is limited per ET board. Especially on the ET in the R-AAS where the DP has a rather high load due to the centralized architecture, OAM cell generation will have low priority.

The difference between Distributed and Centralized architecture as concerning the support the Fault Management procedures is that the former operates on events detected on the incoming line of the board it is running on; the latter operates on events related to all the other boards of the shelf.

This implies that in the R-AAS it is the ET board that is responsible for sending all OAM cells while in the C-AAS each ET board is responsible for sending OAM cells that originate from its own ET link.

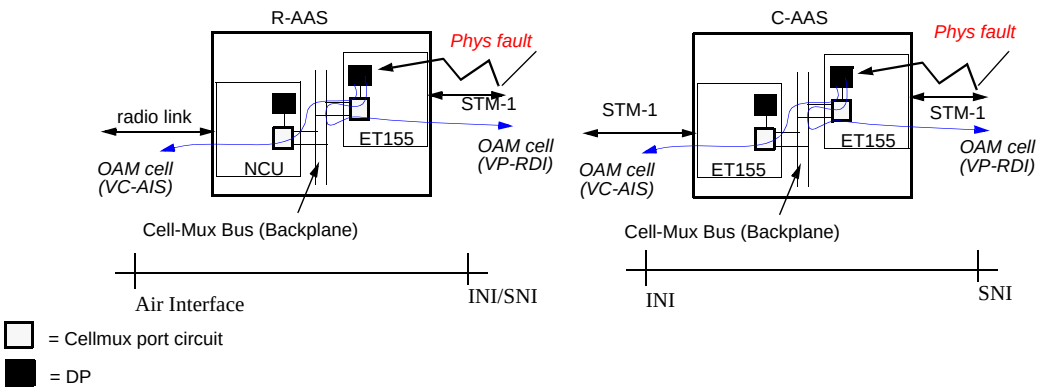

Figure 35. OAM cell generation in the R-AAS and C-AAS in downlink.

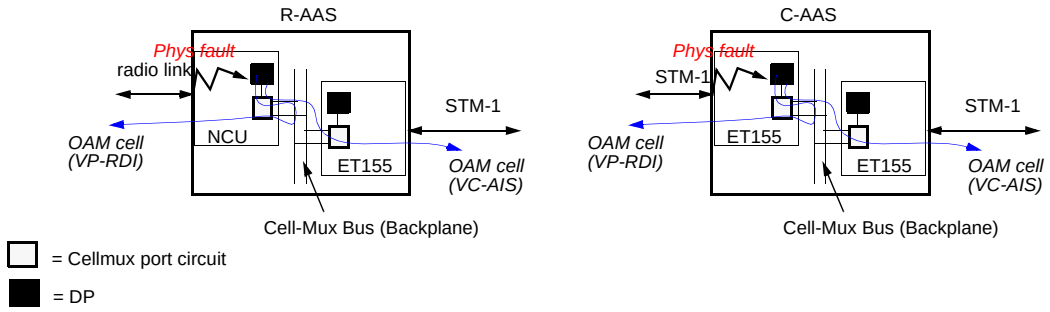

Figure 36. OAM cell generation in the R-AAS and C-AAS in uplink.

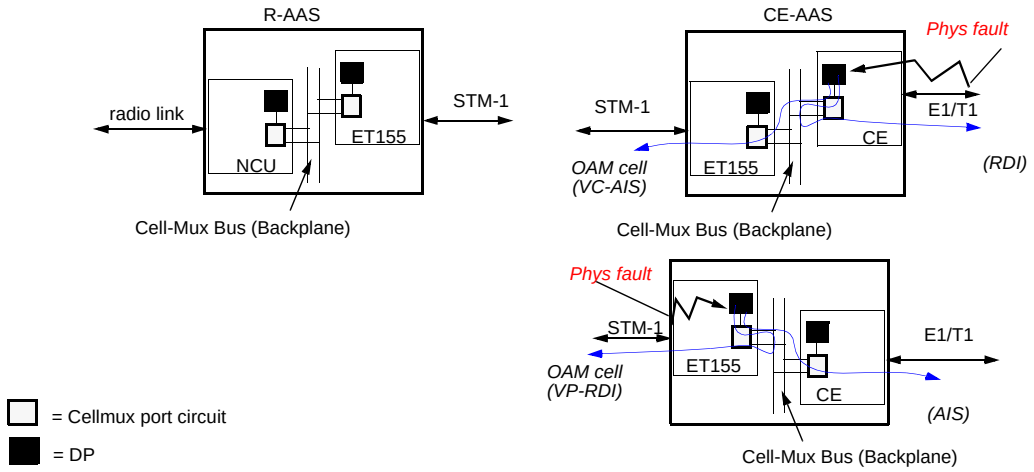

Figure 37. OAM cell generation in the CE-AAS.

3.9.3 Additional OAM Functionality

Internal buffers (CBR) are supervised and alarms are generated in case of overflow. If a cellbus port has not received a grant within a configured time an alarm is also given. The cell transmission over the cellbus is parity protected.

An internally controlled loop-back function is provided for diagnostic purposes. It is continuously checking in the C-AAS and CE-AAS, whereas in the R-AAS it is only checking at start-up/board insertion/restart.

3.10 Features

3.10.1 Transmission Delay

The total cell transfer delay is depending on traffic mixture, traffic load and which configuration is used.

Cell Transfer Delay is slightly different in the uplink and in the downlink mainly due to the different buffering and to the asymmetrical behaviour of the MAC Protocol.

Anyway the overall Cell Transfer Delay depends on several contributions, namely:

- Cell Segmentation & Reassembling;
- AT buffering;
- MAC protocol;
- Time of Flight;
- Cellmux buffering and operation;
- Cell Delay Variation Equalization (only CE services).

Some of these parameters depend on the operator settings, for instance buffer size. An evaluation of transmission delay is available. Some indications are given in the table below for the Cellmux in the different subracks.

The evaluation is very conservative as long Max. CTD is concerned. If the system is correctly configured in terms of traffic dimensioning, the experienced Max. CTD will be much lower than the value given in the Theoretical Max. CTD column, for all practical situations.

Even the theoretical Min. CTD is very unlikely.Therefore the evaluation of the cell delay variation CDV, as difference between the minimum and maximum CTD based on the theoretical values given in the table, is very conservative.

ATM Delay at Cellmux

Delaying unit	Theoretical Min. CTD C-AAS/R-AAS [us]	Theoretical Max. CTD C-AAS/R-AAS [us]
Ingress ET155	1.6	58/90
Ingress ET DS3/E3	2.7	58/90
Ingress CE-board E1	>58	>58/90

Delaying unit	Theoretical Min. CTD C-AAS/R-AAS [us]	Theoretical Max CTD C-AAS/R-AAS [us]
Ingress CE-board T1	>73	>73/105
Cellbus backplane	1/1.6	8.2/12.8
Egress ET155	5	272 CBR 110 UBR
Egress ET155 extended queue	6.5	700 CBR 55000 UBR
Egress ET E3	18.5	3087 CBR, 240000 UBR

3.10.2 Throughput

Cellbus Throughput

R-AAS cellbus speed is currently ~530Mbps @ 20MHz 80% is recommended maximum load i.e. ~424Mbps. C-AAS cellbus speed is currently ~875Mbps, 80% is recommended maximum load i.e. ~700Mbps.

ET Board Throughput

The below calculations does not remove the in-band ATM signalling cells.

Board	Cells/second	Mbps
ET155	353207	149.759
ET E3	80000	33.920

Capacity Usage for ICS and RCC Channels

In MINI-LINK BAS the CP directly controls all RNs and all ATs. The CP has one ICS connection to each RN and each AT. The computation of throughput does not take into account capacity used by OA&M and Control channels namely ICS and RCC channels.

For the RN to AT communication bandwidth shall also to be taken into account that throughput during normal operation is somewhat more than during configuration. The worst condition occurs during restart when the AT has to be re-configured and provisioned with all Management Data.

4

MINI-LINK BAS Physical and MAC Layers

4.1 Introduction

In this chapter it will be presented a brief treatment of the implementation of the first three levels, which are the Physical, Logical Link Control and MAC Layers, in the MINI-LINK BAS system.

Physical Layer handles the conversion between a digital stream and RF signal, providing the following functions:

- Media Control Loops;
- C-QPSK Modulation both in Uplink and Downlink;
- Automatic Transmit Power Control (ATPC), to prevent the ATs to create unnecessary interference to other MINI-LINK BAS Cells.

In particular in this chapter it will be considered the Physical Air Interface, whereas the aspects regarding the Users, Service Network and Internal interfaces are described in the relative sections.

Logical Link Control Layer (LCC) creates the information frame structure to be transported by the link. The LLC provides the following functions:

- Downstream Frame Alignment Signal (FAS);
- Scrambling;
- Forward Error Correction;
- Error Control (by CRC);
- Performance Monitoring.

Finally the MAC Layer handles the access to the physical medium providing the following functions:

- TDMA Access;
- Handling Request and Permits to access the media;
- Signing-on of new ATs;
- Ranging of the new ATs to compensate for propagation delay;
- Addressing of ATs.

Following the OSI stack, which describes the general structure of a communication system, we can define the overall architecture of the MINI-LINK BAS system as depicted in the Figure 38. on page 3.

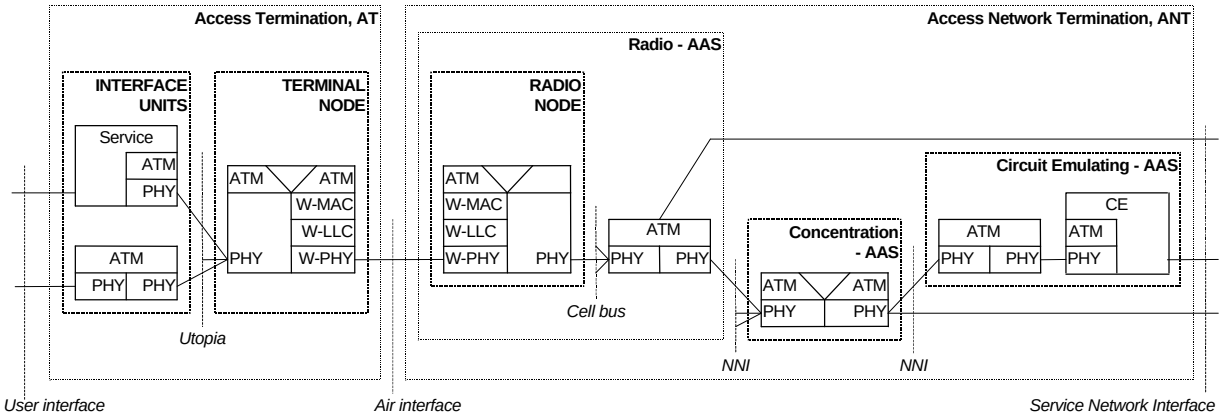

Figure 38. Generic MINI-LINK BAS system model.

4.2 Physical Layer

The service offered by the Physical Layer is to transfer bits or bit groups. The protocols of this level handle the interfaces between terminal systems and/or Modems, and their function is to manage the link through the physical media, in the most effective way in terms of channel allocation, channel bandwidth usage and transmission robustness.

Facilities are implemented in the Physical Layer in order to allow point to multipoint operations by controlling physical parameters like carrier amplitude and frequencies, modulation phase and modulation index.

The most important functionality handled by this level are implemented in two specific blocks: the Radio and Modem Units.

A functional scheme for the Radio and for the Modem Units are depicted in the Figure 39. on page 4 and Figure 40. on page 4.

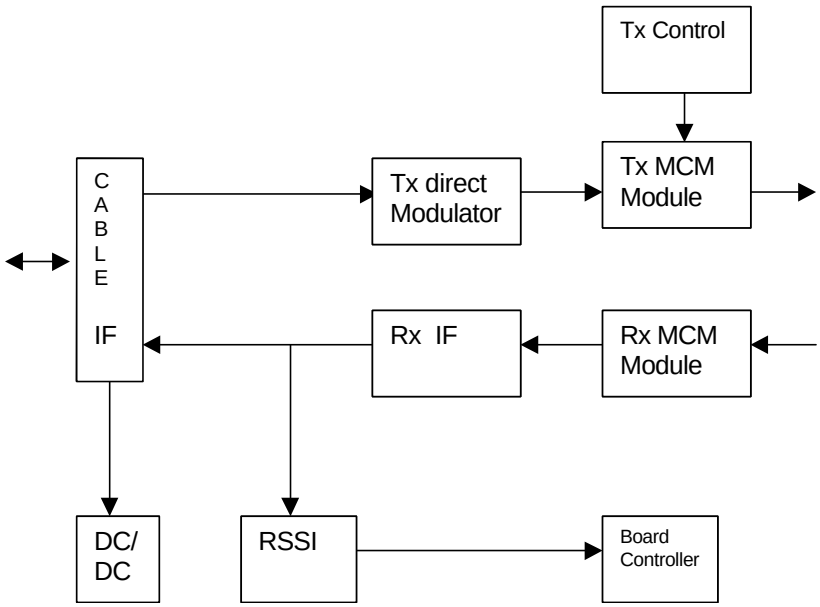

Figure 39. Radio Board function block diagram.

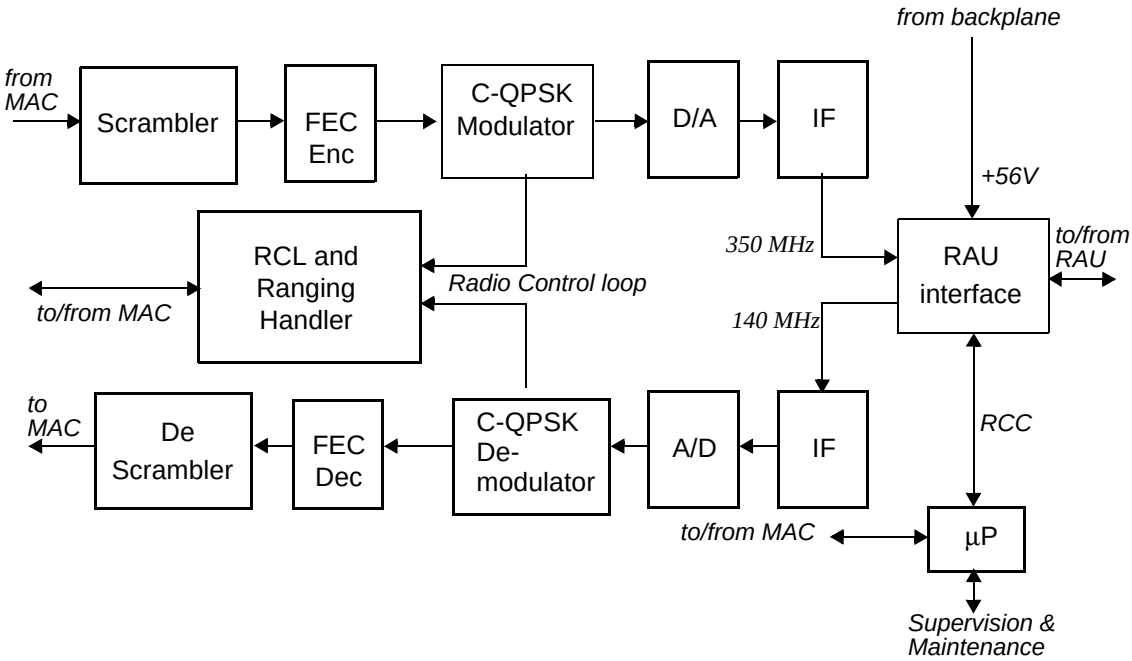

Figure 40. Modem functional block diagram.

4.2.1 Media Control Loops

Media Control Loops are needed to control transmission parameters of Terminals and Radio Node in order to make a proper working of Point to Multipoint transmission scheme.

Point to Multipoint synchronization encompasses Carrier amplitude and frequency control, modulation phase and modulation index control. These control loops are used to compensate the effects of the real components and of the radio propagation.

Actually each of the above controls foresees two loops. A local internal loop and a remote radio loop. The local loops are confined to the Node whereas radio loops encompass Node and Terminals.

The internal and radio loops share the same error detectors. The error corrections are performed internally into the demodulator for the internal control loops while are performed into the remote radio and modulator for the radio control loops.

The action of internal control loops is immediate (with the only exception of the amplitude control loop); they act directly on the received bit stream, whereas the radio control loops act at the remote transmission side and their time response depends on the loop bandwidth.

In order to implement the radio control loops a radio channel RCC is provided to send back through the air interface the error information to the terminals.

In the following there is a description of Amplitude and Frequency Control Loops.

Modulation Phase and Modulation Index control are strictly involved in the modulation and demodulation processes and will be described in the Modulation section.

4.2.1.1 Amplitude Control Loop

Amplitude control is necessary in uplink direction in order to have a constant signal at the input of the demodulator passing from a TDMA slot to the adjacent one. In fact in the uplink direction there are the contributions of the different terminals served by the Radio Node.

Therefore for proper operation the contribution of each terminal shall be equalized. This is accomplished by the Amplitude Control loops: at the Radio Node the amplitude is measured and an error signal is send back to the terminal in order to adjust output power until error is null.

The Radio Unit in the Node transmits at a fixed output power level whereas the Radio Units of terminals change dynamically their output power in such a way that the signal at the input of the Modem in the Node holds nominally equal amplitude from all the ATs.

In order to control carrier amplitude a facility is provided to measure the amplitude of the received signal referred to RSSI (Received Signal Strength Indication).

The information concerning the error relevant to the amplitude is evaluated in the Node Modem exploiting also the RSSI information coming from Radio.

The transmitted power is fine-tunable in the Terminal Radio only. The Radio Node sends (via Radio Control Channel interface) the peak value of the received signal to the Modem, where this value is compared with a reference amplitude. The result of the comparison is a byte which represents the amplitude error (-128/+127).

4.2.1.2 Frequency Control Loop

The carrier frequency of all terminals in uplink direction must be controlled too, in order to allow the Modem in the node to work properly passing from a TDMA slot to the adjacent one.

Synchronization of carrier frequency of terminals is accomplished using the Node carrier frequency as a reference. All terminals will lock to the carrier frequency of the Node.

The Carrier in the Node is generated from an internal reference supplied by a Voltage Controlled Temperature Compensated Crystal Oscillator (TCVXCO) at 13MHz.

4.2.2 Radio Link Adaptation

Radio link adaptation is needed to adapt data stream from Modem to the characteristics of the medium. The main processing is physical parameter setting and frequency conversion.

A Frequency Conversion is then necessary in order to take the signal from baseband to microwave band and viceversa, and to allocate the signal in the requested band.

We have a double conversion both in the transmission and receiver Radio Units.

On the modulation side, the signal coming from Tamed Frequency Modulation is “raised cosine” filtered and up-converted to 350 MHz using a VCO (Voltage Control Oscillator) locked to the reference oscillator.

The IF signal is then amplified and put towards the Radio Unit interface. The incoming signal from Radio Unit towards the demodulator is at 140 MHz. It is amplified and demodulated down to base-band to extract its In-phase and Quadrature components.

It is possible to loop back the modulator output into the demodulator input using a local shift oscillator which carries the 350 MHz signal down-to 140 MHz.

Data needed by the Radio Unit board processor are sent via Radio Control Channel interface by means of an ASK modulator at 6.5MHz. Data provided by RAU processor to Modem are decoded by a ASK demodulator working at 4.5MHz.

4.2.3 Modulation

In order to exploit in the most effective way the available bandwidth, a Tamed Frequency Modulation (TFM) is used. The specific modulation technique is then a Constant envelope Quaternary Phase Shift Keying (C-QPSK).

In the C-QPSK modulation the complex envelope is always on the Unit circle and its position in the decision instants is one of the eight points depicted in the Figure 41. on page 7.

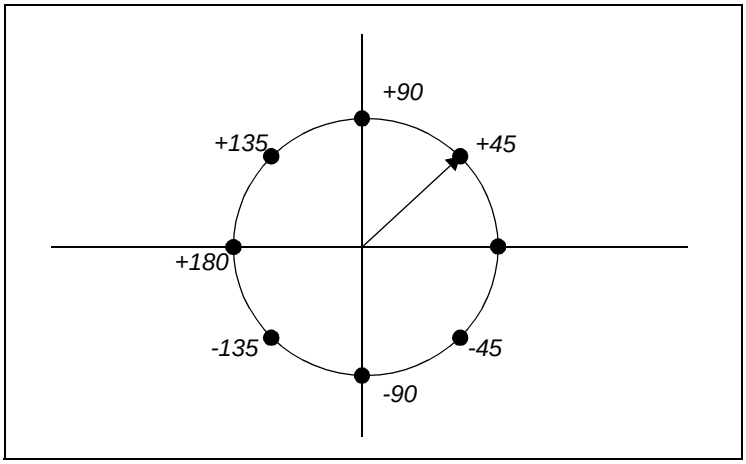

Figure 41. TFM Constellation Diagram.

The C-QPSK modulated signal is generated by setting, according to the bits stream to be modulated, the control voltage of a VCO (Voltage Control Oscillator) with five different levels (+1, +0.5, 0, -0.5, -1), which generates the corresponding five different phase shifts (+90, +45, 0, -45, -90 degrees) of the complex envelope during one bit time.

The digital circuit which generates the oscillator control voltage level is depicted in the Figure 42. on page 8.

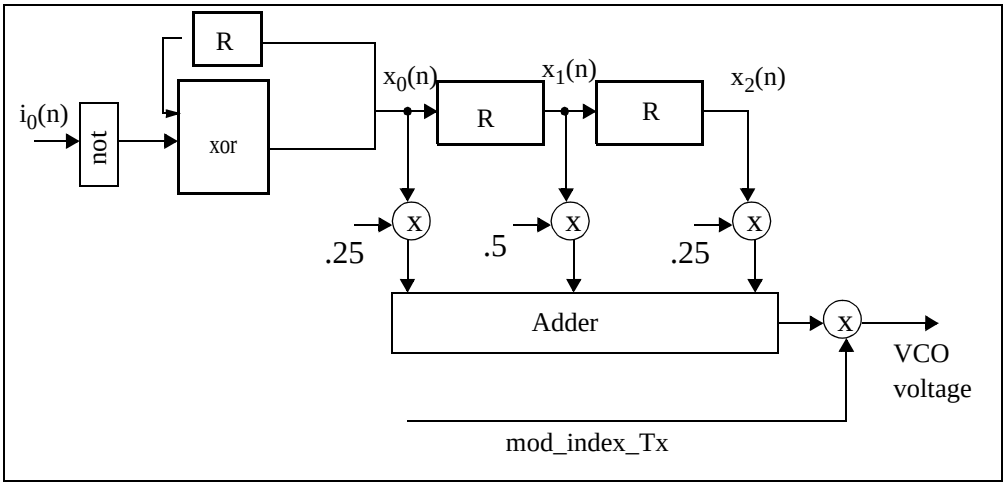

Figure 42. Modulator scheme.

The bits stream at the modulator input generates a voltage level which depends on the value of the modulation index (mod_index_Tx). When the modulation index is 1 there is not the need to correct the voltage levels generated by the digital circuit; while when the modulation index is not equal to 1 these levels must be compensated in order to have phase shift of +/-45 and +/-90 degrees at the modulator output.

The modulation index signal in the transmission side (mod_index_Tx) is extracted by the remote demodulator and fedback to the modulator by Radio control loops. The channel symbol at the output of the modulator depends on its internal state; the output voltage level depends on the bits $i_0(n)$, $x_0(n)$ and $x_1(n)$ in the Figure 42. on page 8.

4.3 Logical Link Control Layer

The LLC is a sublevel of the Data Link Layer and its main task is to determine the structure of the information frame and provide a transmission error control and a robustness of the transmission link in part by a scrambling function.

4.3.1 TDMA/TDM Framing

There are three primary access methodologies for the connections between the ATs and RNs: TDMA, FDMA and CDMA. The best suited access scheme for a specific system is dictated by the traffic behaviour of the end users. In particular TDMA systems can be designed to handle very fast dynamic allocation capacity, which is requested for statistical multiplexing of bursty traffic sources.

In our approach we estimate that the packed switched traffic is predominant in the small and medium sized business sector, motivating the advantages of statistical multiplexing and the choice of TDMA.

TDMA/TDM access technique foresees the access to the shared medium is done in different time intervals called timeslots.

TDMA refers to the uplink Radio channel and TDM to the downlink radio channel. In uplink direction the access has to be managed because of the concurrent requests from terminals whereas in the downlink direction there is no contention as data streams come from a backbone network.

Up and Downlink may be separated in frequency, i.e. Frequency Division Duplex (FDD) or in time (Time Division Duplex, TDD). In TDD systems the radio frame is divided into a downlink and uplink section, offering a flexible allocation of the up and downlink capacity.

TDD is typically used in wireless LANs where no consistent delay is introduced between transmission and reception and the up and downlink sessions are basically synchronous. In MINI-LINK BAS system, where the delay between transmission and reception can be of a few timeslots, a guard time between up and downlink section of the frames has to be inserted in order to avoid collision between timeslots.

This guard time reduces the throughput of a system, especially if it is designed for low latency. FDD systems, on the other hand, allocate a fixed proportion between up and downlink capacity. Residential users are likely to request asymmetric up and downlink capacity.

The MINI-LINK BAS system is therefore designed as a FDD system with a full flexibility of instantaneous capacity allocation in the up and downlink per AT and connection.

4.3.1.1 The Downlink TDM Frame

In the following figure the structure of the downlink TDM frame, together with the slot format, is depicted.

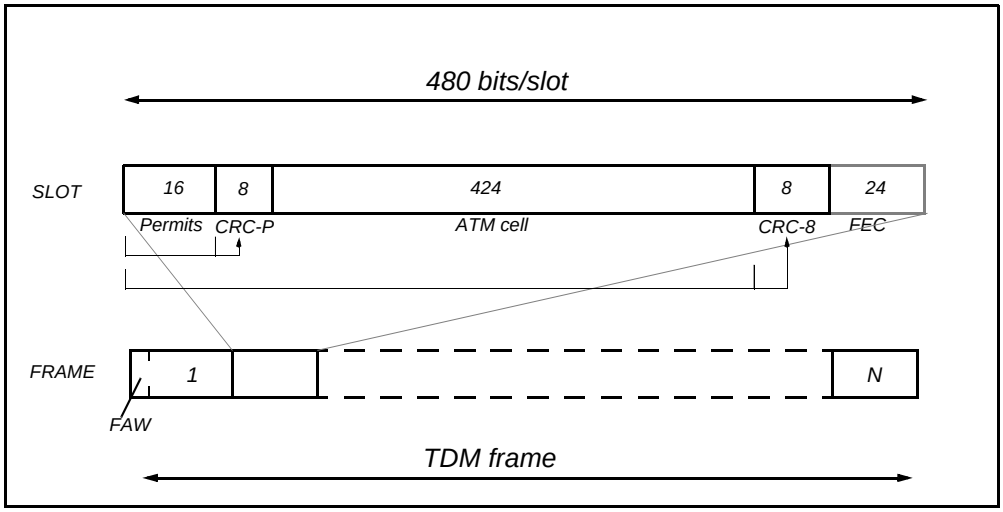

Figure 43. Downlink TDM frame.

The downlink TDM frame is made of N timeslot, where N can be set to 80 or 128 (default value). The ATM cell is carried together with the Permit field, needed in the MAC protocol, in the TDM slot structure.

Permit field is checked by a CRC-8, named CRC-P, and discarded if errors are detected. The whole information, included permits, CRC-P and the complete ATM cell, is error checked by a CRC-8. This code is used to allow for fault handling and performance monitoring (the CRC-8 errors are counted per NU).

Furthermore 24 bits are dedicated to the Forward Error Correction function. The actual way according to which FEC bits are processed is explained in the physical layer relevant section.

The frame length cannot be freely chosen, but together with the MAC polling period as depicted in the following table, where the time duration of the frame is reported too.

MAC Polling Period	Downlink TDM Frame
20 Slots	80 Slots (1ms)
32 Slots (Default)	128 Slots (1.6ms)
80 Slots	80 Slots (1ms)

The polling of all NUs is done in consecutively slots, which means that 64 NUs are polled in 8 slots. The above mentioned length of Radio frame will give a period time of 1-2 ms.

The FAW is the Frame Alignment Word used for Frame Synchronization. It is composed by the first group of Polling Permits plus the correspondent CRC-P code.

4.3.1.2 The Uplink TDMA Frame

The uplink TDMA frame has basically the same structure of the downlink TDM frame. It is made of N timeslots, where N can be set to 80 or 128 (default value), each timeslot being 480 bits wide.

There are different kinds of slots in order to support MAC protocol and ATM cell transport. Structure of timeslots is depicted in Figure 44. on page 12.

Some fields of timeslot structure are common to all kind of timeslots, namely Head Guard, Tail Guard and Preamble fields.

Head and the Tail are made up of five bits each and are inserted at the beginning and at the end of the upstream slot respectively. They are meant to reserve time to the Terminal transmitter for switching on/off.

Preamble is made of 20 bits and is inserted after the Head field. It is meant to allow the Radio Node receiver to get frequency locking in order to demodulate properly the remainder of the timeslot itself.

Head, Tail and Preamble bits are added by the Modem in the NU when building up the upstream slots and are terminated in the NCU of the Radio Node.

A CRC-8, calculated over the ATM cell including payload, is used in the upstream link to allow for better fault handling and performance monitoring.

Control timeslots are used in the MAC protocol for carrying queues status (requests) from Terminals to the Radio Node. Control timeslots are made of 8 Minislots, each of which is 60 bits wide.

Requests in Minislots are checked by a CRC-4 and if errors occur the request is discarded.

Ranging slot has a specific format as it is used in the ranging procedure. Terminal Identity and Unique Word are functional to the ranging procedure, a CRC-16 is foreseen for ranging information validation.

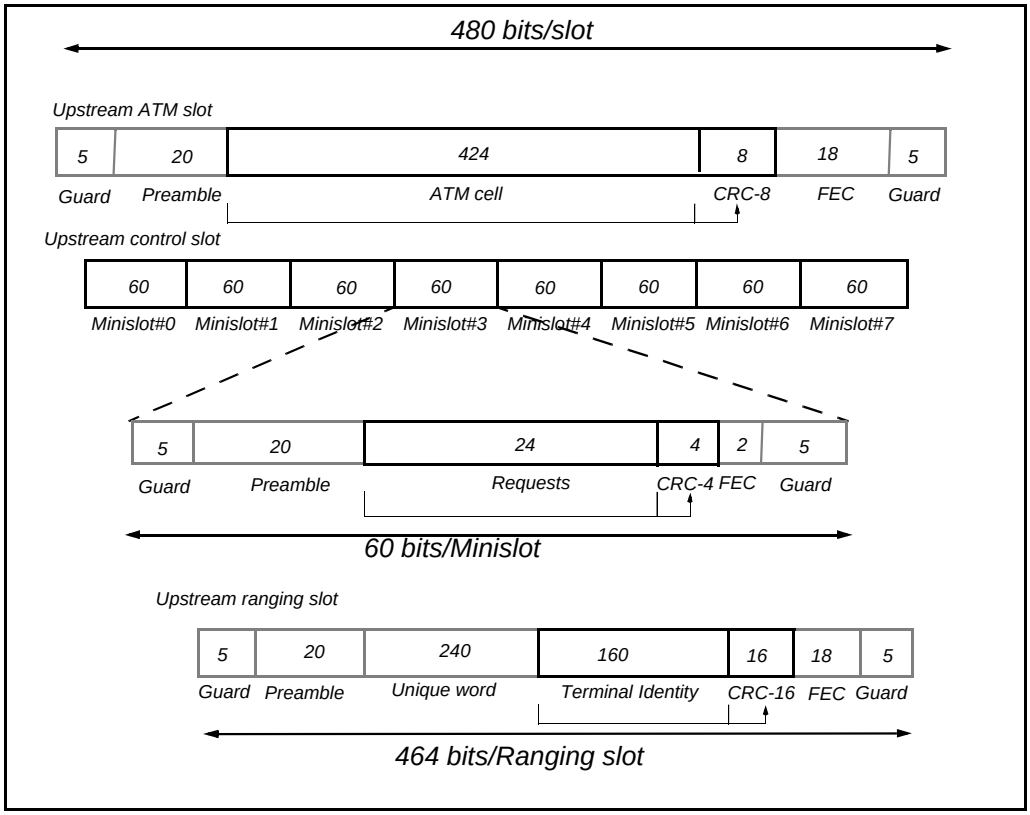

Figure 44. Uplink TDMA slot structure.

4.3.2 Frame Alignment

Frame alignment for the Radio frame is performed by using the first group polling permit plus the CRC-P as a Frame Alignment Word.

Frame recovery is achieved in the NU by detecting the FAW. This unique pattern marks the beginning of each Radio frame. Two consecutive FAWs will be far apart as many bits as specified by the frame format.

When FAW is detected for three consecutive times, the receiver in NU can be assumed as aligned to the transmitting Radio Node. If FAW is not detected in the expected position for four consecutive times, then the receiver in NU can be considered to have lost the frame alignment to the transmitting NCU and consequently a Loss Of Sinc is issued.

4.3.3 Scrambling

Data stream received from the MAC layer is scrambled in order to shape the spectrum, to provide enough transition for clock recovery purposes, to make the transmitted spectrum independent of the content of the transmitted data and to support security of data.

Scrambler is synchronous with the TDMA/TDM frames; at the beginning of a TDMA/TDM frame the scrambler register is preset to a known value. This value can be either fixed (all “1”s) or derived from the security key (20 ASCII characters).

In the Radio Node the slots received from the MAC Unit are scrambled, FEC encoded and modulated. The data stream is then converted to analog signal, frequency up-converted and sent towards the outdoor Radio Unit.

The signals coming from the outdoor Radio Unit are frequency down-converted and translated to a digital data stream, which is then demodulated, FEC decoded, descrambled and sent to the MAC Unit, where the ATM traffic is terminated.

Frame Alignment World, Guards and Preamble are not scrambled.

4.3.4 Forward Error Correction

Error performance is a major issue for wireless ATM systems. Two main error sources are expected:

- errors due to propagation anomalies, mainly rain outage;
- errors due to interference from neighbouring cells.

Forward Error Correction (FEC) capability is foreseen in the Physical Layer to improve robustness to transmission impairments. As a penalty this code introduces some overhead that decreases the system throughput.

A Wagner Soft Parity FEC is used as it is a robust and relatively simple method that requires low overhead and hence saves valuable capacity to user data.

FEC bits are inserted in each timeslot in addition to the original MAC packet data stream. The FEC bits are spread unevenly over the slots in such a way to better protect information fields related to the MAC protocol than the payload.

FEC is able to correct one error in the protected field. As demodulation process cause double adjacent errors, fields covered by FEC are bit interleaved in order to ensure that the double adjacent errors generated by the demodulation process will result in one error in a field covered by the FEC.

The MAC protocol demands that downstream and upstream slots have a different format, even though they have the same length.

As a consequence a different number of FEC bits will be added, which means that the downstream and upstream Radio links will be FEC protected in a different way, 24 extra bits on the downlink and 18 extra bits on the uplink, 2 extra bits in a minislot and finally 18 extra bits in a ranging slot.

4.3.5 Performance Monitoring

Facilities are foreseen in order to support the Quality Performance Monitoring in the Logical Link Control Layer. Instead there is no specific evaluation of PM at MAC layer.

Evaluation of Performance are mainly based on the mismatch detected on the byte referred as CRC-8, as this byte is meant to detect errors in a complete TDMA/TDM slot encompassing then both ATM cell and permit field.

The performance parameters are evaluated per NU both in uplink and downlink, as there are actually different physical links for each NU.

In order to do this in the uplink the Radio node has to take in account the sending NU whereas in the downlink the NU can monitor all TDM slots.

Performance Events provided for the physical layer are:

- **UAT/AT**: Unavailability/Availability time;
- **ESR**: Errored Second Ratio;
- **SESR**: Severely Errored Second Ratio;
- **BBER**: Background Block Error Ratio.

In order to evaluated the above Performance Events following parameters are counted:

- Number of received TDMA/TDM slots;
- Number of CRC-8 errors on uplink (calculated over the complete TDMA slot) or missing TDMA slots (for measurement on Physical Layer);
- Number of received correct TDMA slots;
- Number of received TDMA slots;
- Number of CRC-8 errors on downlink (calculated over permit, CRC-P and the ATM cell).

Some additional Performance parameters not foreseen by ITU standards are evaluated:

- received RF power (Max, min., average);
- output RF power (Max, min., average);

Further details on Performance Monitoring can be found in the relevant section.

4.4 MAC Layer

A fundamental feature for a flexible wireless broadband access system is an efficient MAC protocol. A fast Dynamic Resource Allocation (F-DCA) is the key to handle bursty traffic.

The medium access algorithm in the MINI-LINK BAS system is optimized to handle bursty data traffic but efficiently handles also constant bit rate (CBR) and circuit emulated services.

The MAC protocol is accomplished by the MAC functions in the Node and Terminals. The MAC function in the Node acts as Master whereas Mac functions in the terminals act as Slave.

The master MAC in the Node polls each terminal about the status of the queues, that correspond to request for access the shared medium by the Network Units.

Depending on these terminals requests the master MAC will assign permits to transmit in uplink direction to the different terminals. The slave MAC functions in the Terminals analyse the incoming permits and take the correct action depending on type of Permit.

The general idea is that no Terminal is allowed to send data in uplink direction, unless it has received an explicit permission to do so from the master MAC in the Node.

Actually the master MAC in the Node issues different types of permits for different functions:

1. ATM permit: the specified NU is allowed to send one ATM cell (CBR or UBR).
2. Polling permit: a number (8) of NUs are allowed to send requests toward the Node.
3. Ranging permit: the specified NU is requested to sign on.
4. Blanking permit: this corresponds to nothing being sent upstream.

When allowed by the above types of permits, a NU will send a slot back to the Node:

1. ATM slot: includes one ATM cell from the NU. If no ATM traffic cell is available, an idle cell will be sent instead.
2. Control minislot: including queues status in the NU.
3. Ranging slot: the Modem will use this slot to measure distance and power of the NU.

The structure of the Permit Field is depicted in Figure 45. on page 16.

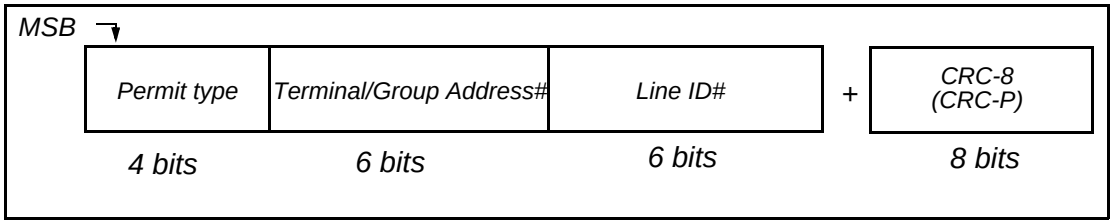

Figure 45. Downlink permit field plus CRC-8.

The Permit field allows 16 different Permit types and has a capability to address up to 64 NUs and for each NU can specify 64 lines (VC connections).

In the Permit field is also foreseen a CRC-8 aimed to check for error and validate the information. In case of errors detection the permit is deemed invalid and discarded.

In the following table the different types of Permit are reported together with a description of the usage and the addressing capability.

Permit description	Permit type field value (4 bits in hex)	Terminal/Group Address field (6 bits in hex)	Line ID # field (6 bits in hex)
Null (Blanking)	0x0	0x00	N.A.
CBR polled	0x1	Terminal Address	N.A.
CBR scheduled	*0x2*	*Terminal Address*	*Line ID #*
Spare	0x3-0x5	N.A.	N.A.
VBR real time	*0x6*	*Terminal Address*	*N.A.*
VBR non real time	*0x7*	*Terminal Address*	*N.A.*
UBR	0x8	Terminal Address	N.A.
Spare	0x9 - 0xC	N.A.	N.A.
Ranging	0xD	Terminal Address	N.A.
Spare	0xE	N.A.	N.A.
Request polling	0xF	Group Address	N.A.

The Permits “CBR scheduled”, “VBR real time” and “VBR non real time” are not exploited in release R1.0 and are foreseen for future use.

Terminal identification is done through the terminal address for which 6 bits are provided. Therefore up to 64 terminal can be addressed. Terminal are grouped in pools of 8 in order to minimize the bandwidth

usage in the polling procedure. A terminal group is identified through the 3 most significant bits of the Terminal address.

Assignment of new terminal always begins at 0 and uses lowest possible free Terminal Address number in order to reduce the number of Terminal groups to minimize capacity usage for polling and to permit a regular frame alignment.

In the following figure the structure of the request field is reported. The request fields are sent from Terminals to the Node in answer to Node Polling.

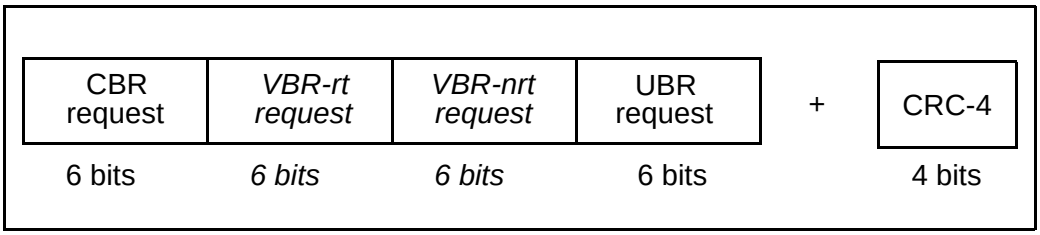

Figure 46. Request field.

Note that “VBR-rt” and “VBR-nrt” requests will not be exploited in release R1 and are foreseen for future use.

The request field contains the present buffer status of the addressed NU in terms of the number of ATM cells that are in each buffer at the polling instant. The maximum request value for each queue is 63, that, together with the polling rate, limits the maximum achievable data rate for a Terminal.

Three values of the Polling cycle are possible. For each of these cycles the possible maximum bit rate is calculated for an AT which is always authorized to transmit its cells (Capability, which is not an effective band).

Capability is calculated considering the maximum value which can be reported in the relative Request field in the Uplink stream (see the next table).

With polling cycle of 1ms, these request fields can handle up to 26.7Mb/s per NU. With a polling interval of 0.4ms, we can handle the full upstream capacity on one NU, that is >37.5Mb/s.

Polling Frequency	ATM Cells Rate	Data Rate
1 ms.	63 KCells/s	26.7 Mb/s
0.4 ms.	157.5 KCells/s	66.7 Mb/s
0.25 ms.	252 KCells/s	106.8 Mb/s

4.4.1 Sign-on

The sign-on procedure is aimed to bring a Terminal into service. Sign-on could be required either for a new Terminal to be brought into service (Initial Sign-On) or for a Terminal that lost contact with Node because of a failure occurrence.

Initial sign-on is always initiated by command from the Control Processor CP.

A unique number or string, called Terminal Identity, is associated to each Terminal. The Terminal Identity is set by an Access terminal Craft Tool (ACT) during installation and is stored in nonvolatile memory.

The Terminal Identity must also be set in the CP from Element Manager in order to make the sign on successful.

The sign on procedure foresees two sub procedures to be accomplished, namely the distance ranging and the power ranging. After the completion of the distance and power ranging a little time is required to allow Control Loops to get lock condition before the sign on procedure is assumed to be completed.

4.4.2 Distance Ranging

Distance ranging is made when a NU has to be signed on. The purpose of this procedure is to measure the distance to the new NU, and then to adjust the delay to a desired value.

In fact all NUs are to be located virtually at the same distance, measured in delay time, from the Radio Node. This delay is fixed to a reference value (the Maximum Round Trip Delay, RTD) and is calculated between the moment at which a data permits is emitted from the Node to the moment at which the corresponding slot is received.

This adjustment is done by setting a programmable delay in the Modem at the considered NU.

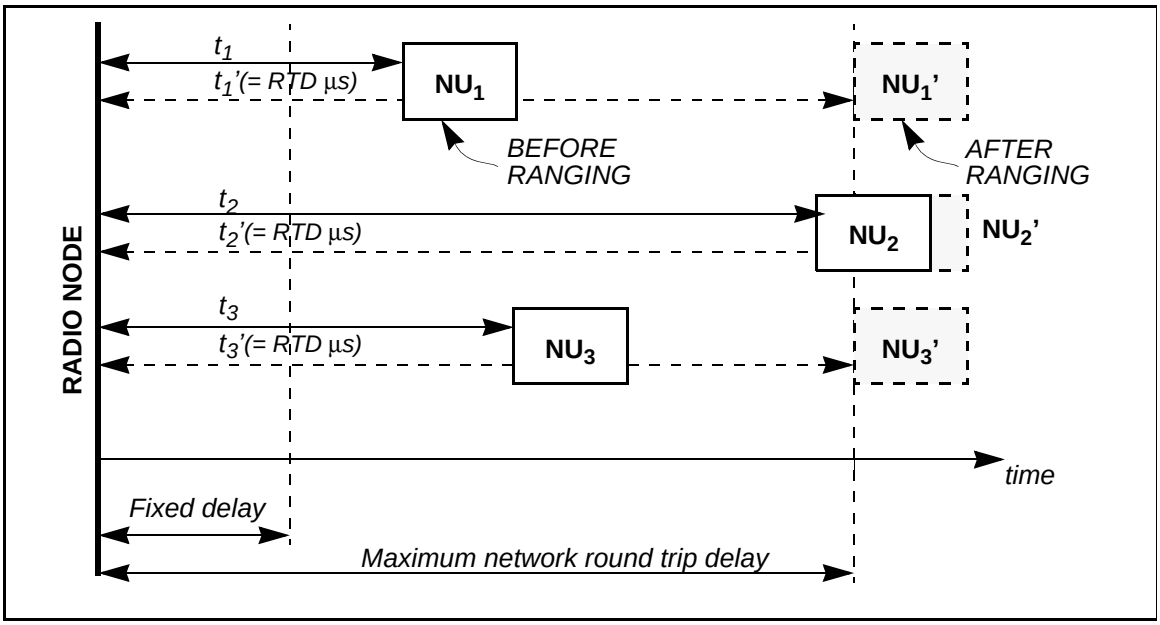

Figure 47. Distance ranging procedure.

4.4.2.1 Total Sign-on Time

The total sign-on time is worked out from the moment that the MAC DP in the Radio Node receives a request to add a new NU, to the time that a response is sent back to the CP, and it will be approximately:

1. Five initial broadcast cells are sent with 100ms spacing (400ms).
2. Ranging Procedure (min. 20ms; Max 500ms).
3. Five final broadcast cells are sent with 100ms spacing (400ms).

Allowing for some processing overhead the total sign-on time will thus be 0.9-1.5s.

4.4.3 Limitation of Used Bit Rate

In order to make the system have nearly the same performances as the number of served Terminals changes a limitation of the air capacity is provided.

In Multi Access systems, performances are related to the number of ATs connected to the same RN, in terms of throughput. To avoid the changing of performances for a certain AT a “limitation of used bit rate” functionality is implemented.

This functionality performed by the MAC can reduce the used bit rate on the Radio link, by inserting idle cells in slots that could carry traffic cells. The percentage of not used slots is configurable from CP-EM.

In order for the operator to be able to select the usage of bandwidth on the MINI-LINK BAS Radio link, both downstream and upstream, a function to exchange possible traffic slots downstream and upstream with slots containing idle cells is built-in.

Downstream the Framer controls which slots are used for traffic, and can in that way limit the downstream bandwidth. Upstream it is the DP that entirely controls how many slots will be used for traffic and the DP can in that way limit the upstream bandwidth.

4.5 Processing Flow

A wireless broadband access system has been previously presented. The motivation beyond the choice modulation scheme, FEC Encoding, TDMA technique and the principles of the MAC protocol, has been discussed.

We can summarize all the functionality handled by the Physical, Logical Link Control and MAC Layers representing Uplink and Downlink processing flow. An overall scheme of the composition of both the Uplink and Downlink streams is depicted in the Figure 48. on page 21 and Figure 49. on page 22.

4.5.1 Downlink Processing Flow

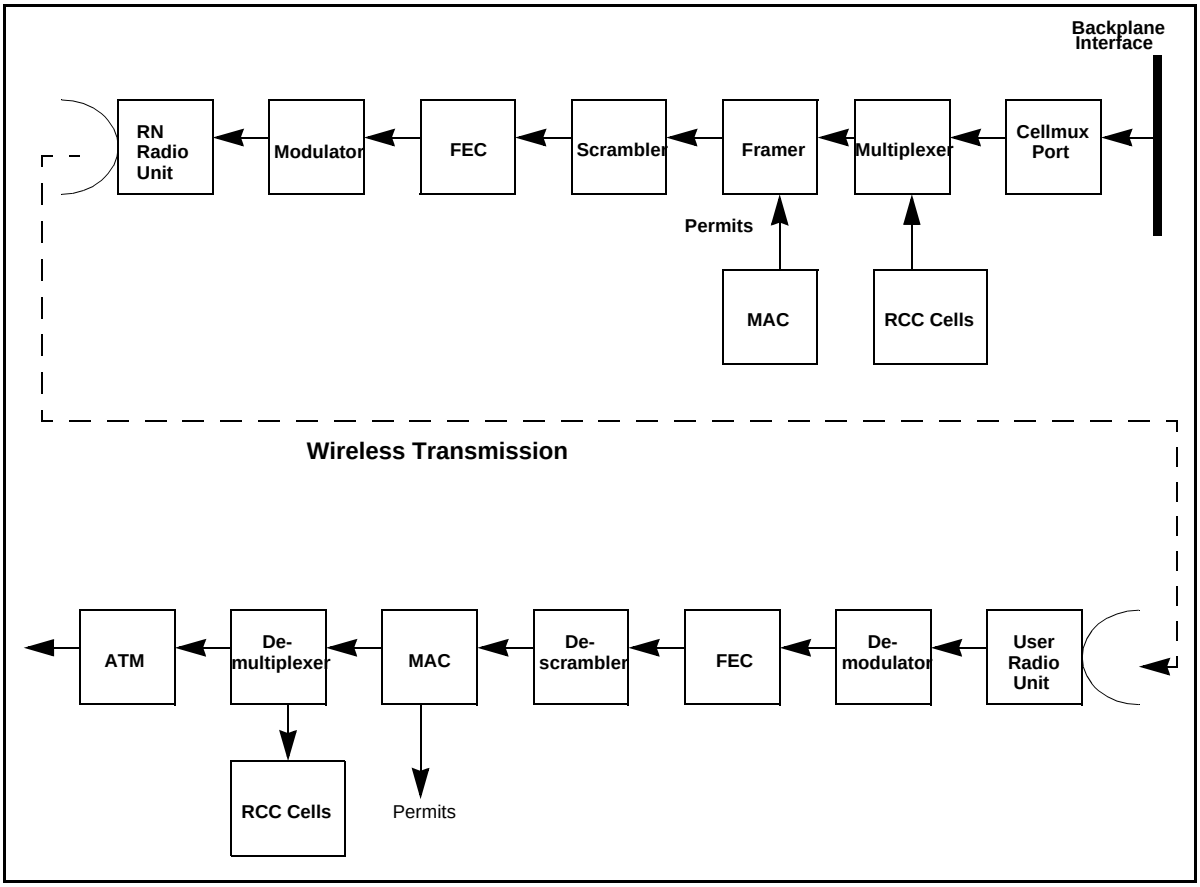

Figure 48. Block diagram for the downlink stream.

In Figure 48. on page 21 the processing flow in the downlink direction is described.

ATM traffic cells are multiplexed with the ATM cells which transport the RCC information (RCC is the Radio internal Control Channel for Radio Node to AT communication).

ATM cells received from the Cellbus interface are buffered until they can be placed in their proper position in the downlink frame. Buffer size for the CBR services are SW configurable up to 8000 cells whereas for the UBR services up to 60000 in total. There is a separate buffer for control system cells, and these will have the highest priority in the downstream path.

When no ATM cell is available when required by the generated frame, an idle cell will be internally generated and put in that position.

In a second step ATM cells are inserted in the slots of the TDM frame together with MAC permits by the MAC function. The proprietary TDM frame is built by the Framer block.

CRC error check fields are added to the downstream signal to allow for fault handling and performance monitoring.

Finally the TDM Framed data are first Scrambled, FEC Encoded in order to provide transmission robustness and then Modulated.

On the Access Terminal side the same operations in the reverse order are done but in particular, after the Demodulation and FEC Decoding an EBER function is provided in order to detect excessive bit error ratio on data stream, aimed to check the Radio link quality to this NU.

Then the stream is Descrambled, the MAC information is extracted by the MAC block, and the Demultiplexing Function distinguishes between ATM cells and the RCC cells.

At last data are delivered to the ATM handler for ATM layer processing (see the relevant section).

4.5.2 Uplink Processing Flow

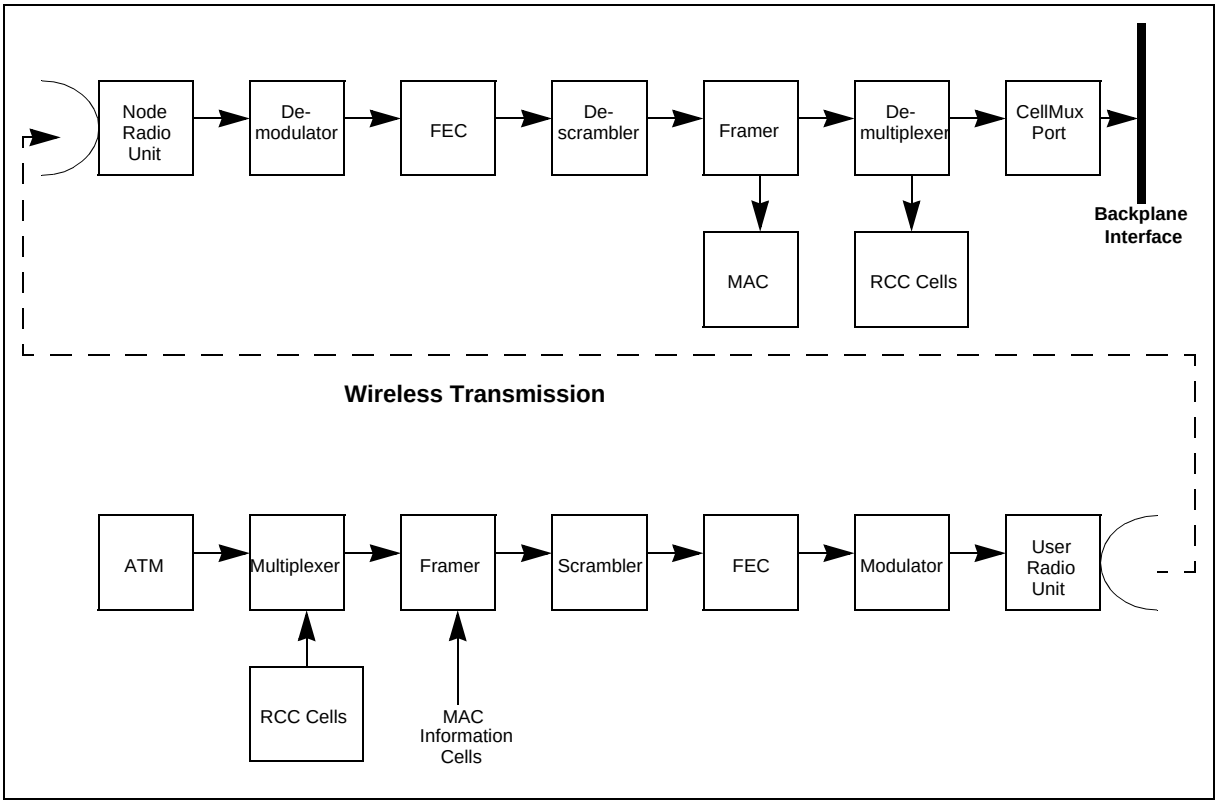

Figure 49. Block diagram for the uplink stream.

In the figure above the building up of the Uplink flow is described in terms of functional blocks.

The incoming flows of ATM cells are stored in two buffers depending on the class of service and are multiplexed with the Control cells, which are queued in a separate buffer and have the highest priority, so they are inserted in the outgoing frame as soon as possible.

As allowed by downlink sent permits, ATM cells are inserted in the available TDMA timeslots and sent upstream by the NU.

Depending on the type of permits, traffic cells or Minislots are inserted. Minislots contain the requests to transmit based on traffic contract and buffer filling level.

Then ATM traffic is first Scrambled, FEC Encoded and Modulated. On the Radio Node side the received stream is demodulated and checked for Header errors (corrupted cells are discarded).

After the FEC Decoding an EBER function is provided to detect if the FEC decoder has to correct more errors than it can handle, that is the Radio link quality from the NU is unacceptable.

Then CRC over the whole ATM cell, included the payload is checked and used for fault handling and performance monitoring. In case a MAC Control cell with requests (minislot) is received, the request information, after error checking, is sent to the MAC function.

The Demultiplexer distinguishes between the ATM traffic cells and the RCC control cells passing the ATM traffic cells on to the CellMux port and to the backplane interface.

The Radio internal Control channel is using ATM cells in uplink direction, as well as in downlink. When these upstream cells, which have a specific VPI/VCI value, arrive to the Deframer, they are routed to a port which is connected to the Modem.

To identify from which terminal a slot is coming and what kind of data it contains, the RCC channel uses information on Terminal Address and Slot Content from the MAC function.

4.5.3 RCC Insertion

The Radio communication channel RCC is an internal channel for Node-AT communication. VC connections are dedicated to this purpose.

The frame format of the RCC packets is depicted in Figure 50. on page 23. A field address is foreseen in order to address the relevant terminal.

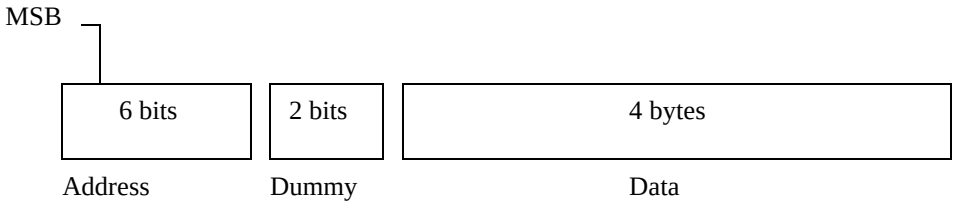

Figure 50. RCC frame format.

RCC packets are mapped into ATM cells as depicted in Figure 51. on page 24. Field address is mapped in the VPI field that uniquely identifies the addressed Terminal. A specific VCI value has been adopted for these cells.

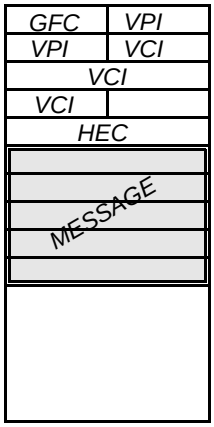

Figure 51. RCC communication cell.

5

MINI-LINK BAS End-User Services

5.1 Introduction

Small and medium sized offices require support for data and telephony traffic interconnection. Data traffic can be either internal, i.e. between the end-user Local Area Networks (LANs), or external i.e between the LAN and the Internet

In an analogous way the telephony traffic can be either internal, i.e. between the end user Private Branching Exchanges (PBXs), or external i.e. between the PBX and the Public Switched Telephony Network (PSTN). These different four interconnection cases are shown in Figure 52. on page 2 below.

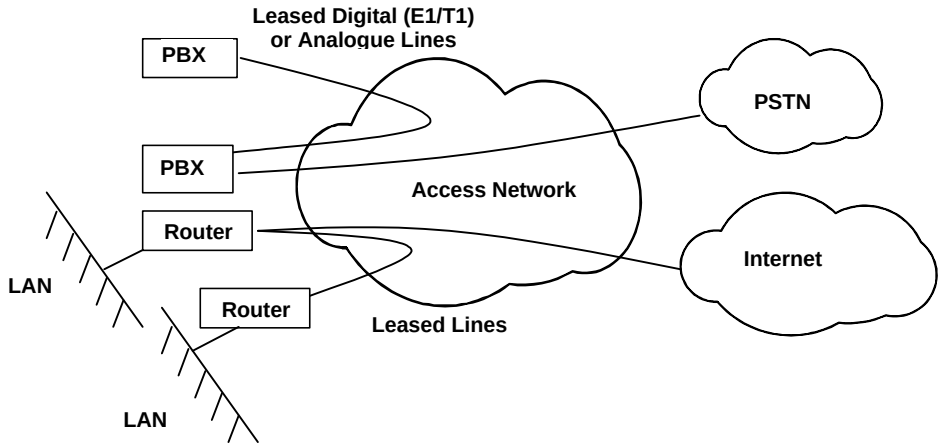

Figure 52. Different traffic interconnections needs.

Traditionally the services listed above have been offered to the end-user as leased lines. Therefore, the general approach, based on the infrastructure for the transport of telephony channels, has been to peak allocate the capacity to the end user, with basically a 64 kbit/s granularity.

As the traffic need of the end-user increases a fixed allocation of the capacity becomes more and more inappropriate since resources are booked in the network without taking into account the actual instantaneous traffic need of the end-user.

The dynamic allocation of the network capacity is the key for a successfully access network deployment. The MINI-LINK BAS offers unique performances for the traffic needs of small and medium sized offices and fast dynamic capacity allocation guaranteeing the operator a cost efficient use of the network.

The Customer premises placed MINI-LINK BAS NU can be equipped with up to 4 Service Units of three types, 10/100BaseT Ethernet, E1 or T1. Towards the core network, MINI-LINK BAS offers ATM and E1/T1 G.703, G.704 interfaces.

All services are supported through those interfaces mapping the user data on ATM Permanent Virtual Circuits (PVCs). The setting of the PVCs is handled by the operator via the MINI-LINK BAS EM.

High-speed internet access and data communication are provided through the built in 10BaseT Ethernet (IEEE 802.3) interface or a 10/100BaseT Ethernet Service Interface unit at the NU.

Telephony services and leased line replacements are supported through the Circuit Emulated interfaces E1 and T1 at the NU.

In the following sections we describe the support of the Ethernet and Circuit Emulated traffic through the MINI-LINK BAS. In section 4 we describe the Operational Characteristics of the services. We conclude this chapter with a description of the service classes that can be offered to the end users and the billing parameters.

5.2 Data Communication

In order to correctly provision the services on the MINI-LINK BAS, it is important to understand the different needs and requirements that arise using ATM as basic transport mechanism and the involved protocol stacks in the system, for example different Ethernet tunnelling and so on.

Two services are foreseen to be fundamental in any access network: High-speed Internet Access and Data Communication services, including Intranet services.

High-Speed Internet Access is regarded as an abstract term denoting several types of usages of IP based services including both real time and non real time services. As datacom nowadays carry all sorts of services, even video-on-demand, the datacom traffic set-up is not always unspecified-bit-rate (UBR), but could as well be constant-bit-rate, to secure e.g. a video flow of high constant bandwidth need.

In the typical deployment scenario for Internet Access and Data communication in MINI-LINK BAS it should be assumed that a LAN is present at the End User site. The LAN could be interconnected to the NU via a Router.

The router acts at the same time as a firewall to Internet and possibly as a gateway to other LANs of the same company. The Physical interface between the Router and the MINI-LINK BAS NU is an ethernet interface. The handling of the ethernet frames at the MINI-LINK BAS NU interface is shown in the following section.

5.2.1 Ethernet Bridge according to RFC 1483

The ethernet frames from the Workstations/PCs on the LAN attached at the Ethernet 10BaseT interface of the NU are encapsulated in AAL-5 payload and transported through MINI-LINK BAS on a UBR PVC to a router with an ATM interface at the ISP.

An optional edge router can be used to terminate the bridged Ethernet frames and to groom the ATM PVCs to only one PVC per ISP and to

provide ISP selection and accounting. The edge router can provide the support for tunnelling protocols in order to create virtual intranet solutions within the Internet. The edge router can also provide a frame relay interface for locations where the ATM backbone network is not deployed.

The OSI model for the MINI-LINK BAS handling of traffic on the ethernet interface is shown in Figure 53. on page 4 Note that the MINI-LINK BAS system acts as a totally transparent system to the different protocols run above the Ethernet interface. This interface can therefore be used both for LAN to LAN interconnections as for Internet/Intranet Access.

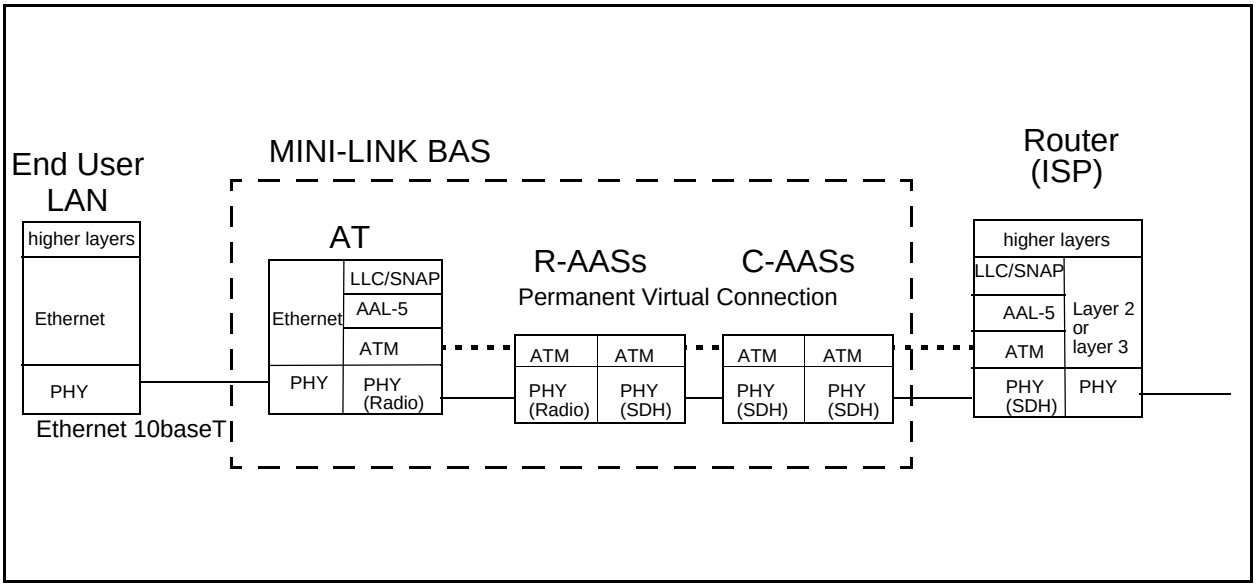

Figure 53. OSI model for Ethernet transport in MINI-LINK BAS.

The connection between the User port and the network port is set via the network management system as a UBR PVC through the whole MINI-LINK BAS (shown as a dotted line in Figure 53. on page 4).

End User Traffic is isolated from the air interface either by the Router at the customer premises and by the self-learning bridge function in the NU.

This ethernet bridge functionality is especially needed if no Router is present at the customer premises, since it learns the MAC addresses on the LAN and prevents ethernet frames for a local address to load on the air interface. 256 MAC addresses - up to 512 but only 256 statistically ensured - are stored in the bridge. During the learning period, some local frames may be forwarded to the air interface.

The lifetime of a given source address in the bridge table is approx. 900-1800 seconds. The Spanning Tree Algorithm (STA) is not supported in the AT. All broadcast/multicast messages are passed over the bridge.

The ethernet transceiver functions provides a 10Base-T interface for UTP connection and complies with IEEE 802.3/ISO 8802-3, Ethernet DIX V.2 frame format (Type field instead of Length field). The encapsulation of the ethernet frames is shown in Figure 54. on page 5.

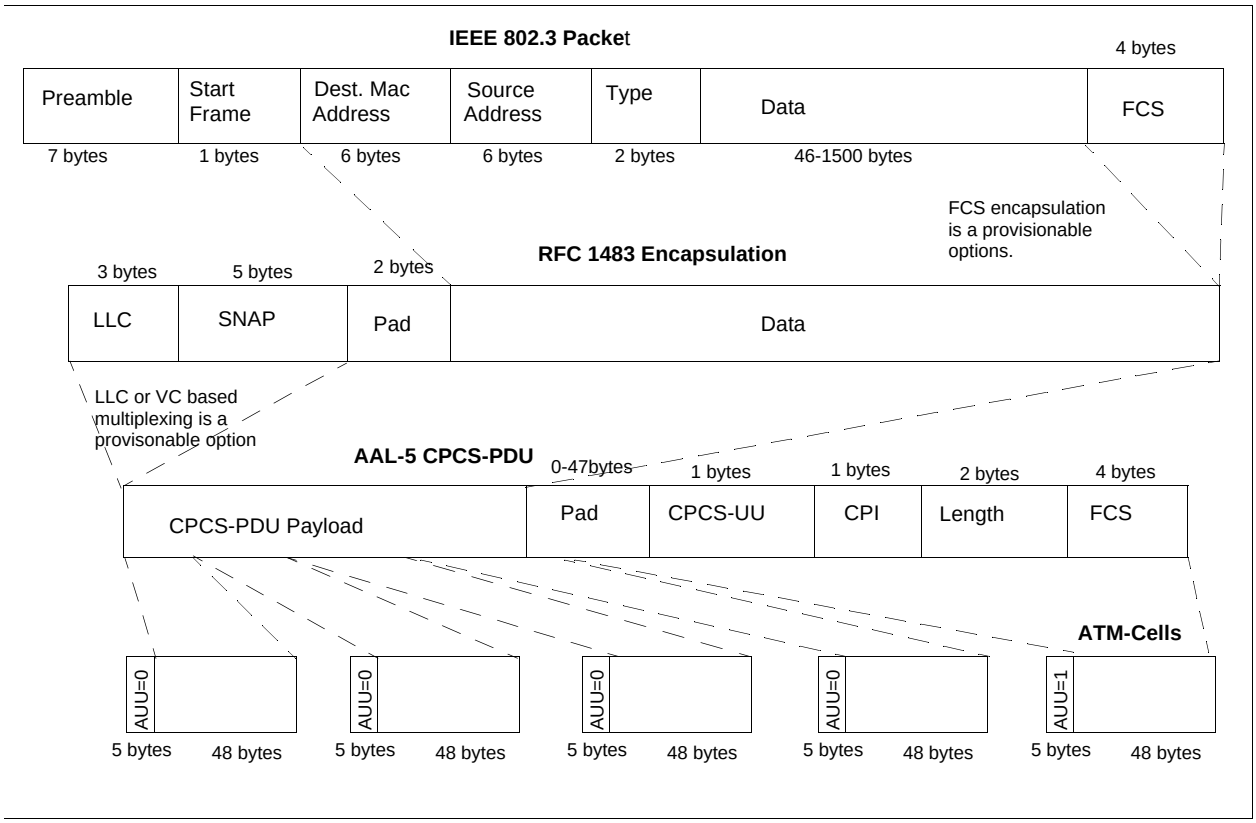

Figure 54. Ethernet encapsulation on ATM in the AT.

5.3 Circuit Emulated Services

Circuit Emulated End User services are supported in MINI-LINK BAS through the E1 and T1 interfaces at the NU. As in the case of data transport the Circuit Emulated services are provisioned via ATM Permanent Virtual Circuits. In the latter case, however, a fixed traffic capacity with guaranteed Quality of Service is required.

Therefore the PVC is based on a Constant Bit Rate traffic contract. The mapping of the Circuit Emulated services in the ATM cell is done in MINI-LINK BAS according to Circuit Emulation Service Inter-operability Specification AF-SAA-0032.000 of the ATM Forum, ITU-363 and ETSI ETS 300 363.

Two modes of operations are foreseen for the Circuit Emulated Services: the unstructured mode and the structured mode.

5.3.1 E1/T1 Data Stream Transparent Transport

The unstructured circuit transport allows “transparent” transport of E1/T1 point-to-point circuits over MINI-LINK BAS with their embedded facilities (Signalling and Maintenance information). The E1/T1 data is mapped into ATM cells via the AAL-1/UDT (Unstructured Data Transfer mode) adaptation layer.

The E1/T1 data stream can be either synchronous to the MINI-LINK BAS or plesiochronous, as the MINI-LINK BAS can be configured for timing transparency. The OSI model for the transparent transport of data stream is shown in Figure 55. on page 6

Note that the model shows the termination of the ATM PVC in a generic CE-board. This can be the CE-Board of the MINI-LINK BAS system placed in the R-AAS or in the CE-AAS or also any AT equipped with a E1 or T1 Service Interface Unit.

However any ATM equipment supporting the ATMF Circuit Emulation Service Inter-operability Specification AF-SAA-0032.000 can be used for the termination of the PVC.

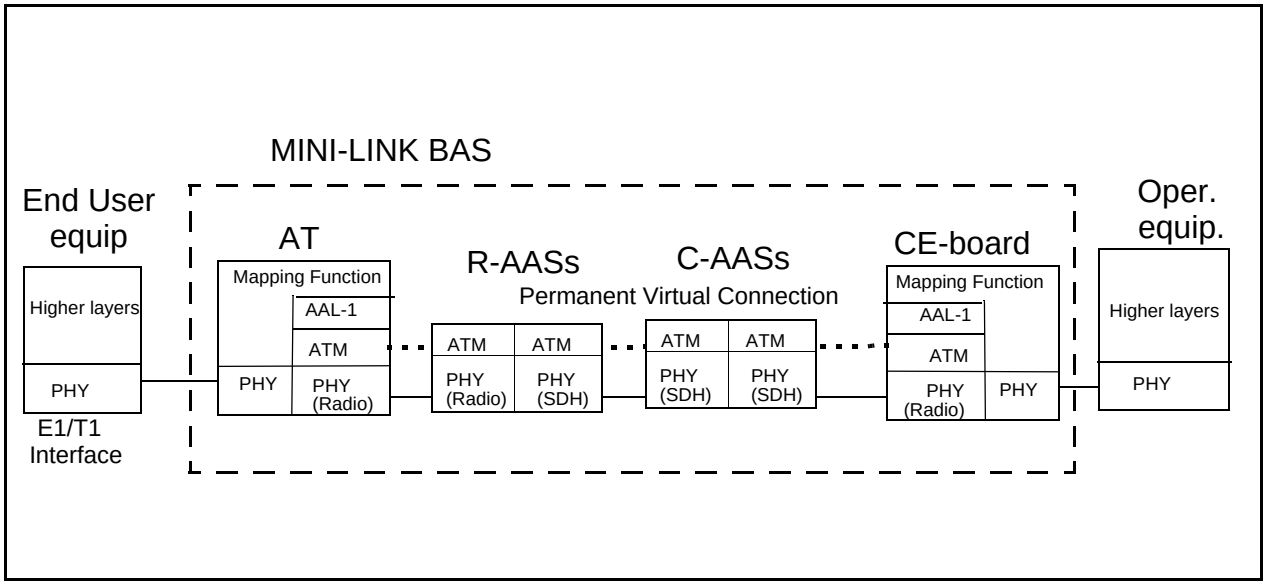

Figure 55. OSI model for transparent transport of E1/T1 data in MINI-LINK BAS

5.3.2 Structured E1/T1 transport

The transport of structured E1/T1 data is indicated for narrow-band services i.e. Nx64Kbps leased lines, typically used for switched telephony services (PBX-PBX interconnections and PBX-PSTN Interconnections) or non-switched data services (leased lines).

The structured circuit transport allows the transport of point-to-point fractional Nx64Kbps services with or without CAS; this transport mode makes an efficient use of the internal WBA system bandwidth.

In this case traffic segregation (grooming; i.e. the mapping of different AAL1 connections coming from different E1/T1 input links on the same E1/T1 output link) can be provided as the AAL1 connection carries user information and only its associated signalling.

The structured circuit transport also allows the transport of point-to-point fractional Nx64Kbps services with CCS resulting in bandwidth saving within the MINI-LINK BAS.

In this case since CCS signalling is not handled, only the direct mapping on a specific output E1/T1 interface is possible (i.e. all the user channels + the signalling common channel of one E1/T1 input interface can be mapped into one AAL1 connection and then re-mapped into a specific E1/T1 output interface). In other words, when CCS is used, grooming is not supported.

The 64 kb/s channels are mapped into ATM cells via the AAL-1/SDT (Structured Data Transfer) adaptation layer. The number of 64 Kb/s allocated in the T1 interface is configurable from 1 to N (24 or 32 depending on the type of interface) channels.

The OSI model for the transport of a structured E1/T1 data stream is shown in Figure 56. on page 7 As in the case of transparent transport of a E1/T1 data stream, the model shows the termination of the ATM PVC in a generic CE-board.

This can be the CE-Board of the MINI-LINK BAS system placed in the R-AAS or in the CE-AAS or also any AT equipped with a E1 or T1 Service Interface Unit. However any ATM equipment supporting the ATMF Circuit Emulation Service Inter-operability Specification AF-SAA-0032.000 can be used for the termination of the PVC.

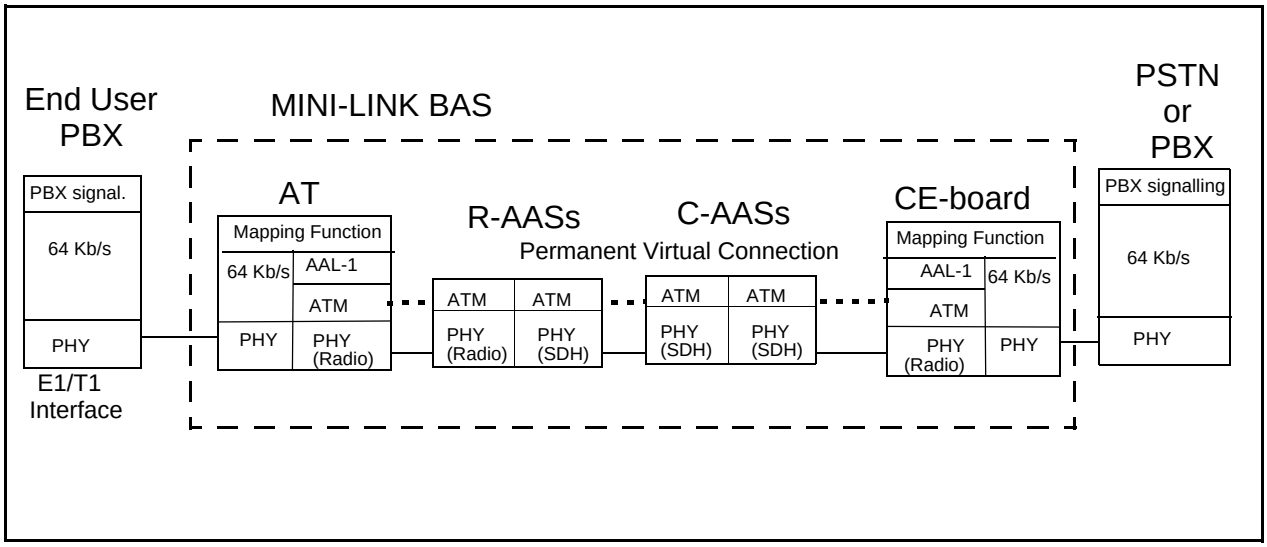

Figure 56. OSI model for transport of structured E1/T1 data in MINI-LINK BAS.

5.4 Operational Characteristics

5.4.1 Operation and Maintenance

The MINI-LINK BAS operation and maintenance is based on the MINI-LINK BAS Management System. Via the Management System the different applications Fault, Performance Monitoring, Configuration are available.

From the Configuration application the configuration of the system as well as the insertion of new ATs and boards are performed. The provisioning of the services is performed by setting up Permanent Virtual Connections between user service ports and network service ports.

5.4.2 End User Ports Interconnections

An important characteristic of the MINI-LINK BAS is the capacity of supporting internal connections between user ports without the need of an external switch or router.

Three types of connections are supported: between user ports **within the same Radio Node** without taking traffic resources from the C-AAS, between user ports **within two different Radio Nodes** in the same R-AAS without taking traffic resources from the C-AAS and between user ports **within Radio Nodes in different Radio shelves** without taking traffic resources from the core network.

5.4.3 Delays for Ethernet Traffic

The experienced delay on the Ethernet interface is heavily dependent on the whole chain of encapsulation steps that the information takes from application to application. Delay is therefore related to the TCP window size, the size of the IP packets and the size of Ethernet packets.

Additionally, since all ATM cells belonging to one Ethernet frame have to be received before sending the frame onwards to the Ethernet interface, a specific delay is inserted by the ATM transport layer.

Since one Ethernet frame can be up to 1500 bytes long, up to 32 ATM cells have to be received before the frame can be sent on the interface. As an example, at a speed of 4 Mbps this takes approximately 3.4 ms. This delay is present both in downstream and upstream direction.

5.4.4 Delays for CE traffic

The delay on Circuit Emulated traffic is due to four contributions: ATM packetisation delay, equipment buffering delay, MAC delay and transport delay.

The ATM packetisation delay is related to the time needed to fill one ATM cell with the Circuit Emulated data. This time is therefore dependent on the number of timeslots to be circuit emulated. A single 64 kbps timeslot requires approximately 6 ms for filling an ATM cell. The increasing number of Circuit Emulated timeslot obviously reduces this filling time.

Equipment buffers for synchronisation and slip contribute with a delay of the order of 0.3 ms. The MAC layer in the MINI-LINK BAS introduces a delay of the order of 1 ms.

The transport of cells over the air is of the order of 0.1 ms depending on the actual location. Its contribution to the total delay is therefore insignificant.

The delay for CE traffic is therefore of the order of 2-9 ms depending on the number of timeslots that are carried through the system.

5.5 Charging

The MINI-LINK BAS offers two Quality of Service to the end user to support the End User services:

- Constant Bit Rate (CBR) traffic, to support circuit emulated services, and
- Undefined Bit Rate (UBR) traffic, to support datacom services.

A Constant Bit Rate traffic contract implies that the customer is guaranteed the transparent transport of user data between E1 or T1 ports of the MINI-LINK BAS. The capacity needed for supporting the user traffic is semipermantely reserved in the MINI-LINK BAS.

A flat rate is the most adequate way of charging the user. Since MINI-LINK BAS supports Circuit Emulated Services with a granularity of single timeslots (64kbps), a similar granularity is applicable to the charging rate.

Data communication services are carried over UBR PVC connections. By definition UBR connections do not give a guaranteed traffic throughput, however by using traffic engineering dimension rules, different traffic contracts can be offered to the end user.

The traffic capacity in the MINI-LINK BAS is shared by the two service classes offered, CBR and UBR. The basic concept is that the total capacity of the air interface is first allocated to users signed for a CBR service contract.

The rest of the capacity is then shared by all users with a UBR service contract. Since the MINI-LINK BAS maintains traffic fairness between the ATs, the UBR traffic capacity per AT is at least equal to the total UBR available traffic capacity divided by the number of ATs within a Radio Node.

In order to maintain a level of service on the UBR service class regardless the traffic on the CBR class and the number of active ATs, a UBR limit factor can be configured. This factor is then adjusted when the number of ATs or the amount of CBR is varied.

The UBR traffic capacity per AT within a Radio Node, can therefore be expressed as:

$$UBR|_{AT} = \frac{TotUBR}{N|_{AT}} = \frac{(TotCapacity - TotCBR - UBRLimit)}{N|_{AT}}$$

where $UBR|_{AT}$ is the UBR traffic per AT to be delivered,

$TotUBR$ is the total UBR traffic in the Radio Node,

$N|_{AT}$ is the Number of active ATs in the Radio Node,

$TotCapacity$ is the total capacity of the Radio Node (78000 ATM cell/s),

$TotCBR$ is the total CBR traffic handled in the Radio Node, and

$UBRLimit$ is the limiting UBR factor

The Figure 57. on page 10 shows graphically the relation between the different traffic types assuming 4 ATs under the same Radio Node.

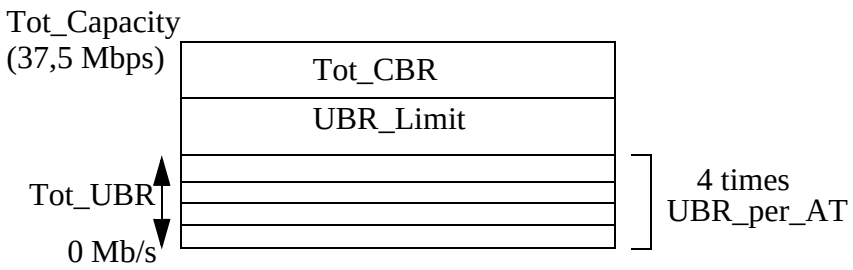

Figure 57. Traffic allocation in MINI-LINK BAS.

Following this approach it can be concluded that an operator can offer to all ATs within a Radio Node a minimum guaranteed traffic bandwidth

However since the AT handles the traffic from different Service Units in a fair way, end users under multiple ethernet interface in an AT would be allocated a fair fraction of the UBR capacity given to the AT.

The operator can therefore offer the following type of contracts:

- CBR with a granularity of 64 kbps

- UBR with a guaranteed throughput and a peak rate
- A fraction of the above contract if multiple users are connected to the same AT.

Note that all calculations should be done in terms of ATM cell taking automatically into consideration all kinds of overhead.

5.6 Dimensioning Example

In the following, we illustrate the different contracts with a practical example.

Consider a Radio Node with ten ATs each of which having a traffic need of sixteen 64kbps timeslots and an Ethernet interface. The operator dimensioning assumption is that the Radio Node will room up to 20 ATs and that the Circuit Emulated traffic within the Radio Node will not exceed 20Mbps.

The guaranteed UBR traffic per AT is given by the expression:

$$UBR|_{AT} = \frac{TotUBR}{N|_{AT}} = \frac{(TotCapacity - TotCBR - UBRLimit)}{N|_{AT}} =$$

$$= \frac{(78000 - 54600 - 0)}{20} \approx 1200(ATMcell)/s \approx 400kbps$$

In order to obtain the same throughput when the number of AT within the Radio node is only ten, the operator should set a UBR limiting factor equal to approx. 38700 ATM cells/s.

The peak rate for the UBR service is approx. 24000 ATM Cells per second or approx. 8,5 Mbps for the ATs.

If three customers are connected to the same AT, the guaranteed and peak rate for the UBR service class will be one third of the value mentioned above.