FCC ID:OPO199909010003

CMC [BV-BM2] Block Diagram

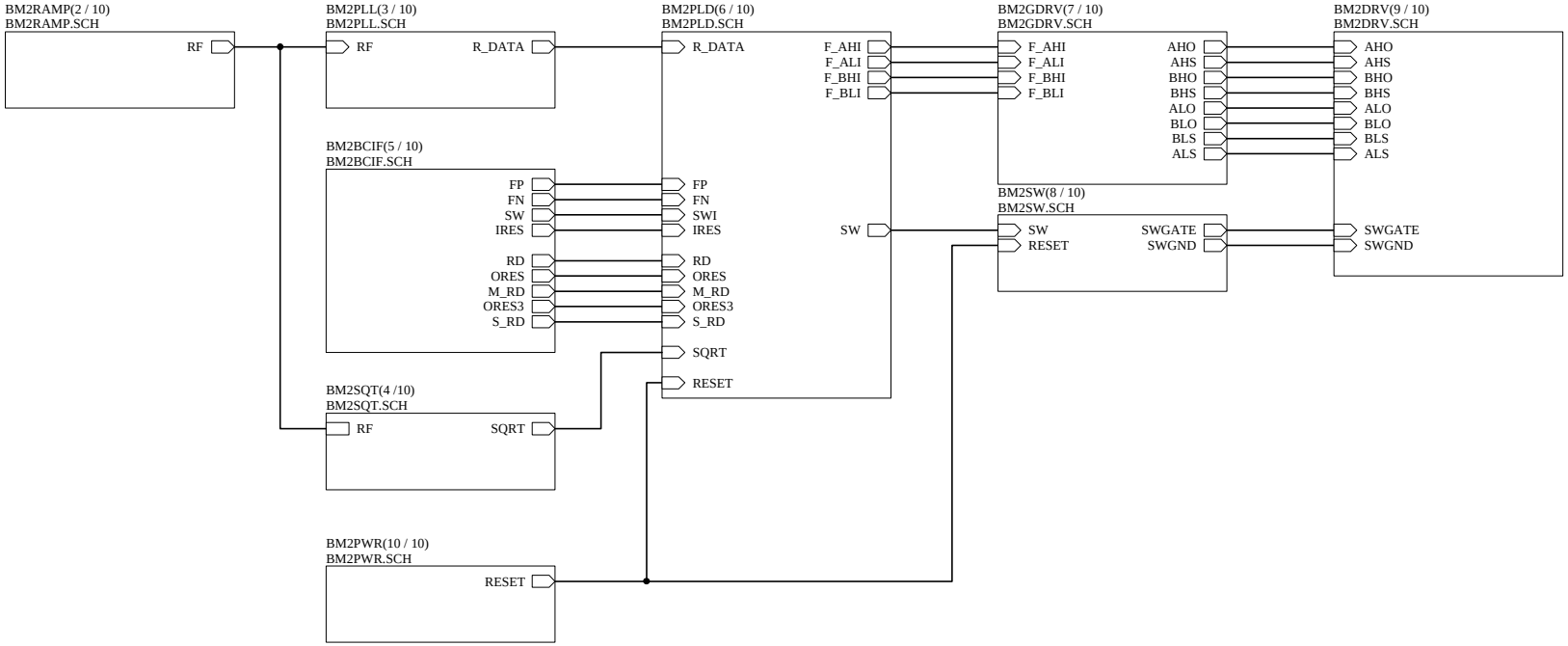

SHINKO ELECTRIC CO.,LTD	1	
	2	
	3	
	4	
Title	Communication Modem Controller (CMC) [BV_BM2]	
Size A4	Number Y37A19302	Revision 1.0
Date: 9-Nov-2000	Sheet of 1 / 10	
File: D:\DATA\..\BVBM2.PRJ	Drawn By: S.SAKAKI	

FCC ID:OPO199909010003

BVBM2_RAMP

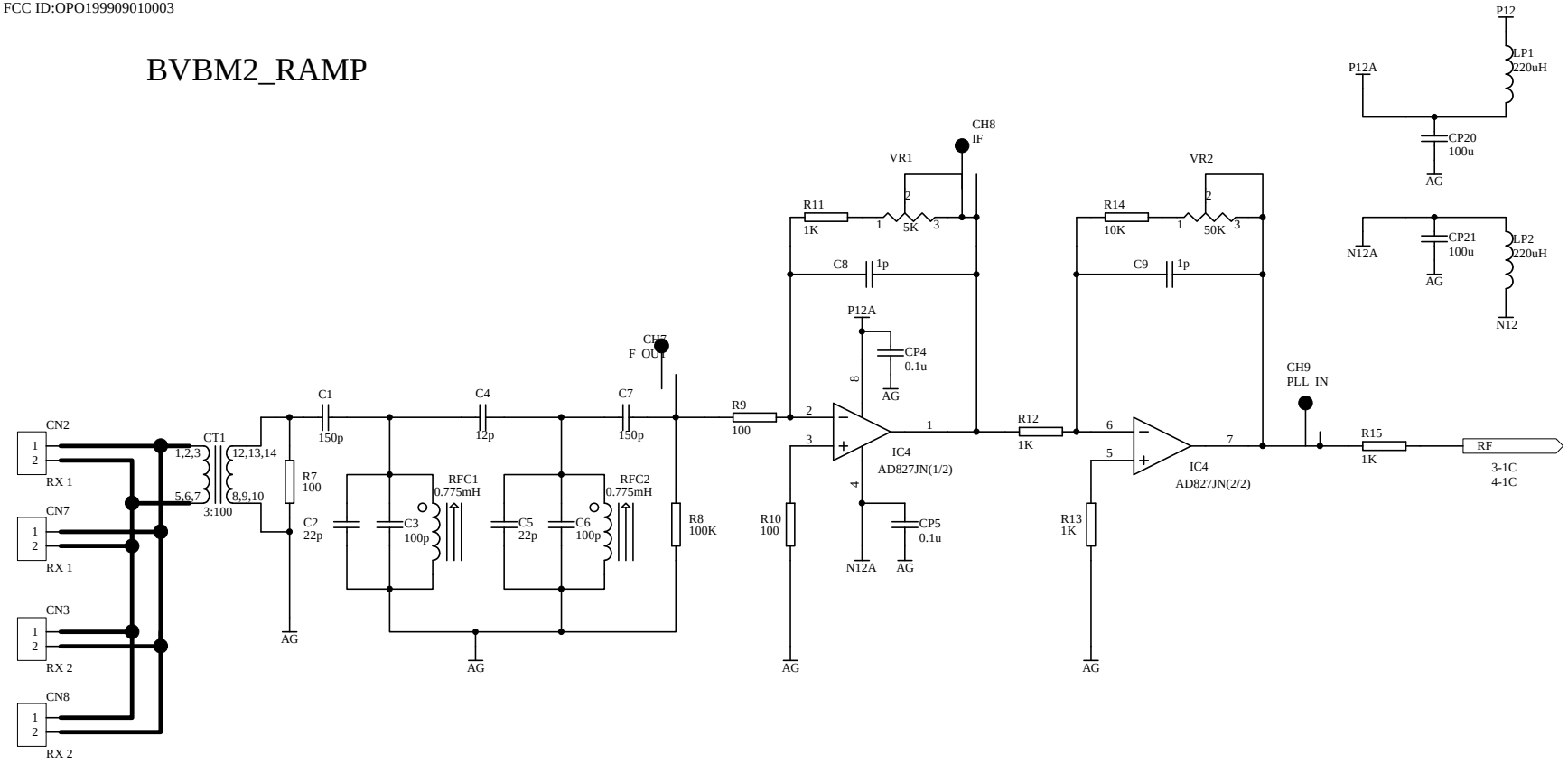

SHINKO ELECTRIC CO.,LTD	1		
	2		
	3		
	4		
Title	Communication Modem Controller (CMC) [BV_BM2]		
Size A4	Number Y37A19302		Revision 1.0
Date: 9-Nov-2000		Sheet of	2 / 10
File: D:\DATA\..\BM2RAMP.SCH		Drawn By:	S.SAKAKI

FCC ID:OPO199909010003

BVBM2_PLL

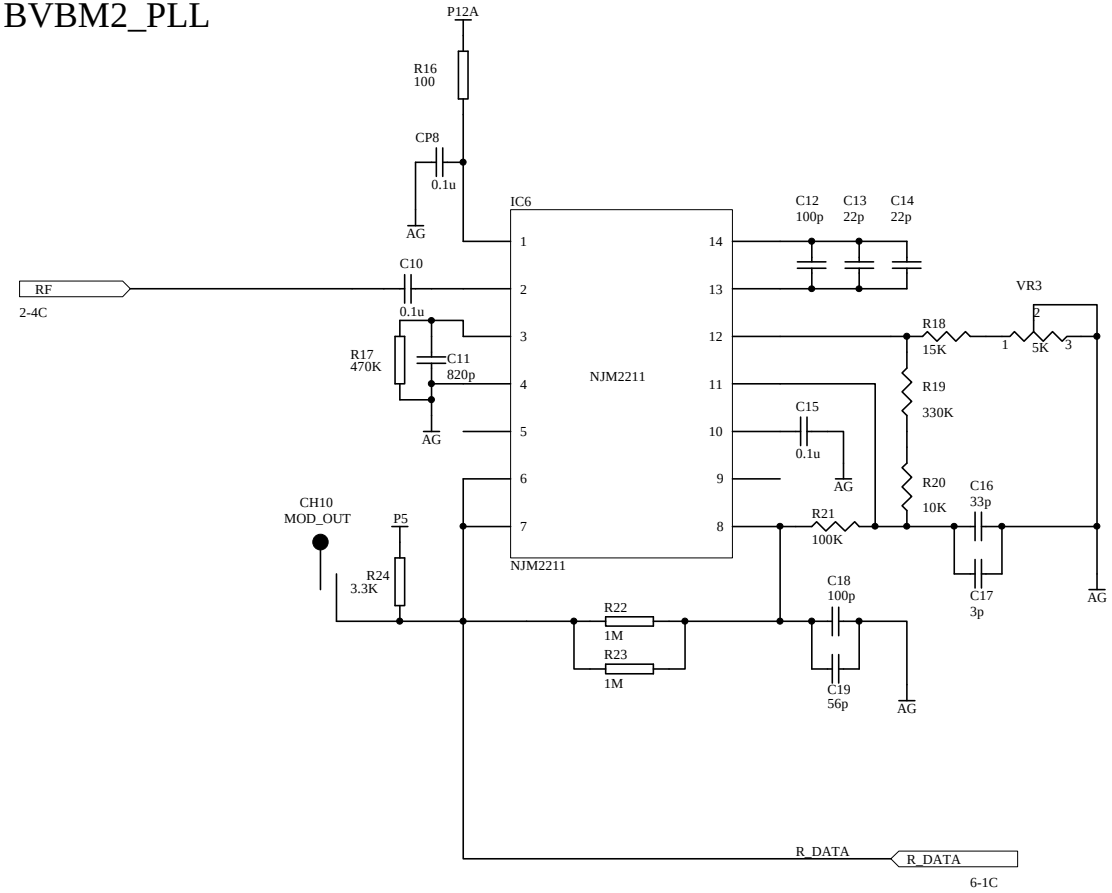

SHINKO ELECTRIC CO.,LTD	1	
	2	
	3	
	4	

Title: Communication Modem Controller (CMC) [BV_BM2]

Size	Number	Revision
A4	Y37A19302	1.0

Date:	9-Nov-2000	Sheet of	3 / 10
File:	D:\DATA\..\BM2PLL.SCH	Drawn By:	S.SAKAKI

FCC ID:OPO199909010003

BVBM2_SQT

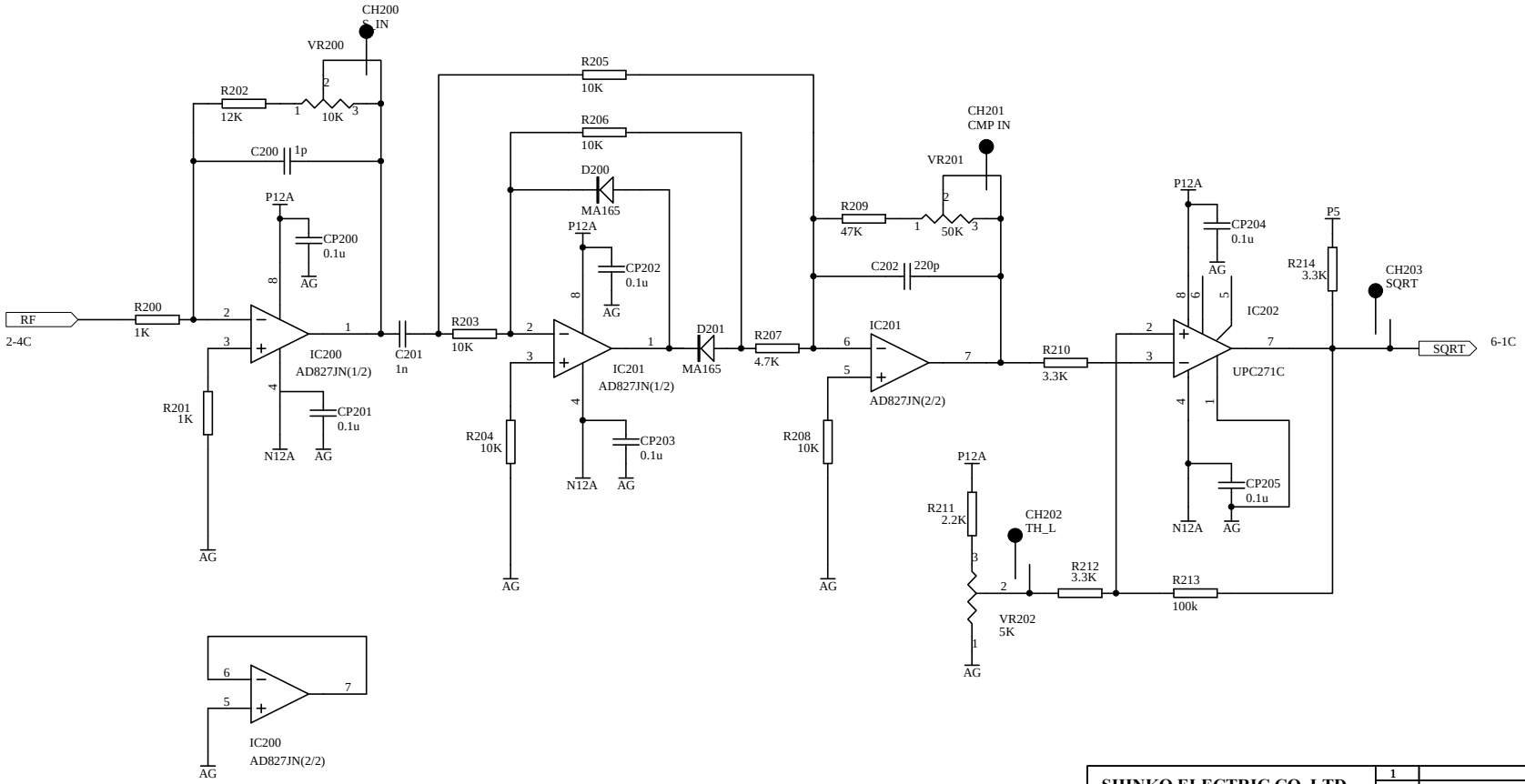

SHINKO ELECTRIC CO.,LTD	**1**	
	2	
	3	
	4	

Title: Communication Modem Controller (CMC) [BV_BM2]

Size	Number	Revision
A4	Y37A19302	1.0

Date:	9-Nov-2000	Sheet of	4 / 10
File:	D:\DATA\..\BM2SQT.SCH	Drawn By:	**S.SAKAKI**

FCC ID:OPO199909010003

BVBM2_HSTI/F

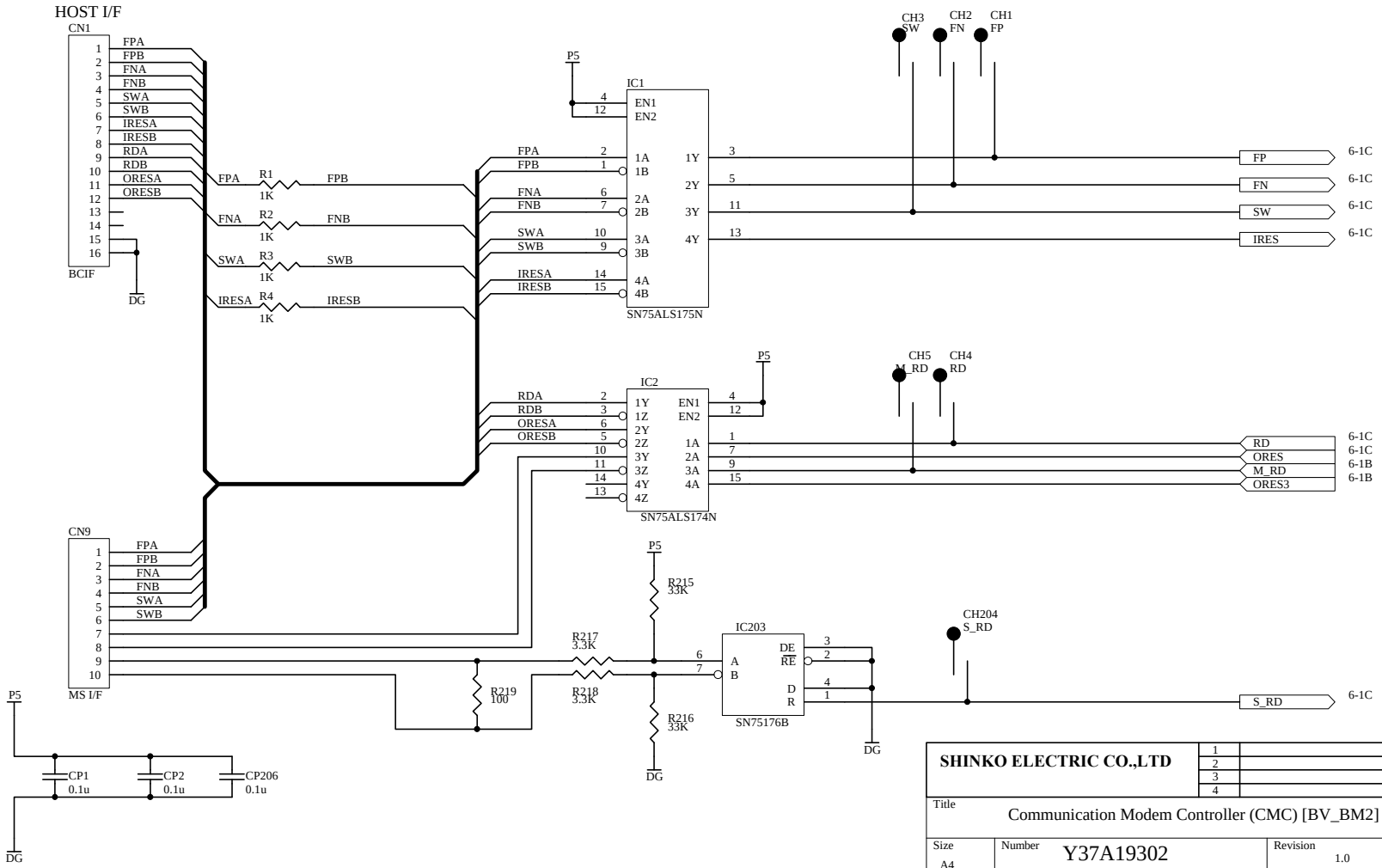

SHINKO ELECTRIC CO.,LTD	1	
	2	
	3	
	4	

Title: Communication Modem Controller (CMC) [BV_BM2]

Size	Number	Revision
A4	Y37A19302	1.0

Date:	9-Nov-2000	Sheet of	5 / 10
File:	D:\DATA\..\BM2BCIF.SCH	Drawn By:	S.SAKAKI

FCC ID:OPO199909010003

BVBM2_PLD

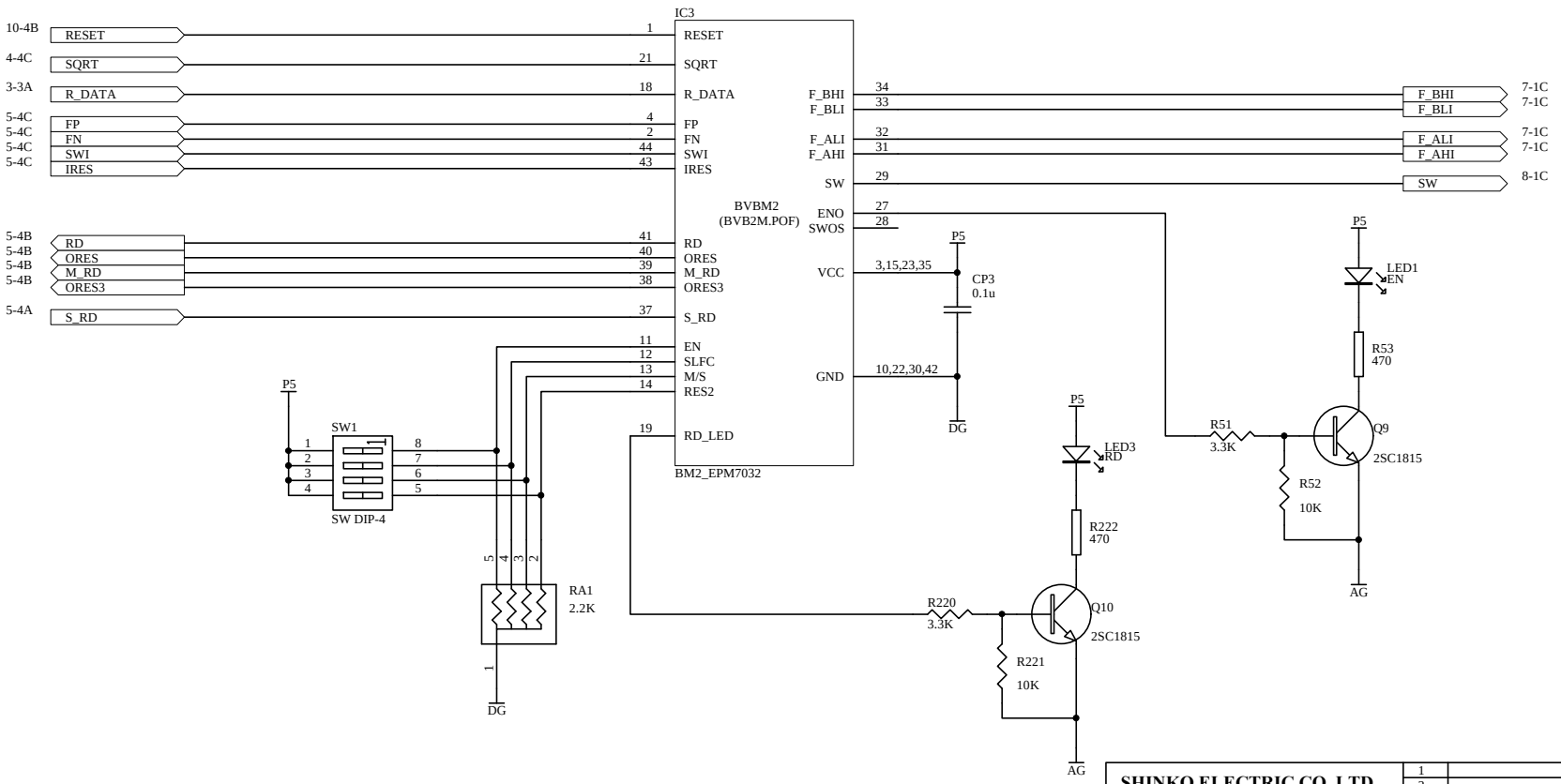

SHINKO ELECTRIC CO.,LTD	1		
	2		
	3		
	4		
Title	Communication Modem Controller (CMC) [BV_BM2]		
Size A4	Number Y37A19302	Revision 1.0	
Date: 9-Nov-2000		Sheet of 6 / 10	
File: D:\DATA\..\BM2PLD.SCH		Drawn By: S.SAKAKI	

FCC ID:OPO199909010003

BVBM2_GDRV

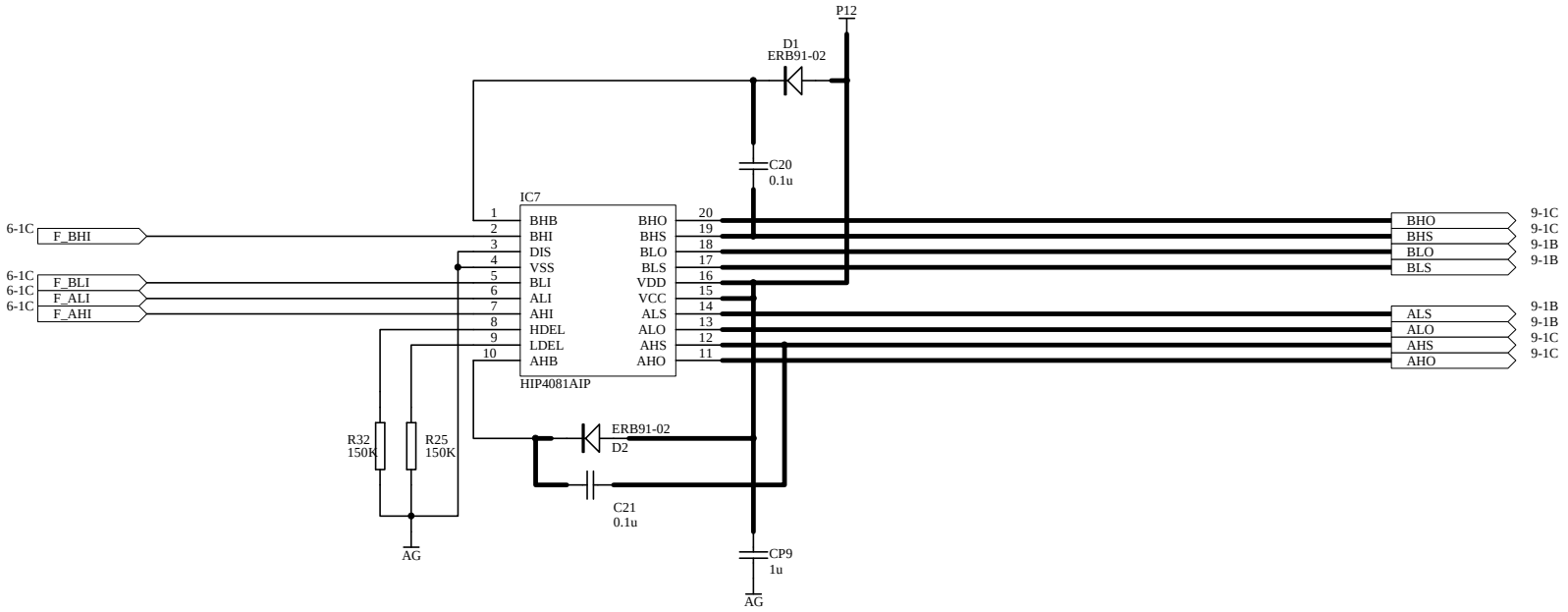

SHINKO ELECTRIC CO.,LTD	1	
	2	
	3	
	4	
Title	Communication Modem Controller (CMC) [BV_BM2]	
Size A4	Number Y37A19302	Revision 1.0
Date: 9-Nov-2000	Sheet of 7 / 10	
File: D:\DATA\..\BM2GDRV.SCH	Drawn By: S.SAKAKI	

FCC ID:OPO199909010003

BVBM2_SW

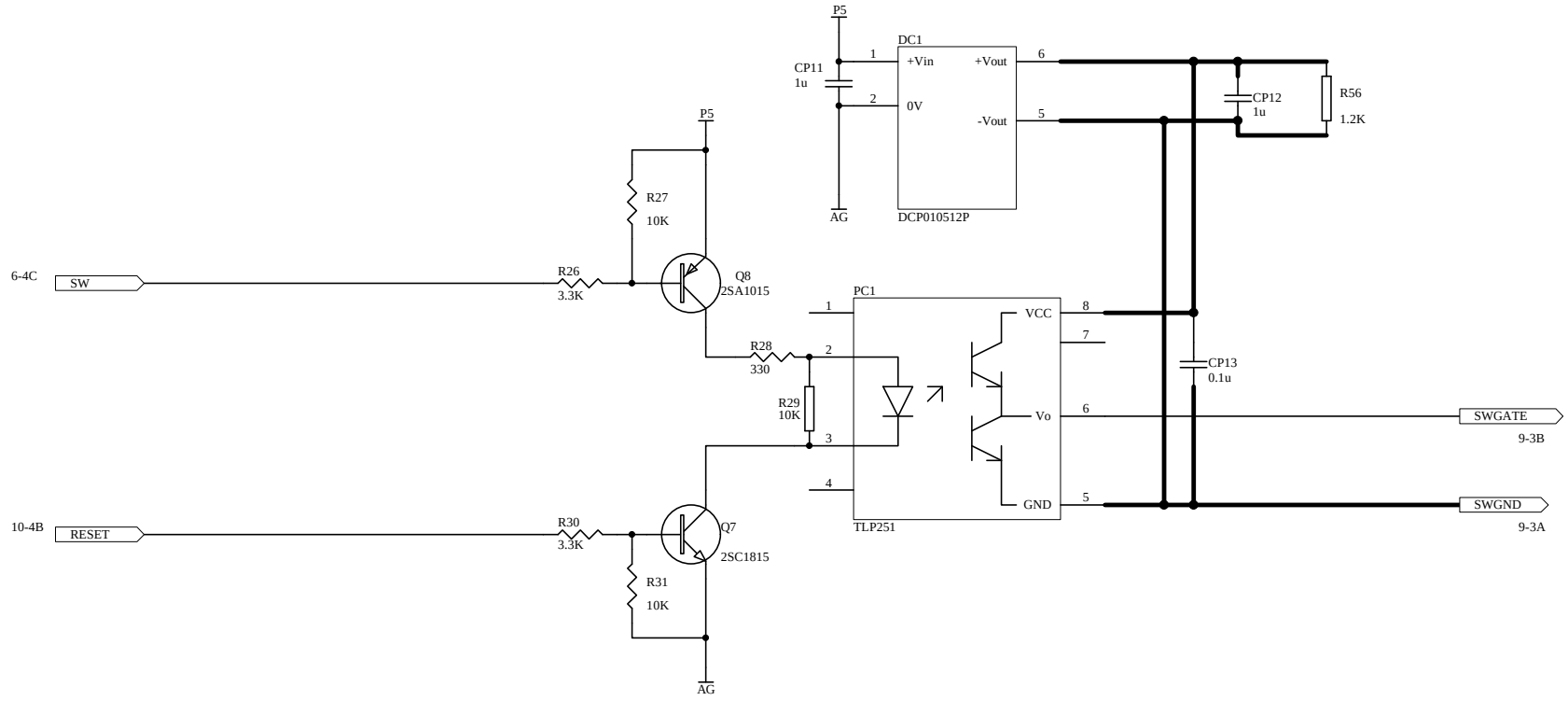

SHINKO ELECTRIC CO.,LTD	1	
	2	
	3	
	4	

Title: Communication Modem Controller (CMC) [BV_BM2]

Size	Number	Revision
A4	Y37A19302	1.0

Date:	9-Nov-2000	Sheet of	8 / 10
File:	D:\DATA\..\BM2SW.SCH	Drawn By:	S.SAKAKI

FCC ID:OPO199909010003

BVBM2_DRV

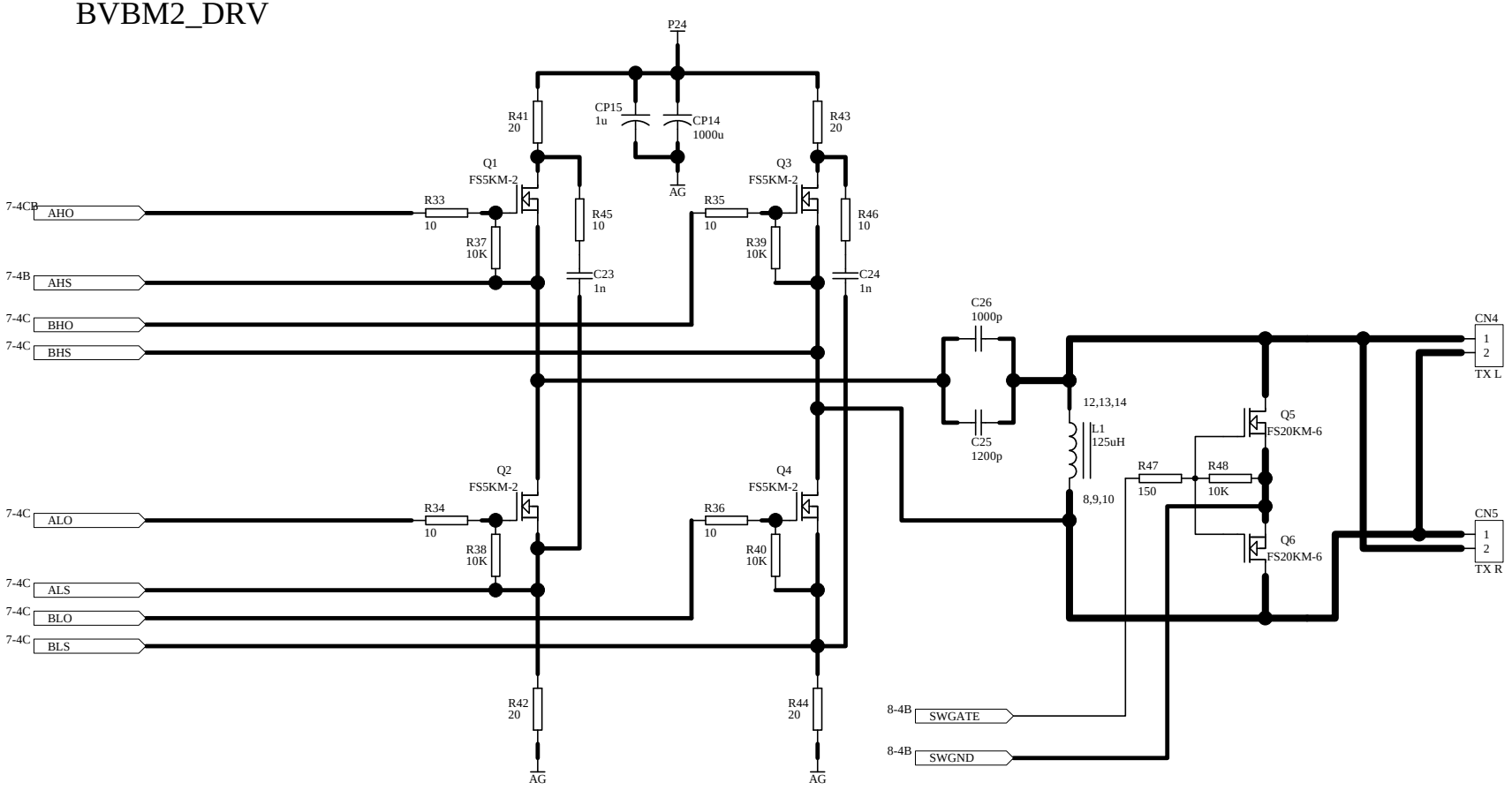

SHINKO ELECTRIC CO.,LTD	1	
	2	
	3	
	4	
Title	Communication Modem Controller (CMC) [BV_BM2]	
Size A4	Number Y37A19302	Revision 1.0
Date: 9-Nov-2000	Sheet of 9 / 10	
File: D:\DATA\..\BM2DRV.SCH	Drawn By: S.SAKAKI	

FCC ID:OPO199909010003

BVBM2_PWR

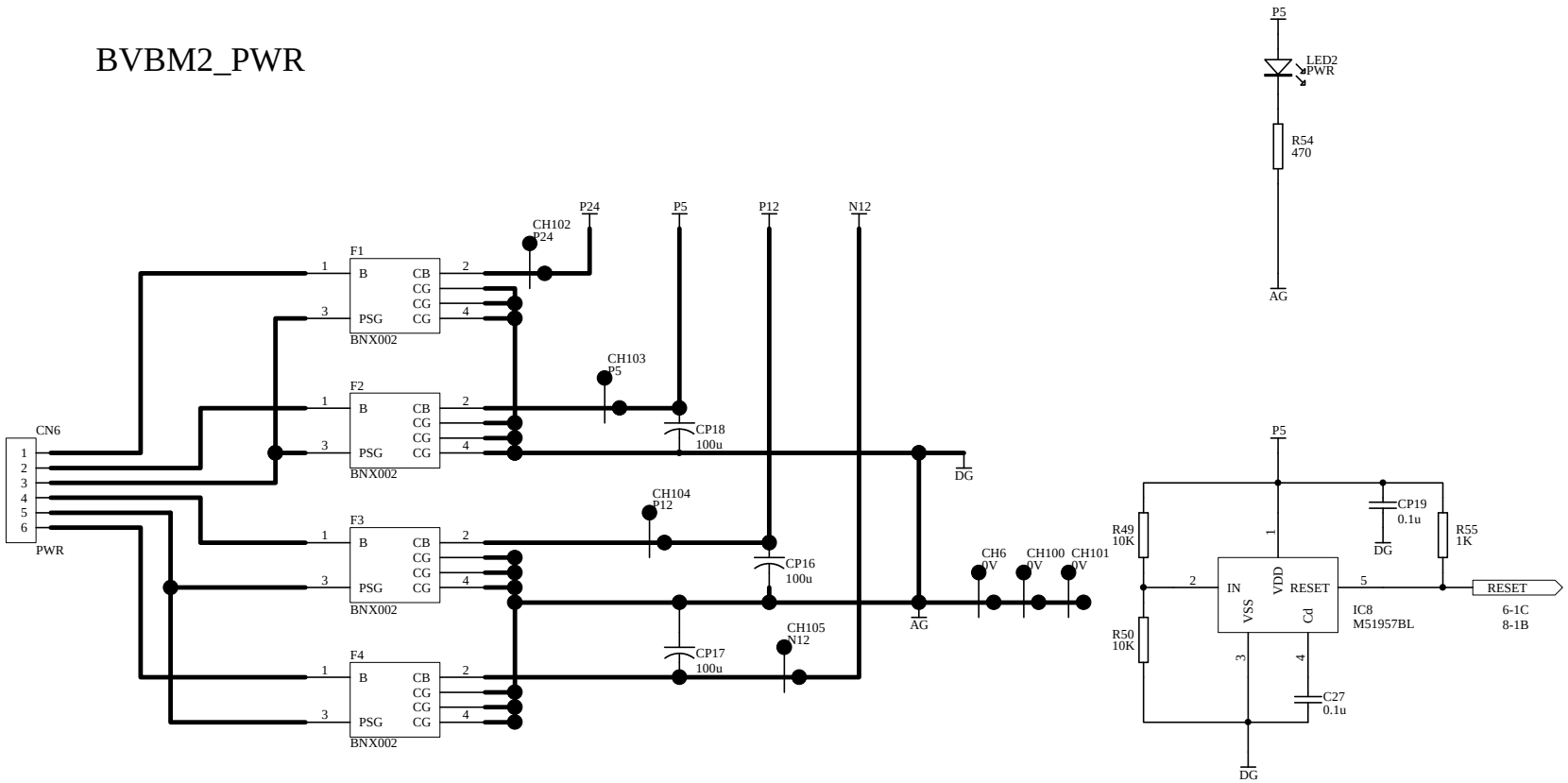

SHINKO ELECTRIC CO.,LTD	1	
	2	
	3	
	4	
Title	Communication Modem Controller (CMC) [BV_BM2]	
Size A4	Number Y37A19302	Revision 1.0
Date: 9-Nov-2000	Sheet of 10 / 10	
File: D:\DATA\..\BM2PWR.SCH	Drawn By: S.SAKAKI	