TEST REPORT

Report No. .....:	**HST201706-4250-FCC**
Sample Description….:	**Wireless Microphone**
Model……:	**TX3010N**
Assessment Category..:	**Entrusted**
Applicant……:	**CAD Audio, LLC**

Guangdong Huesent Testing & Inspection Technology Co., Ltd.

TEST REPORT

Sample Description	Wireless Microphone	Trademark	CAD
Model	TX3010N	Specification	DC3V
Assessment Category	Entrusted	Sample Quantity	1
Applicant:	CAD AUDIO, LLC	Sample Status	Normal
Sample Received Date	Jun. 5, 2017	Test Date	Jun. 5 to Jun. 13, 2017
Issue Date	Jun. 15, 2017		
Manufacturer	CAD Audio, LLC		
Address	6573 Cochran Road, Building I, Solon, Ohio, USA 44139		
Factory	CAD Audio, LLC		
Address	6573 Cochran Road, Building I, Solon, Ohio, USA 44139		
Test address	No.91, Dongguanzhuang Road, Tianhe District, Guangzhou, Guangdong, China		
Test Items	Listed on page 4		
Test standard	FCC Part 74.861e: 2016		
Test Conclusion	The results conform to the requirements of standards with respect to the test items.		
Remarks	FCCID: OQ5TX3010N		
Tested by ： Lemon Fu	Sign： Lemon Fu		
Reviewed by：Sandy Yu	Sign： Sandy Yu		
Approved by：Robin Peng	Sign：		

TABLE OF CONTENT

1 Test Summary 4

2 General Information 8

2.1 Details of E.U.T. 8
2.2 Description of Support Units 8
2.3 Standards Applicable for Testing 8
2.4 Test Location 9
2.5 Deviation from Standards 9
2.6 Abnormalities from Standard Conditions 9

3 Test Results 10

3.1 E.U.T. Operation Condition 10
3.2 Test Procedure & Measurement Data 11
3.2.1 Carrier Radiated Power & Radiated Spurious Emissions 11
3.2.2 Occupied Bandwidth 16
3.2.3 Necessary bandwidth 19
3.2.4 Frequency Stability 22
3.2.5 Modulation Characteristics 24
3.3 Photographs 27
3.3.1 Radiated Emission Test Setup 27
3.4 EUT Constructional Details 29
3.5 Antenna Photo 37

4 Equipments Used during Test 38

1 Test Summary

Test	Test Requirement	Standard Paragraph	Result
Conducted Emissions at Mains Terminals	FCC PART 15.207	In FCC PART 15.207	PASS
Carrier Radiated Power	FCC Part 2.1046	74.861 e) 1) 54–72, 76–88 & 174–216 MHz bands, 50 mW 470–608 and 614–806 MHz bands, 250 mW	PASS
Modulation Deviation	FCC Part 2.1047	74.861 e) 3) Within 75kHz	PASS
Frequency Stability	FCC Part 2.1055	74.861 e) 4) <0.005% 50 ppm	PASS
Operating Bandwidth	FCC Part 2.1049 c)	74.861 e) 5) Within 200kHz	PASS
Unwanted Radiation	FCC Part 2.1049 c)	74.861 e) 6) within the mask	PASS
Necessary bandwidth	ETSI EN 300 422-1	74.861 e) 7) within the mask in ETSI EN 300 422-1	PASS
Radiated Spurious Emission	FCC Part 2.1053	74.861 d) 3) < 43+10lgP(W) dB	PASS

Remark:

♣The EUT has one channel, which is located in the range 520.600 MHz to 541.625 MHz.

Only test result of sample of in channels 520.600 MHz, 521.325 MHz and 541.625 MHz were recorded in this report.

Channel list:

Group 1		Group 2	
Channel	Frequency/ MHz	Channel	Frequency/ MHz
1	521.325	1	524.475
2	522.325	2	525.075
3	523.725	3	526.150
4	525.575	4	528.150
5	526.675	5	530.500
6	533.025	6	533.500
7	534.250	7	535.550
8	536.000	8	536.925
9	537.325	9	537.900
10	538.225	10	539.250

Group 3		Group 4	
Channel	Frequency/ MHz	Channel	Frequency/ MHz
1	521.000	1	521.500
2	521.775	2	523.125
3	523.025	3	524.450
4	523.700	4	527.275
5	532.050	5	528.250
6	534.200	6	528.900
7	534.875	7	536.325
8	536.050	8	537.025
9	536.650	9	538.325
10	538.750	10	539.950

Group 5		Group 6	
Channel	Frequency/ MHz	Channel	Frequency/ MHz
1	520.600	1	520.775
2	521.775	2	522.025
3	522.025	3	524.675
4	522.650	4	527.900
5	523.750	5	529.550
6	529.575	6	531.600
7	530.525	7	532.550
8	531.850	8	536.575
9	532.550	9	537.600
10	533.675	10	539.025

Group 7		Group 8	
Channel	Frequency/ MHz	Channel	Frequency/ MHz
1	521.775	1	520.600
2	523.675	2	523.575
3	525.075	3	524.675
4	526.000	4	527.025
5	527.725	5	528.300
6	532.375	6	531.375
7	534.325	7	534.025
8	535.275	8	535.275
9	537.475	9	537.550
10	539.225	10	538.700

Group 9		Group 10	
Channel	Frequency/ MHz	Channel	Frequency/ MHz
1	522.450	1	522.650
2	523.375	2	524.925
3	524.750	3	527.925
4	527.775	4	529.675
5	529.350	5	532.325
6	532.650	6	533.925
7	533.550	7	536.025
8	538.175	8	537.525
9	540.075	9	540.625
10	540.975	10	541.625

2 General Information

2.1 Details of E.U.T.

Power Supply:	DC3V, by 2*AA batteries
Main Function:	Wireless microphone system with an associated receiver for transmitting voice.
Oscillating Frequency:	10MHz@X301, 32.768kHz@X201.
Port:	/

The final amplifier Collector Voltage and Collector Current are 200mV & 3.5mA respectively.

Necessary Bandwidth: 2M+2DK= 2 x 15 kHz + 2 x 19kHz x 1.0 = 68 kHz

10 channel for each group, 10 groups

Antenna Number & Type: One & Fixed on PCB; Gained: 2.15 dBi; Impedance: 50-Ohm; Antenna length: strip: 110 mm.

Antenna min distance to the shell: 1 mm

Frequency Response: 50Hz – 15kHz with a low pass filter circuit of 19kHz

2.2 Description of Support Units

Connect the EUT to mains power, and then test the EUT with signal generator.

2.3 Standards Applicable for Testing

The standard used was FCC Part 74.861e: 2016

The EUT belongs to licensed low power auxiliary devices.

2.4 Test Location

I-Test Laboratory

F/1-2, South Block, A2 building, No.3 Ke Yan Lu Guangzhou Science City, Guangzhou, China

Tel: 00862032209330 Email: lbz@i-testlab.com

CNAS(Lab code:L4957) FCC (Registration No.:935596) IC (Registration NO.:8368A)

2.5 Deviation from Standards

None.

2.6 Abnormalities from Standard Conditions

None.

3 Test Results

3.1 E.U.T. Operation Condition

Operating Environment:

Temperature:	20.0 °C~25 °C
Humidity:	50 ~70% RH
Atmospheric Pressure:	980~1012 mbar
EUT Operation:	Test the EUT in transmitting mode.
	Performed Carrier Radiated Power & Radiated Spurious Emissions testing in highest/ middle / lowest frequency spots within the range, and performed Occupied Bandwidth, Frequency Stability & Modulation Characteristics in middle frequency spot.

3.2 Test Procedure & Measurement Data

3.2.1 Carrier Radiated Power & Radiated Spurious Emissions

Test Requirement: FCC CFR 47 Part 74.861 e) 1) & d) 3)

Test Method: EIA/TIA 603-D:2010 section 2.2,
FCC CFR 47 Part 2.1047 & 1053

Measurement Distance: 3m (Semi-Anechoic Chamber)

Test Requirement:

(d) For low power auxiliary stations operating in the bands other than those allocated for TV broadcasting, the following technical requirements are imposed.

(3) The occupied bandwidth shall not be greater than that necessary for satisfactory transmission and, in any event, an emission appearing on any discrete frequency outside the authorized band shall be attenuated, at least, 43+10 log ^{10} (mean output power, in watts) dB below the mean output power of the transmitting unit.

(e) For low power auxiliary stations operating in the bands allocated for TV broadcasting, the following technical requirements apply:

(1) The power of the measured unmodulated carrier power at the output of the transmitter power amplifier (antenna input power) may not exceed the following:

(i) 54–72, 76–88, and 174–216 MHz bands—50 mW

(ii) 470–608 and 614–806 MHz bands—250 mW

Test Procedure:

The procedure used was EIA/TIA 603-D:2010. The receiver was scanned from the lowest radio frequency generated in the equipment to the tenth harmonic of the carrier. When an emission was found, the table was rotated to produce the maximum signal strength. An initial pre-scan was performed for in peak detection mode using the receiver. The EUT was measured for both the Horizontal and Vertical polarities and performed a pre-test three orthogonal planes.

The field strength is calculated by adding the Antenna Factor, Cable Factor & Preamplifier. The basic equation with a sample calculation is as follows:

Final Test Level =Receiver Reading +Antenna Factor +Cable Factor –Preamplifier Factor

An initial pre-scan was performed in the 3m chamber using the spectrum analyzer in peak detection mode. Quasi-peak measurements were conducted based on the peak sweep graph. The EUT was measured by Bilog antenna with 2 orthogonal polarities

Remove the EUT and replace it with substitution antenna. A signal generator was connected to the substitution antenna by a non-radiating cable. The absolute levels of the Carrier Radiated Power and spurious emissions were measured by the substitution.

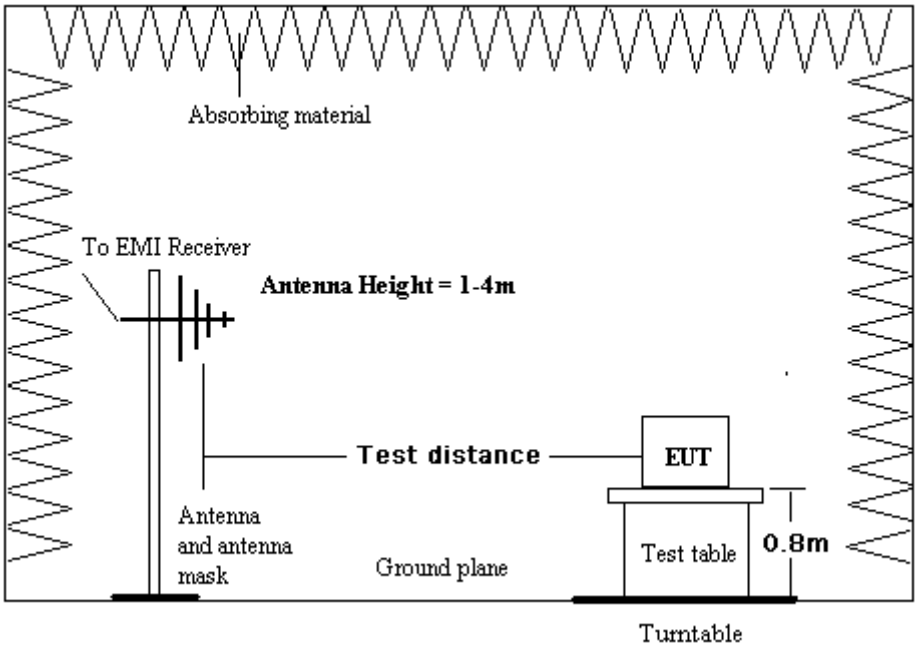

Conducted output power:

Remove the antenna from the EUT and then connect a low attenuation RF cable

from the antenna port to the spectrum.

Set the spectrum analyzer: RBW = 300 kHz. VBW >= RBW. Span=2MHz, Sweep = auto; Detector Function = Peak (Max. hold).

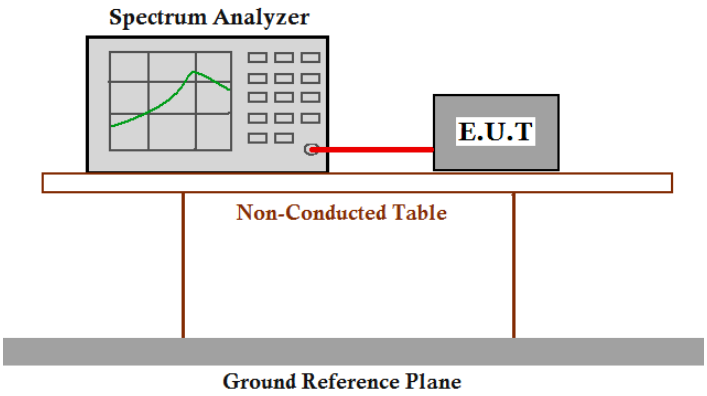

Carrier Frequency (MHz)	**Reading Value conducted output power dBm**	**Cable loss (dB)**	**True Value conducted output power dBm (mW)**	**Limit in** 74.861 e) 1)
520.600	0.9dBm	0.5	1.4dBm(i.e.1.38 mW)	24 dBm (i.e. 250 mW)
521.325	0.9dBm	0.5	1.4dBm(i.e.1.38 mW)	
541.625	0.8dBm	0.5	1.3dBm(i.e 1.35 mW)	

Note:

Conducted output power (dBm)= Reading Value (dBm)+ Cable loss(dB)

Radiated spurious emissions:

520.600 MHz, Horizontal							
Spurious Emission Frequency (MHz)	Read value (dBm)	Cable Loss (dB)	Antenna Factor (dB)	1-18GHz Pre-amplifier (dB)	Ture value (dBm)	Limit/ dBm	Margin(dB)
Fundamental: 520.6	-18.2	2.8	19.3	0	3.9	24	-20.1
531.2	-55.8	2.9	19.5	0	-33.4	-13	-20.4
1731.0	-46.9	5.4	26.2	30	-45.3	-13	-32.3
2603.0	-35.6	6.8	28.3	30	-30.5	-13	-17.5
520.600 MHz, Vertical							
Fundamental: 520.6	-19.0	2.8	19.3	0	3.1	24	-20.9
1884.0	-44.1	5.7	27.3	30	-41.1	-13	-28.1
521.325, Horizontal							
Fundamental: 521.3	-17.9	2.8	19.3	0	4.2	24	-19.8
532.5	-55.9	2.9	19.5	0	-33.5	-13	-20.5
1731.0	-48.2	5.4	26.2	30	-46.6	-13	-33.6
2598.0	-35.2	6.8	28.3	30	-30.1	-13	-17.1
521.325, Vertical							
Fundamental: 521.3	-18.8	2.8	19.3	0	3.3	24	-20.7
1884.0	-43.9	5.7	27.3	30	-40.9	-13	-27.9

541.625 MHz, Horizontal							
Fundamental: 541.6	-18.2	2.8	19.4	0	4.0	24	-20.0
531.2	-55.5	2.9	19.5	0	-33.1	-13	-20.1
1731.0	-47.9	5.4	26.2	30	-46.3	-13	-33.3
2708.1	-35.3	6.8	28.3	30	-30.2	-13	-17.2
541.625 MHz, Vertical							
Fundamental: 541.6	-18.8	2.8	19.4	0	3.4	24	-20.6
1884.0	-44.2	5.7	27.3	30	-41.2	-13	-28.2

Note:

The Factual Level is ERP value.

Limit = -13 dBm, and the Fundamental limit = 24 dBm (i.e. 250 mW)

30dB pre-amplifier factor is used for the radiated emissions test above 1GHz.

Attenuation Factor includes the cable loss and the antenna factor, 30dB pre-amplifier factor.
Below 1GHz: Attenuation Factor (dB)= cable loss (dB)+ antenna factor(dB)
Above 1GHz: Attenuation Factor (dB)= cable loss (dB)+ antenna factor(dB) – 30 (dB)
Ture Value (dBm) = Reading Value (dBm)+ Attenuation Factor (dB)

The peak emission of other frequency in rang from 30MHz up to 10 times carrier were 25dB lower than the limit, hence no data was recorded in the report.

NA: Not applicable, since the level is over 30dB lower than the limit.

Below 1GHz, Detector=Peak, RBW=120kHz, VBW=60kHz, MT=1ms, Unit=dBm.
Above 1GHz, Detector=Peak, RBW=1MHz, VBW=500kHz, MT=1ms, Unit=dBm.

TEST RESULTS: The unit does meet the FCC requirements.

3.2.2 Occupied Bandwidth

Test Requirement: FCC CFR 47 Part 74.e) 5) & 6)

Test Method: FCC CFR 47 Part 2.1049 f) 2)

Requirements:

(e) For low power auxiliary stations operating in the bands allocated for TV broadcasting, the following technical requirements apply:

(5) The operating bandwidth shall not exceed 200 kHz.

(6) The mean power of emissions shall be attenuated below the mean output power of the transmitter in accordance with the following schedule:

(i) On any frequency removed from the operating frequency by more than 50 percent up to and including 100 percent of the authorized bandwidth: at least 25dB;

(ii) On any frequency removed from the operating frequency by more than 100 percent up to and including 250 percent of the authorized bandwidth: at least 35dB;

(iii) On any frequency removed from the operating frequency by more than 250 percent of the authorized bandwidth: at least $43+10\log_{10}$ (mean output power in watts) dB.

Test Procedure

Setup

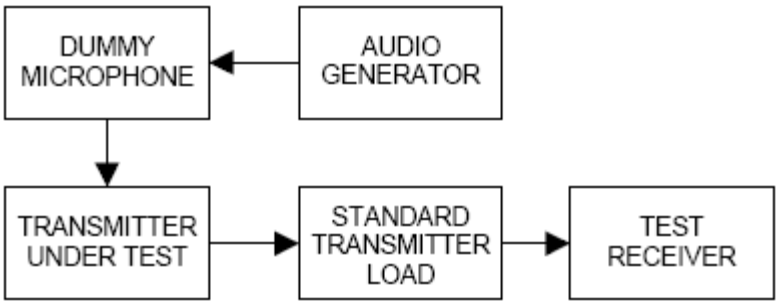

Input 2500Hz signal to the microphone, find the 50% rated deviation, add the level 16dB, test this status the 99% occupied bandwidth and record it.

Test Result: The graph as below, represents the emissions take for this device.

Occupied Bandwidth (99% of total power): 70.0 kHz.

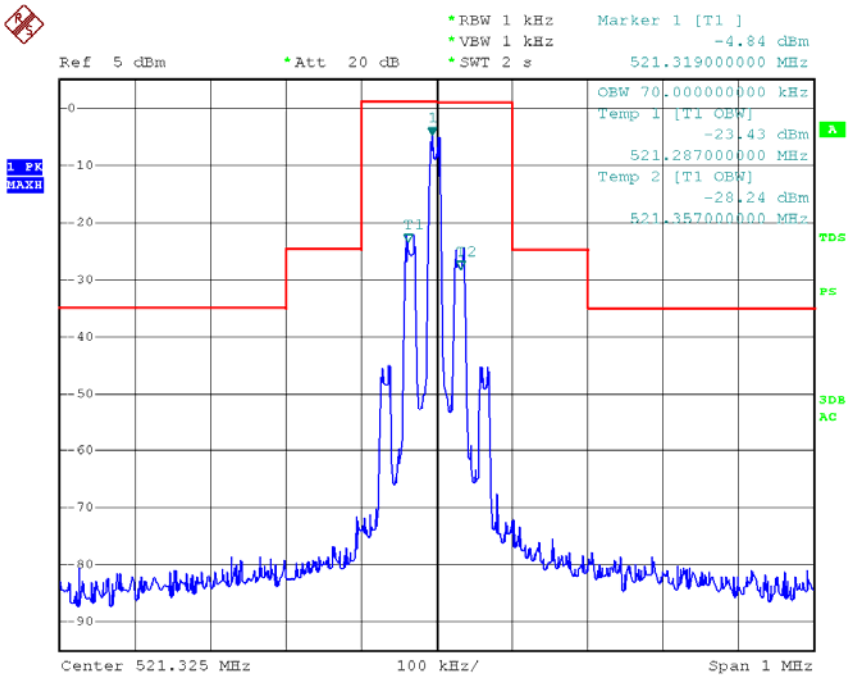

Date: 10.JUN.2017 12:53:00

Emission Mask: input with 2500 Hz AF, 50% modulation + 16dB.

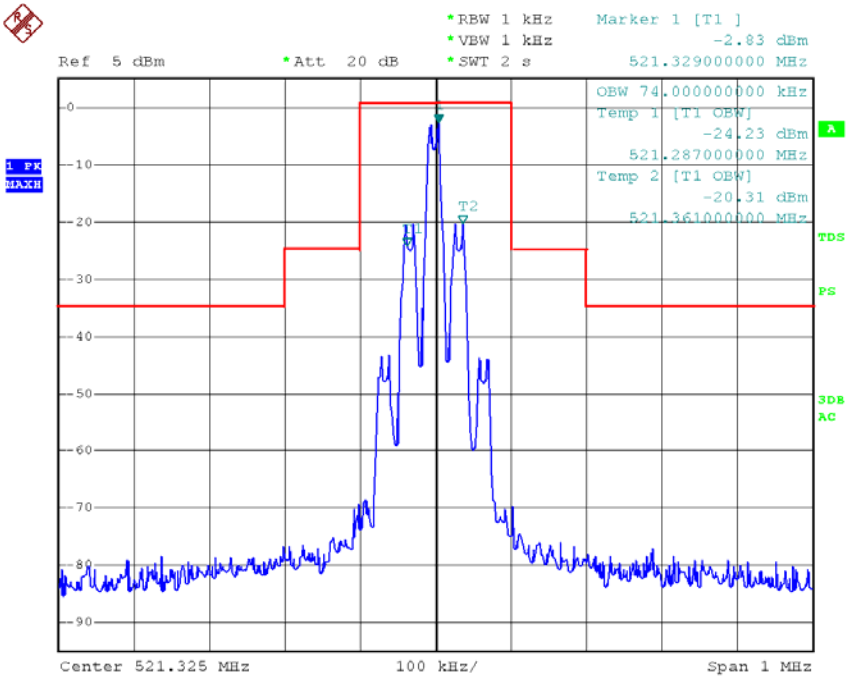

Date: 10.JUN.2017 12:52:06

Emission Mask: input with 10 kHz AF, 50% modulation + 16dB.

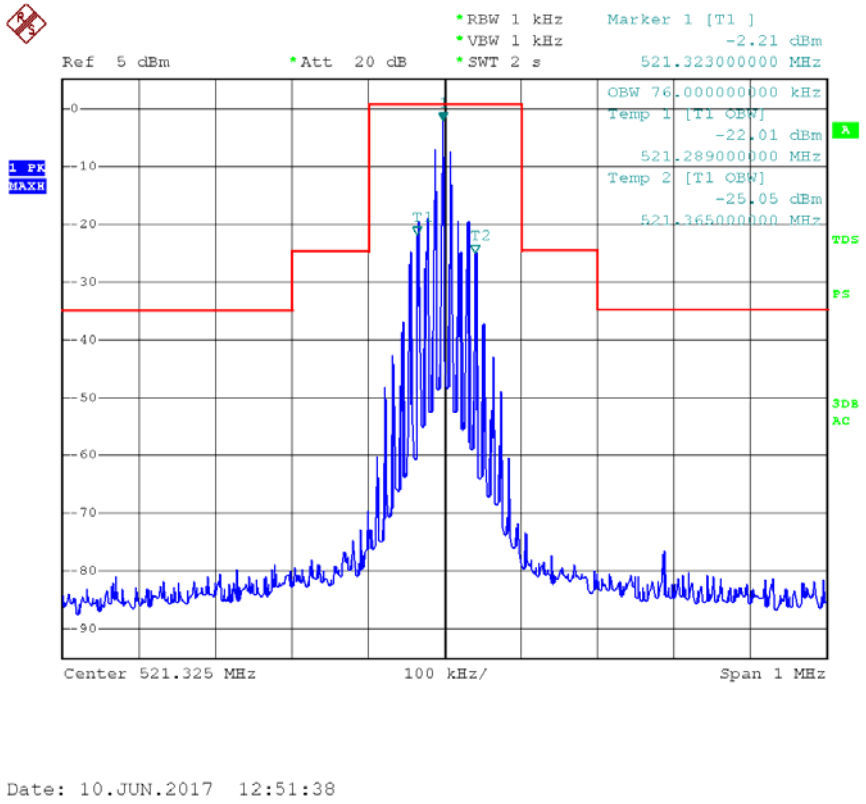

Emission Mask: input with 15 kHz AF, 50% modulation + 16dB.

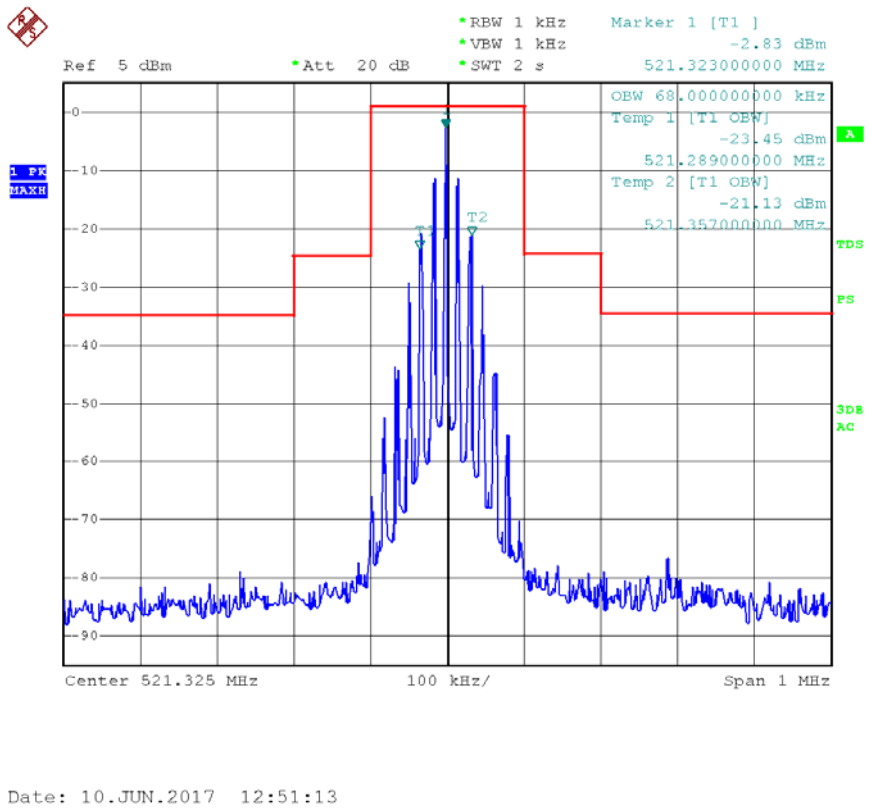

Test results: The unit does meet the FCC requirements.

3.2.3 Necessary bandwidth

Test Setup: As ETSI EN 300 422-1 V1.5.1 Annex B

Test Setup:

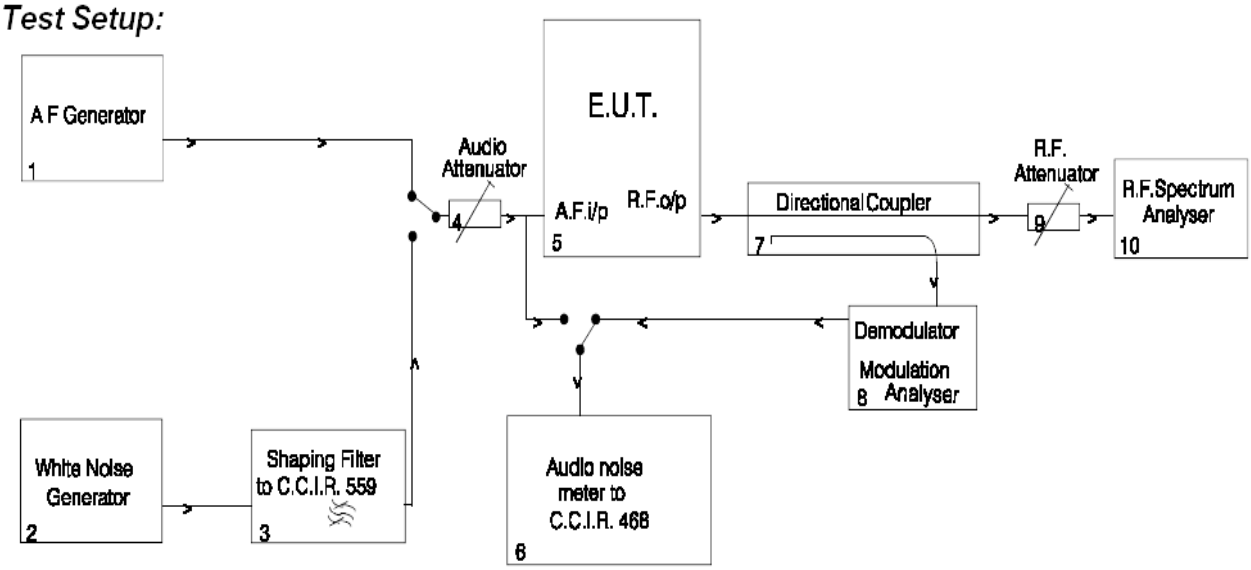

Minimum requirement: ETSI EN 300 422-1 V1.5.1 Subclass 8.3.1.2 Limits:
The transmitter output spectrum shall be within the mask defined in figure 3 where B is the declared channel bandwidth 200kHz.

Test Procedure: ETSI EN 300 422-1 V 1.5.1 Subclass 8.3.1.1 The audio input limiting threshold is 5 mV.

Test Results

The channel bandwidth has been tested to be 200 KHz

Centre carrier frequency measured to be 521.325 MHz Uncertainty: 4.2%

Frq. Spot	Measured Amplitude (dBc)	Freq Limit (MHz)	Amplitude (relative to unmodulated carrier)	Pass /Fail
Fc - 0.35B	< -30 dBc	521.25500	-20dB	PASS
Fc + 0.35B	< -30 dBc	521.39500	-20dB	PASS
Fc - 0.5B	-77.5dBc	521.22500	-60dB	PASS
Fc + 0.5B	-76.2dBc	521.42500	-60dB	PASS
Fc - B	-82.2dBc	521.12500	-80dB	PASS
Fc + B	-81.1dBc	521.52500	-80dB	PASS
Fc - 1MHz	-90.5dBc	520.32500	-90dB*	PASS
Fc + 1MHz	-90.3dBc	522.32500	-90dB*	PASS

*: The average detector can be used in the frequency spot.

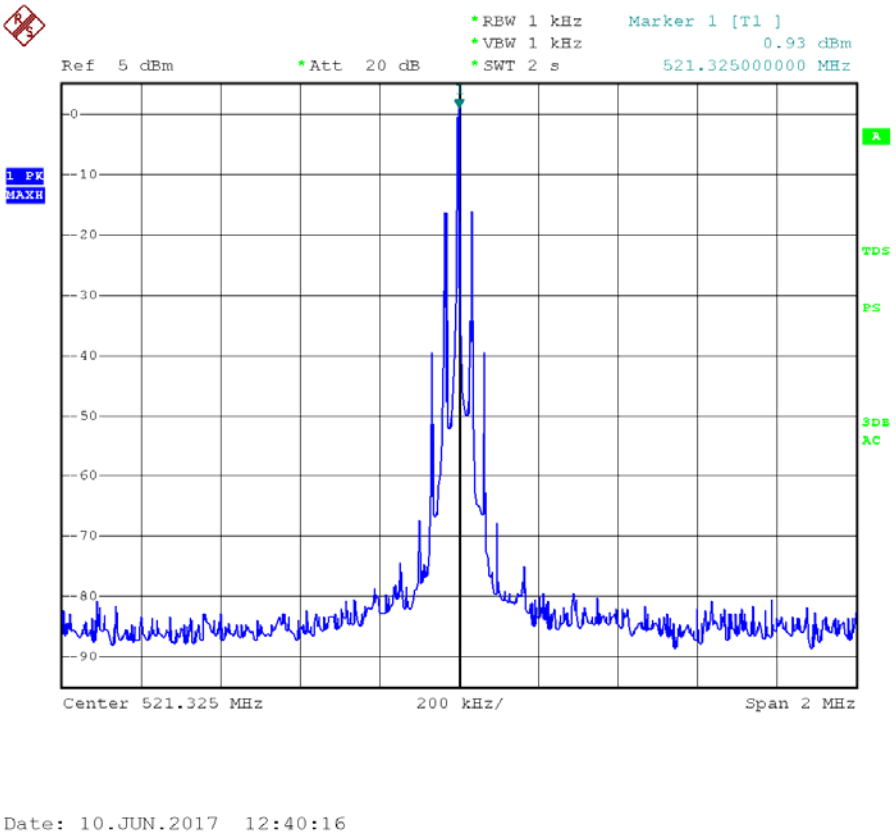

The carrier without modulation

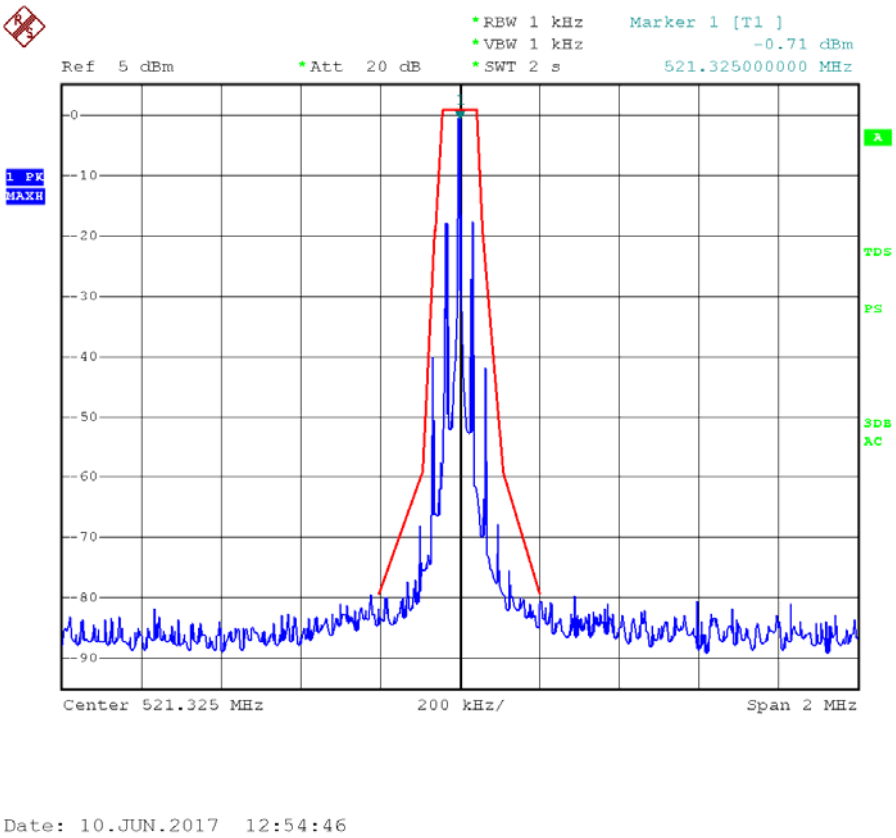

The Peak figure with modulation

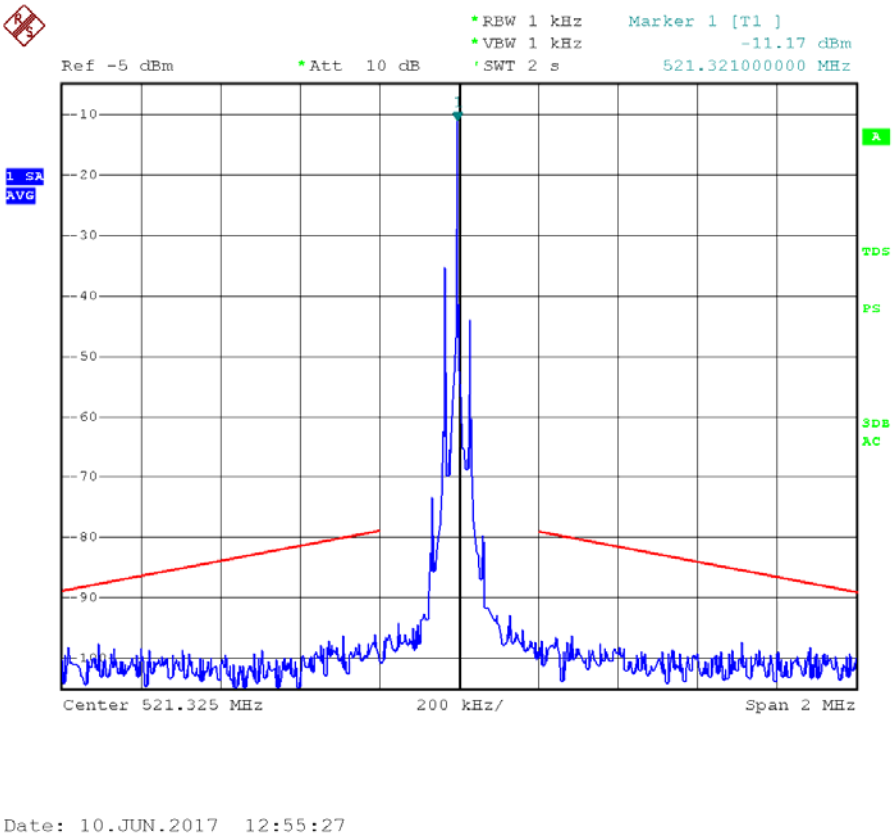

The Average figure with modulation

3.2.4 Frequency Stability

Test Requirement: FCC CFR 47 Part 74.e) 4)

Test Method: FCC CFR 47 Part 2.1055

Requirements: +/-50 ppm

(e) For low power auxiliary stations operating in the bands allocated for TV broadcasting, the following technical requirements apply:

(4) The frequency tolerance of the transmitter shall be 0.005 percent.

Test Procedure:

Frequency stability versus Environmental Temperature

The equipment under test was connected to an external DC power supply and the RF output was connected to a frequency counter via feed through attenuators. The EUT was placed inside the temperature chamber. After the temperature stabilized for approximately 20 minutes, the frequency of the output signal was recorded from the counter.

Frequency Stability versus Input Voltage

At room temperature (25 ± 5°C), an external variable DC power supply was connected to the EUT. The frequency of the transmitter was measured for 115%, 100% and 85% of the nominal operating input voltage. For hand carried, battery powered equipment, reduce primary supply voltage to the battery operating end point which shall be specified by the manufacturer.

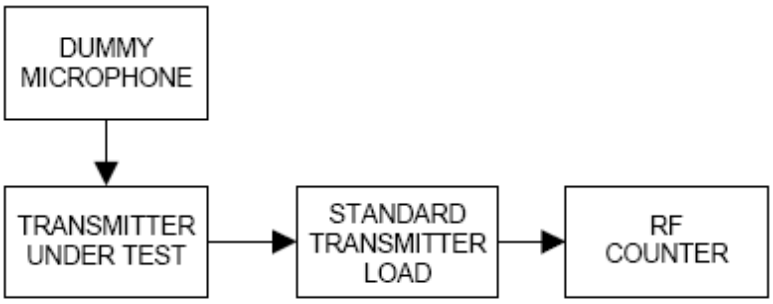

Test Result:

Assigned Frequency: 520.6 MHz/ 521.325 MHz/ 541.625 MHz				
Environment Temperature (°C)	Power Supplied (Vdc)	Frequency Measure with Time Elapsed Total emission within (kHz)		
		+/-26.03	+/-26.66	+/-27.81
50	3.0	-9.4	-9.6	-8.8
40	3.0	10.3	11.1	10.4
30	3.0	12.1	11.3	10.3
20	3.0	-7.2	-8.9	-9.1
10	3.0	-10.4	-7.7	-8.1
0	3.0	13.5	14.2	12.4
-10	3.0	-10.4	-10.2	-15.6
-20	3.0	-15.7	-15.5	-16.1
-30	3.0	-17.4	-17.3	-16.3
Environment Temperature (°C)	Power Supplied	Frequency Measure with Time Elapsed Total emission within (kHz)		
	(Vdc)	+/-26.03	+/-26.66	+/-27.81
25	3.0	-11.3	-10.4	-14.5
25	2.8	1.3	1.6	2.7
25	2.6	4.8	3.1	10.3
25	2.4	-11.5	-14.3	-13.5

The EUT end working at 2.4Vdc.

The results: The unit does meet the FCC requirements.

3.2.5 Modulation Characteristics

Test Requirement: FCC CFR 47 Part 74.e) 3)

Test Method: FCC CFR 47 Part 2.1047

Requirements:

(e) For low power auxiliary stations operating in the bands allocated for TV broadcasting, the following technical requirements apply:

(3) Any form of modulation may be used. A maximum deviation of ±75 kHz is permitted when frequency modulation is employed.

Test Procedure:

Audio Frequency Response

The RF output of the transceiver was connected to the input of FSP 30 with FM deviation module through sufficient attenuation so as not to overload the meter or distort the reading. An audio signal generator was connected to the audio input of microphone.

The audio signal input level was adjusted to obtain **20% of the maximum rated system deviation at 1 kHz**, and recorded as DEV_{REF}. With the audio signal generator level unchanged, set the generator frequency between 100 to 5000 Hz. The transmitter deviations (DEV_{FREQ}) were measured and the audio frequency response was calculated as 20log10 [DEV_{FREQ} / DEV_{REF}]

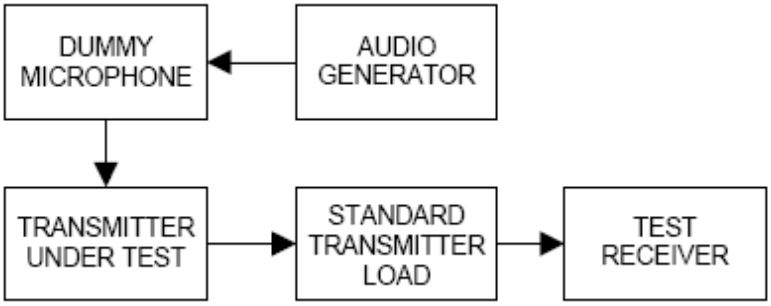

The plot(s) of Audio Frequency Response is presented hereinafter as reference.

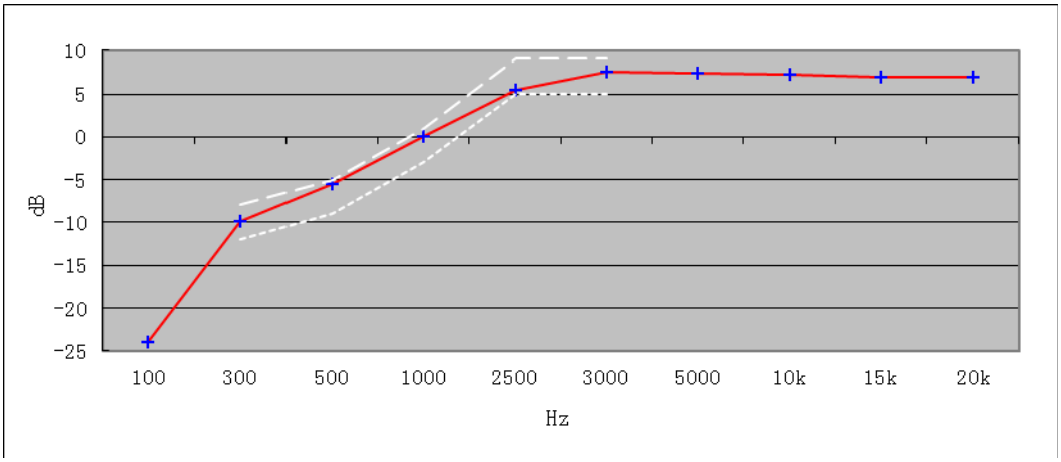

0dB=10mV at 1kHz (20% of the maximum rated system deviation).

Modulation Limiting

a) Adjust the transmitter per the manufacturer's procedure for full rated system deviation.

b) Set the test receiver to measure peak positive deviation. Set the audio bandwidth for ≤0.25 Hz to ≥15,000 Hz. Turn the de-emphasis function off.

c) Apply a **1000 Hz** modulating signal to the transmitter from the audio frequency generator, and adjust the level to obtain **60% of full rated system deviation**.

d) Increase the level from the audio frequency generator by 20 dB in one step (rise time between the 10% and 90% points shall be 0.1 second maximum).

e) Measure both the instantaneous and steady-state deviation at and after the time of increasing the audio input level.

f) With the level from the audio frequency generator held constant at the level obtained in step e), slowly vary the audio frequency from 100 to 5000 Hz and observe the steady-state deviation. Record the maximum deviation.

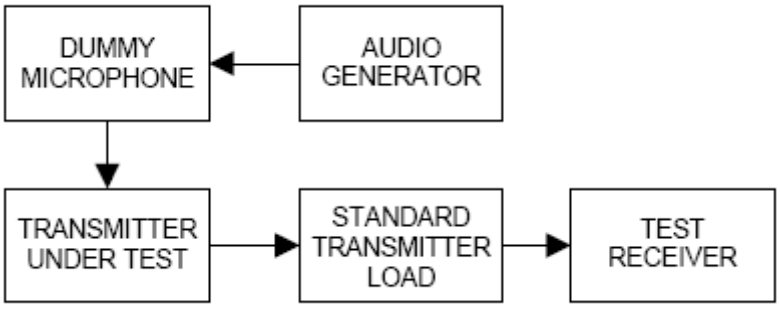

Test at five different modulating frequencies (100Hz ,300Hz, 500Hz, 1KHz, 2.5kHz, 5kHz), the output level of the audio generator was varied up to 1V and the FM deviation level was recorded.

Positive peak deviation

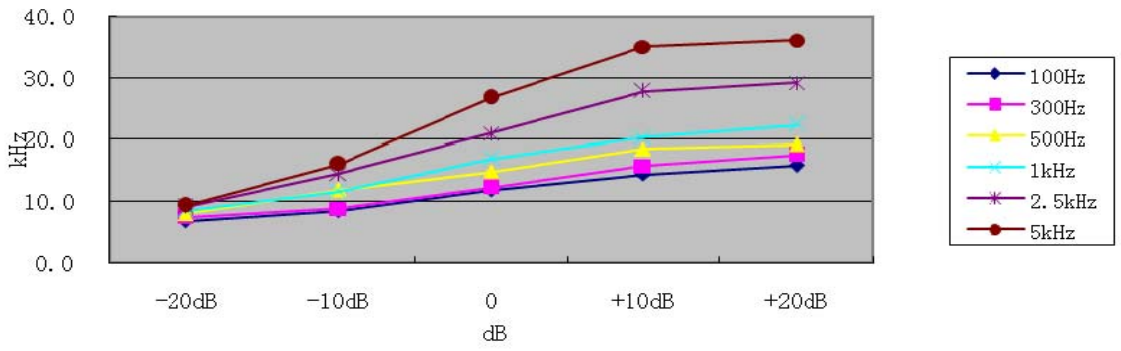

3.3 Photographs

3.3.1 Radiated Emission Test Setup

30MHz - 1GHz

Above 1GHz

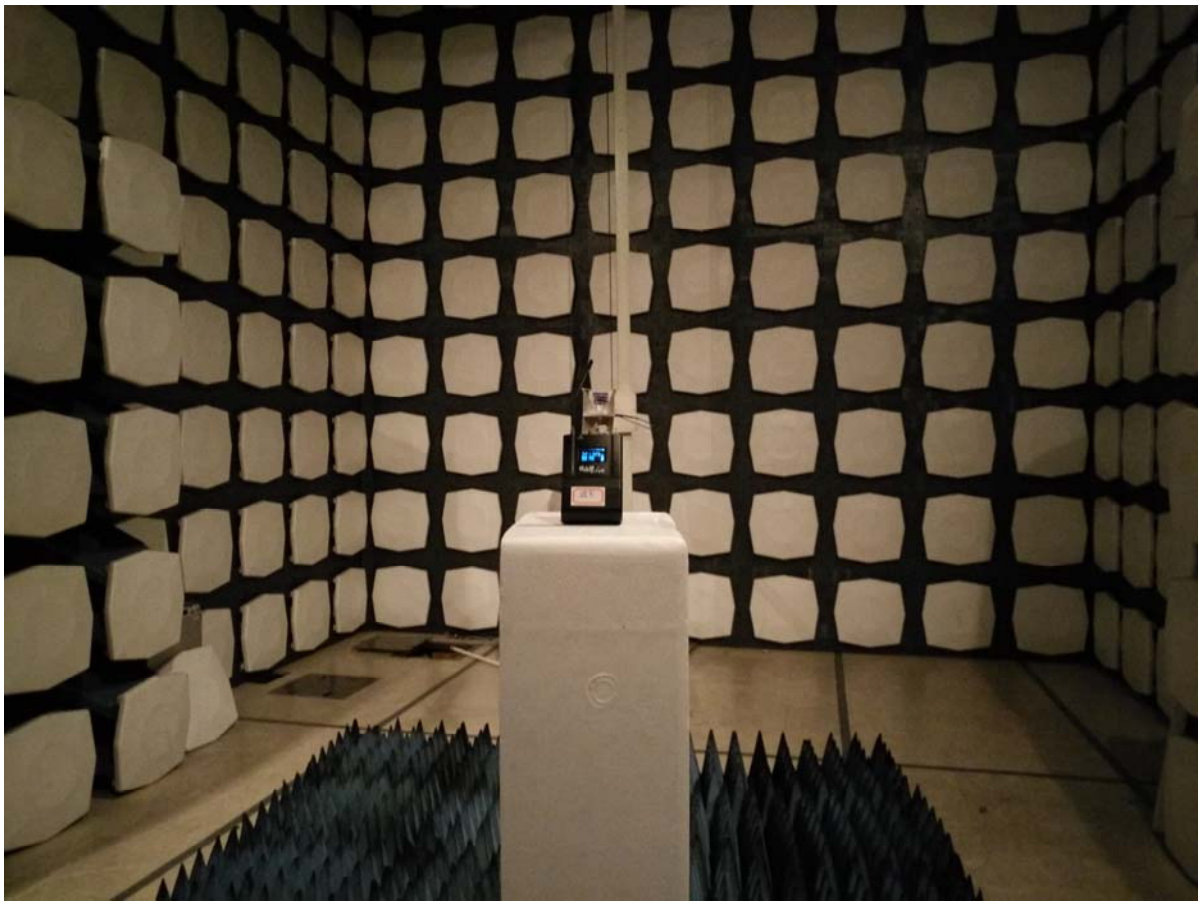

3.4 **EUT Constructional Details**

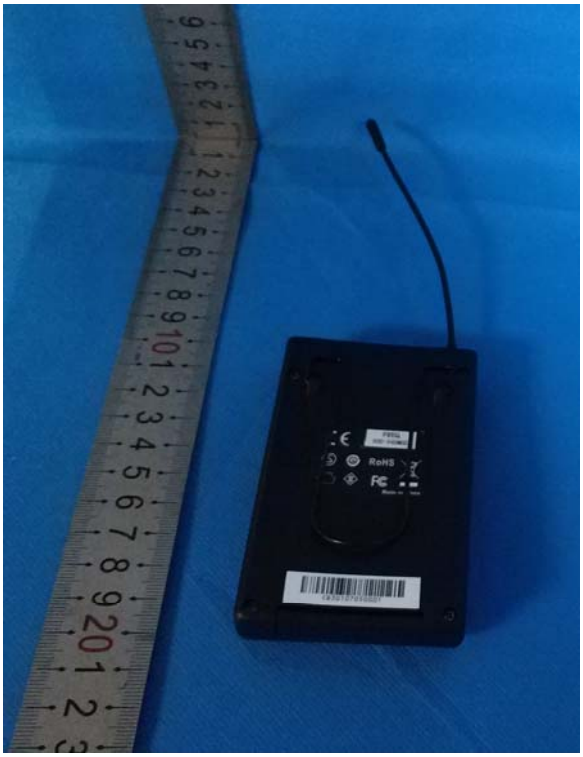

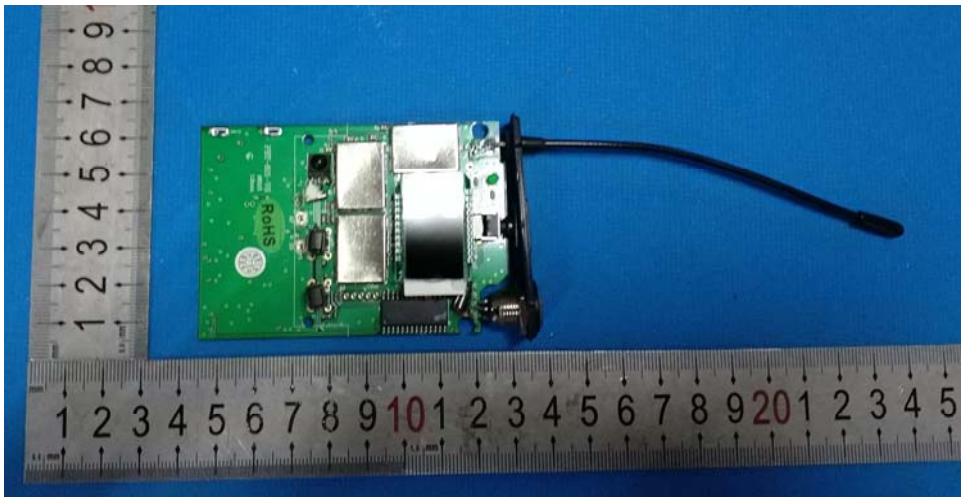
RoHS

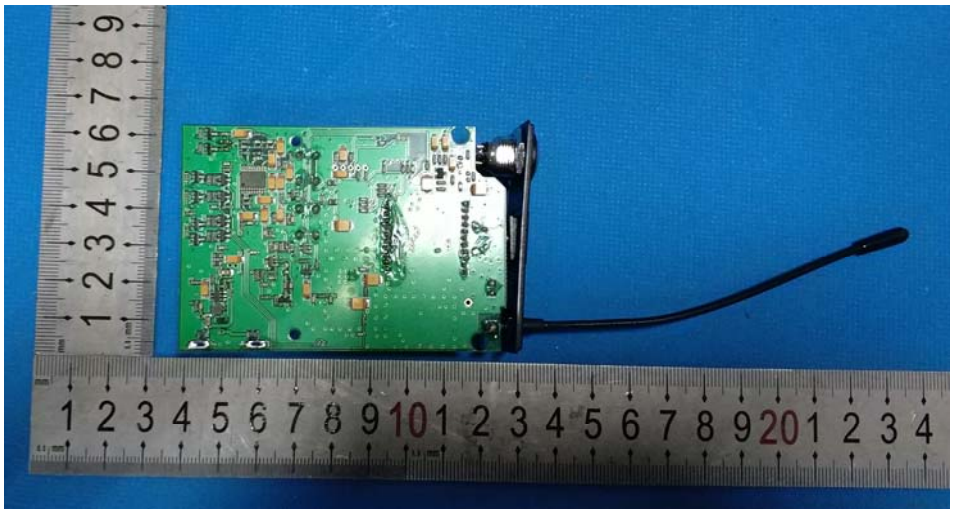

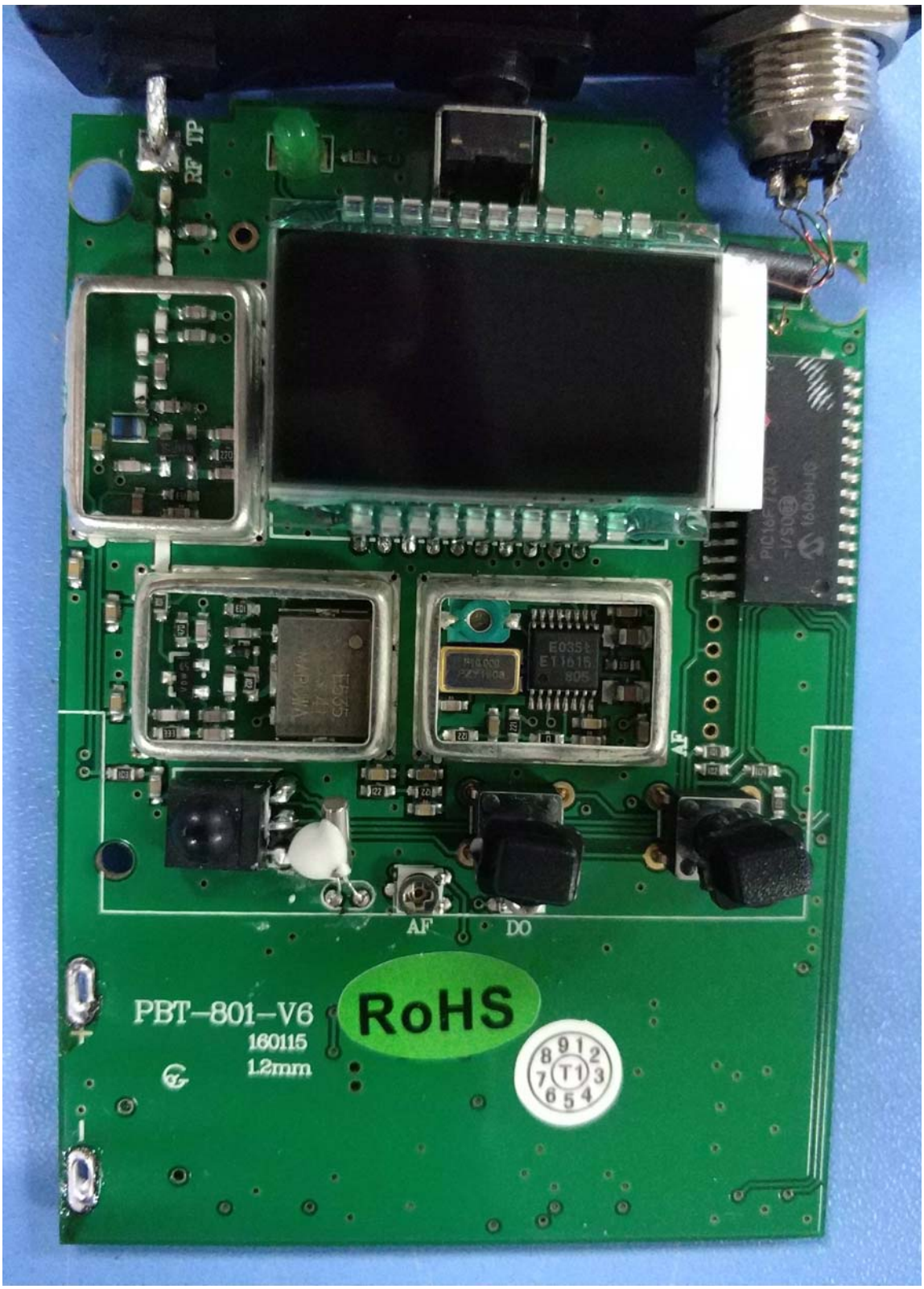
RF TP
AF
AF
DO
PBT-801-V6
160115
1.2mm
RoHS

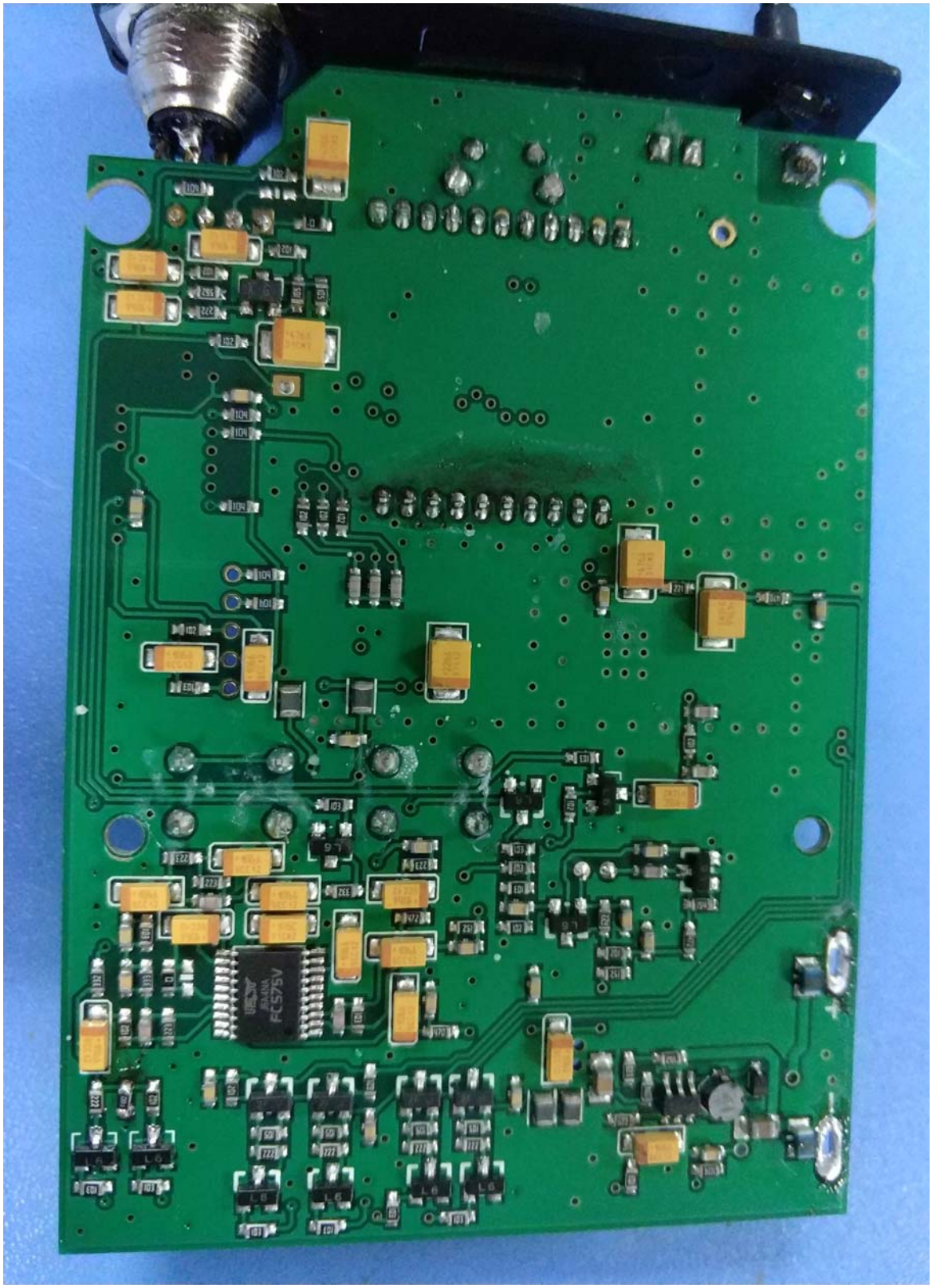
FC575V

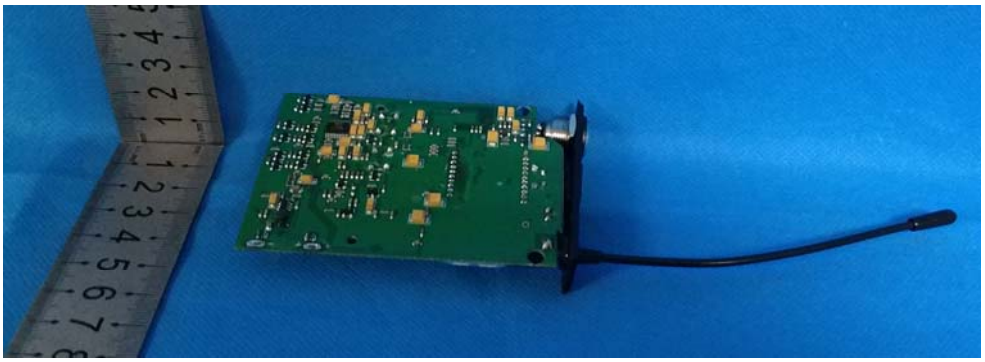

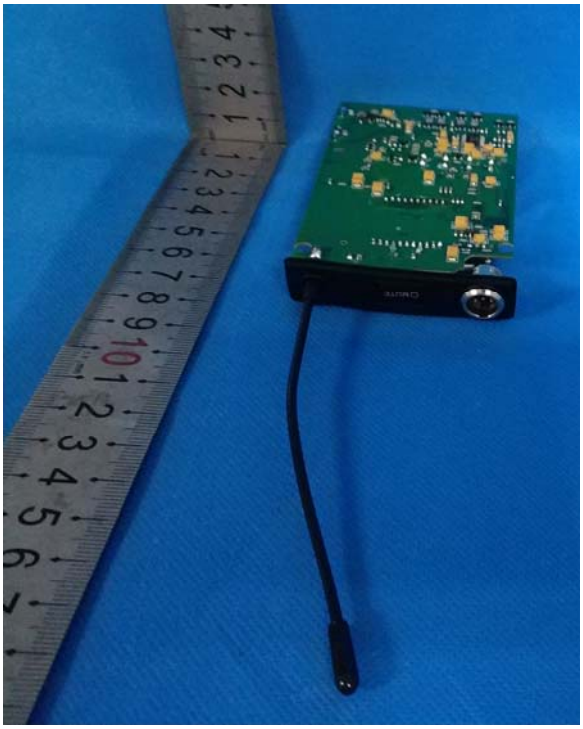

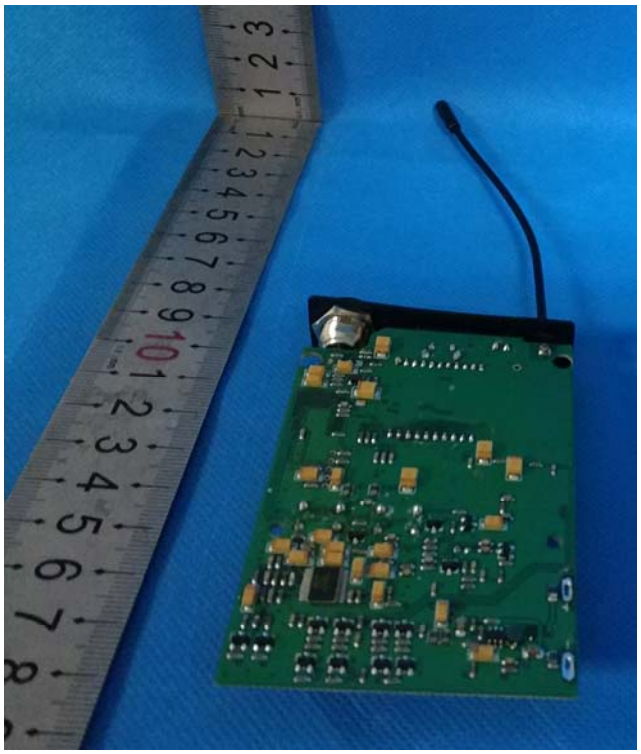

3.5 **Antenna Photo**

Antenna Number & Type: One & Fixed on PCB; Gained: 2.15 dBi; Impedance: 50-Ohm; Antenna length: strip: 110 mm. Antenna min distance to the shell: 1 mm

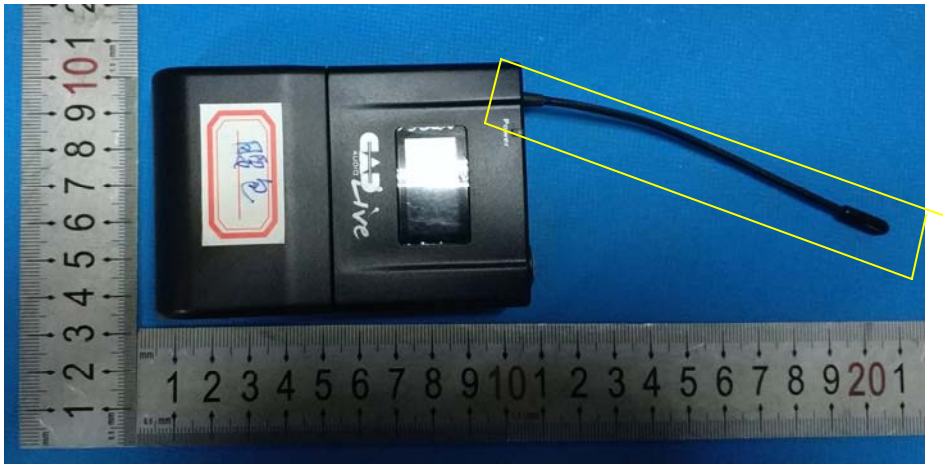

Note:

The EUT was used permanently attached antenna, and it's complied with the requirements of section 15.203: antenna requirement.

4 Equipments Used during Test

Item	Test Equipment	Manufacturer	Model No.	Inventory No.	Cal. Date	Cal. Due date
1	RF Generator	Rohde & Schwarz	SMB100A-B106	1.031	2017-5-10	2018-5-10
2	Spectrum Analyzer	Rohde & Schwarz	FSP30	EMC0001	2017-3-24	2018-3-24
3	EMI Test Receiver	Rohde & Schwarz	ESCI	EMC1002	2017-3-24	2018-3-24
4	2-Channel Power Meter	Rohde & Schwarz	NRP2	1.033	2017-5-10	2018-5-10
5	Audio Analyzer	Hewlett Packard	8903B	EMC0011	2016-11-5	2017-11-5
6	Power Sensor	Rohde & Schwarz	NRP-Z91	1.034	2017-5-10	2018-5-10
7	Power Sensor	Rohde & Schwarz	NRP-Z91	1.035	2017-5-10	2018-5-10
8	Temperature Chamber	Gongwen	GDS-250	SFT0009	2016-11-5	2017-11-5
9	D.C. Power Supply	KIKUSUI	PAN35-10A	SFT0319	2016-11-5	2017-11-5
10	Temperature Chamber	Gongwen	GDS-250	SFT0009	2016-11-5	2017-11-5
11	D.C. Power Supply	KIKUSUI	PAN35-10A	SFT0319	2016-11-5	2017-11-5
12	Humidity/ Temperature Meter	Anymetre	TH101B	SFT0063	2016-11-5	2017-11-5
13	Barometer	ChangChun	DYM3	SEL0088	2016-6-8	2017-6-8
					2017-6-8	2018-6-8
14	Multimeter	UNI-T	UT70A	EMC0017	2016-11-5	2017-11-5
15	Monopole Antenna	HST	N/A	EMC0089	2016-11-5	2017-11-5
16	Low loss coaxial cable	HST	2 m	EMC1008	2016-11-5	2017-11-5
17	Monopole Antenna	HST	N/A	N/A	2016-11-5	2017-11-5
18	Noise Generaror	Ningbo Zhongce	DF1681	EMC0009	2016-11-5	2017-11-5
19	Semi-Anechoic chamber	ETS•Lindgren	FACT3 2.0	ITL-100	2016-6-17	2017-6-17
20	EMI Test receiver	R&S	ESVS10	ITL-111	2017-1-19	2018-1-19
21	EXA Spectrum Analyzer	Agilent Technologies	N9010A	ITL-114	2017-1-19	2018-1-19

22	Biconilog Antenna	ETS•Lindgren	3142D	ITL-105	2015-1-24	2018-1-24
23	Pre Amplifier	HP	8447F	ITL-116	2017-1-19	2018-1-19
24	Wideband Amplifier Super Ultra	Mini-circuits	ZVA-183-S+	ITL-117	2017-1-19	2018-1-19
25	Horn Antenna	A-INFOMW	JXTXLB-10180-N	ITL-110	2015-1-24	2018-1-24
26	Software	Audix	E3	ITL-109	/	/
27	Loop Antenna	BJ 2nd Factory	ZN30900A	EMC6001	2016-7-29	2019-7-29

End of report

Report Statement

1.This test report is invalid if altered, additions and deletions.
2.This test report is responsible for tested samples only .
3.Objections to the test report must be submitted to Guangdong Huesent Testing & Inspection Technology Co., Ltd. within 15 days.
4.The test report is invalid without the signatures of tester, reviewer ,approver ,and official stamp of test unit.
5.Without permission of Guangdong Huesent Testing & Inspection Technology Co., Ltd., This report is not permitted to be duplicated in extracts.
6.P”= Pass=Test item conform to the requirement
“F”= Fail=Test item not conform to the requirement
“N”= Not Applicable =Test item Not Applicable to the test object