Original instructions

# Instruction Manual for the use and the maintenance of the Radio Remote Control

# DYNAMIC PLUS SERIES

## Part D: CRD Receiving Unit

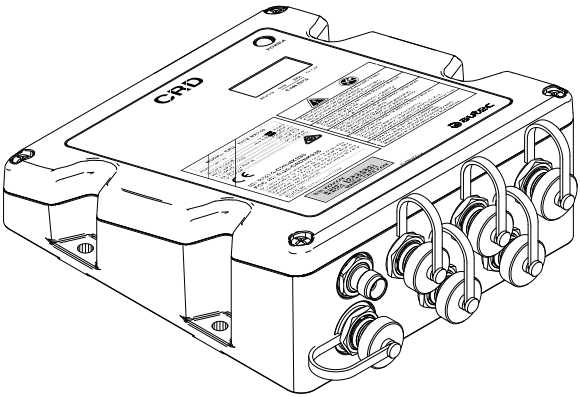


AUTEC SRL
Via Pomaroli, 65
36030 Caldogno (VI), ITALY
Phone: +39 0444 901000
Fax: +39 0444 901011
Email: info@autecsafety.com
www.autecsafety.com

LIUCRD000_eng-00

# WARNING

**THIS PART OF THE MANUAL CONSISTS OF: Part D - Information, instructions and warnings for the CRD Receiving Unit. The Manual consists of Part A – General, Part B – Conformity and Frequencies, Part C – Transmitting Unit, Part D – Receiving Unit and Part E – Battery and Battery Charger, plus the Technical Data Sheet.**

**THIS MANUAL, INCLUDING ALL PARTS OF THIS MANUAL, AND ALL INSTRUCTIONS CONTAINED HEREIN, MUST BE READ CAREFULLY AND UNDERSTOOD BEFORE INSTALLING, USING, MAINTAINING OR REPAIRING THE AUTEC RADIO REMOTE CONTROL.**

**FAILURE TO READ AND COMPLY WITH ALL APPLICABLE WARNINGS AND INSTRUCTIONS OR ANY ONE OF THE LIMITATIONS NOTED IN THIS MANUAL CAN RESULT IN SERIOUS BODILY INJURY OR DEATH, AND/OR PROPERTY DAMAGE.**

**THE AUTEC RADIO REMOTE CONTROL IS NOT A STANDALONE PRODUCT AND IS INTENDED ONLY AS A COMPONENT ON A MACHINE:**

- **ON WHICH AND WHERE THE USE OF A RADIO REMOTE CONTROL IS APPROPRIATE,**
- **THAT CAN BE OPERATED SAFELY AND IN ACCORDANCE WITH ALL APPLICABLE LAWS, REGULATIONS AND STANDARDS BY SUCH REMOTE CONTROL.**

**ACCORDINGLY, IT IS THE RESPONSIBILITY OF THE MANUFACTURER OF THE MACHINE ON WHICH THE AUTEC RADIO REMOTE CONTROL IS TO BE INSTALLED, AND ITS DESIGN PROFESSIONALS, that a full and proper risk assessment is done to determine whether the use and installation of the Autec Radio Remote Control is appropriate for the safe and effective operation of the Machine by a Radio Remote Control in the facility and for the purposes intended, and that the installation, maintenance and operation of the Autec Radio Remote Control and all of its components are done solely and completely in accordance with this Manual, and with all local applicable laws, safety rules and standards (all of the foregoing referred to herein as "Laws, Regulations and Standards").**

**With reference to the USA market the Laws, Regulations and Standards include all safety rules and regulations of the Occupational Safety & Health Administration (OSHA) (http://www.osha.gov), all federal, state and local laws, regulations and building and electrical codes, and all applicable standards, including but not limited to ANSI Standards.**

**It is also the responsibility of the Manufacturer of the Machine on which the Autec Radio Remote Control is to be installed and used, and their design professionals, to be certain that the structure, condition, organization and markings of the Machine as installed at the facility is appropriate for and will allow for the safe and reliable use and control of the Machine through the Autec Radio Remote Control interface.**

**IT IS THE RESPONSIBILITY OF THE OWNER AND FACILITY OPERATOR, AND THEIR DESIGN PROFESSIONALS, that the installation, maintenance and operation of the Autec Radio Remote Control and all of its components are done solely and completely in accordance with this Manual, and with all applicable Laws, Regulations and Standards, even local. It is also the responsibility of the Manufacturer of the Machine on which the Autec Radio Remote Control is to be installed and used, and their design professionals, to be certain that the structure, condition, organization and markings of the Machine as installed at the facility is appropriate for and will allow for the safe and reliable use and control of the Machine through the Autec Radio Remote Control interface.**

**ONLY QUALIFIED AND PROPERLY TRAINED PERSONNEL SHOULD BE PERMITTED TO OPERATE OR USE THE AUTEC RADIO REMOTE CONTROL AND THE MACHINE OPERATED BY OR THROUGH THE AUTEC RADIO REMOTE CONTROL. ONLY QUALIFIED AND PROPERLY TRAINED PERSONNEL SHOULD BE PERMITTED TO BE IN THE VICINITY OF MACHINE OPERATED BY OR THROUGH THE AUTEC RADIO REMOTE CONTROL.**

**FAILURE TO PROPERLY INSTALL, OPERATE, MAINTAIN AND SERVICE THE AUTEC RADIO REMOTE CONTROL CAN RESULT IN SERIOUS BODILY INJURY OR DEATH AND/OR PROPERTY DAMAGE. Refer to this Manual and each of its Parts for further assistance or contact Autec. Autec is not responsible for and shall not be held liable for any installation of the Autec Radio Remote Control not performed by Autec or for any use of the Autec Radio Remote Control not in complete compliance with, and/or not maintained in complete compliance with, all Autec instructions and warnings and all applicable Laws, Regulations and Standards, even local.**

**Autec is not responsible for and shall not be held liable for any alteration or modification of the Autec Radio Remote Control, or the use of non-Autec components or products used with or incorporated into the Autec Radio Remote Control.**

**IT IS THE RESPONSIBILITY OF THE OWNER AND FACILITY OPERATOR, AND THEIR DESIGN PROFESSIONALS, to be certain that the Autec Radio Remote Control is properly maintained and serviced at all times in compliance with all Autec instructions and warnings, and with all applicable Laws, Regulations and Standards, even local.**

**IT IS THE RESPONSIBILITY OF THE OWNER AND FACILITY OPERATOR, AND THEIR OFFICERS, MANAGERS AND SUPERVISORS, to be certain that all Users of the Autec Radio Remote Control and that all Persons who are or will be working with or near the Machine operated by or through the Autec Radio Remote Control are fully and properly educated and trained by qualified Personnel in the proper and safe use of the Autec Radio Remote Control and the Machine, including without limitation complete familiarity with and understanding of Autec warnings and instructions, and all applicable Laws, Regulations and Standards, even local, and that such Users and other Persons do in fact at all times operate or work with the Autec Radio Remote Control safely and ONLY in compliance with Autec instructions and warnings and with all applicable Laws, Regulations and Standards, even local. FAILURE TO DO SO CAN RESULT IN SERIOUS BODILY INJURY OR DEATH AND/OR PROPERTY DAMAGE.**

**IT IS THE RESPONSIBILITY OF THE OWNER AND FACILITY OPERATOR, AND THEIR OFFICERS, MANAGERS AND SUPERVISORS, to be certain that the areas in which the Machine operated by or through the Autec Radio Remote Control is located and operate are clearly delineated and marked in accordance with all Autec warnings and instructions, and all applicable Laws, Regulations and Standards, even local, and otherwise sufficient to alert and warn ALL PERSONS that the Machine is operated by or through a Radio Remote Control, and prohibiting any unauthorized access thereto. FAILURE TO DO SO CAN RESULT IN SERIOUS BODILY INJURY OR DEATH AND/OR PROPERTY DAMAGE.**

**FAILURE TO OPERATE THE AUTEC RADIO REMOTE CONTROL SAFELY AND IN COMPLIANCE WITH AUTEC INSTRUCTIONS AND WARNINGS AND WITH APPLICABLE LAWS, REGULATIONS AND STANDARDS, EVEN LOCAL, AND/OR PERMITTING USERS OR OTHER PERSONS NOT PROPERLY TRAINED IN THE SAFE AND PROPER USE OF THE SYSTEM, OR THE MACHINE ON WHICH IT IS INSTALLED, CAN RESULT IN SERIOUS BODILY INJURY OR DEATH AND/OR PROPERTY DAMAGE.**

# INDEX


**1 Information on the use of instructions ..... 7**
1.1 Structure of the Instruction Manual ..... 7
1.2 Caption and terminology ..... 9
1.3 Symbols ..... 9
1.4 To whom the instructions are addressed ..... 10
1.5 Instruction storage ..... 10
1.6 Intellectual property ..... 10
**2 Brief product presentation ..... 11**
2.1 Series, Radio Remote Control and Unit ..... 11
2.2 Conformity with standards ..... 11
2.3 Contacts and useful addresses ..... 11
2.4 Warranty ..... 11
2.5 Technical assistance and spare parts ..... 11
**3 Description of the Receiving Unit ..... 12**
**4 Technical data ..... 14**
**5 Technical Data Sheet ..... 15**
**6 Plates ..... 15**
**7 Light signals ..... 16**
7.1 Seven-segment display ..... 16
7.2 POWER LED ..... 17
7.3 STATUS LED ..... 17
7.4 RUN LED ..... 18
7.5 ERR LED ..... 18
7.6 SETUP LED ..... 18
**8 Installing the Receiving Unit ..... 19**
8.1 Warnings for the Installer ..... 19
8.2 Positioning the antenna ..... 19
8.3 Wiring ..... 20
8.4 At end of installation ..... 20
**9 Maintenance ..... 21**
**10 Malfunction signalled by the Receiving Unit ..... 22**
**11 Decommissioning and disposal ..... 24**

# 1 Information on the use of instructions

Before reading this part of the Manual, you must read and understand the general part (Part A) of the Manual provided with the Radio Remote Control.

## 1.1 Structure of the Instruction Manual

The Manual for the use and maintenance of Autec Dynamic Plus series Radio Remote Controls consists of different parts, that form the Manual altogether; the Manual must be read carefully, understood and applied by the Radio Remote Control's Owner, User and by all those Persons that, for any reasons, may operate with the Radio Remote Control or with the Machine where it is installed.
The following table describes the structure of the Instruction Manual for the use and the maintenance of the Radio Remote Control.

| Part | Title | Contents |
|---|---|---|
| **A** | General part | - General information regarding the series,<br>- directions for risk assessment of the "Machine+Radio Remote Control" system,<br>- warnings for installation of the Radio Remote Control,<br>- warnings for use and maintenance of the Radio Remote Control,<br>- instructions for correct Radio Remote Control transportation and storage. |
| **B** | Conformity and frequencies | - Operating frequency bands of the Radio Remote Control,<br>- conformity and law references of the Radio Remote Control. |
| **C** | Transmitting Unit | Description and instructions concerning the Transmitting Unit, including:<br>- description of operation,<br>- commands,<br>- light signals,<br>- malfunctions,<br>- additional instructions to the general part. |
| **D** | Receiving Unit | Description and instructions concerning the Receiving Unit, including:<br>- description of operation,<br>- light signals,<br>- malfunctions,<br>- additional instructions to the general part. |
| **E** | Battery and Battery Charger | Description, warnings and instructions concerning batteries and Battery Chargers, including:<br>- description of operation,<br>- light signals,<br>- malfunctions,<br>- instructions for the User. |

Usage and maintenance instructions are supplemented by the Radio Remote Control's Technical Data Sheet, that:

- describes the Transmitting Unit's configuration,
- indicates the relation between commands sent by the Transmitting Unit and those available on the Receiving Unit.

Usage and maintenance instruction as a whole are to be considered as an integral part both of the Autec Radio Remote Control and of the Machine, system, device or Machinery system where the Radio Remote Control is installed.
The Manufacturer of the Machine on which the Autec Radio Remote Control is installed, and the Owner and User of the Machine, must make sure that the Instruction Manual and all of its parts are included in the Instruction Manual of the Machine.

| | |
|---|---|
| ⓘ | The CD attached to each Instruction Manual includes the translations of the Manual. |

Act as follows to identify the single Manual parts in the relevant language in the CD:

- choose the desired language,
- select the single parts of the Manual: refer to the code name provided on the cover of each part.

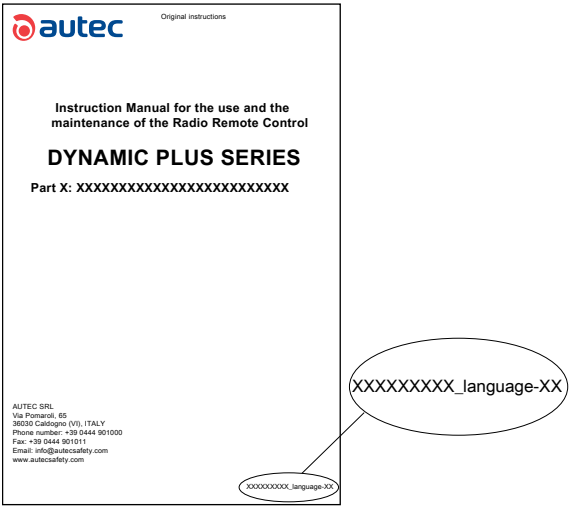

## 1.2 Caption and terminology

| | |
|---|---|
| | Contact Autec if any of the instructions, symbols, warnings or images are not clear and understandable, or if you have doubts or questions. |

In this part of the Manual, the terms listed below have the same meaning explained in the corresponding paragraph of the general part (Part A):

- **Unit**
- **Radio Remote Control**
- **Transmitting Unit**
- **Receiving Unit**
- **Machine**
- **Manufacturer**
- **Installer**
- **User**
- **Maintenance Technician**
- **Manual or Instruction Manual**
- **Installation Manual**
- **Person**
- **Owner**

Functions indicated for the Manufacturer, the Installer, the User and the Maintenance Technician may be performed by a single Person, if they have the needed competence and undertake the resulting responsibilities. Each Person must be aware of the instructions contained in the Manual, depending on the activity they carry out.
For example, if a Manufacturer is also the Installer, and/or Maintenance Technician, he must also know and follow the instructions specifically addressed to those Persons. The same applies, for example, if a User is also the Manufacturer and/or the Installer.

## 1.3 Symbols

This symbol identifies the parts of text in the Manual that must be read with special attention.

| | |
|---|---|
| | This symbol identifies the parts of text in the Manual that must be read with special attention. |

| | |
|---|---|
| WARNING | **This symbol identifies the parts of text in the Manual containing warnings, information and/or instructions that are particularly relevant with regards to safety; failure in understanding them may cause hazards for People and/ or property.** |

## 1.4 To whom the instructions are addressed

Addressees of instructions are listed in the paragraph with the same title in the general part: please refer to that part.

## 1.5 Instruction storage

Regulation for the storage of instructions are described in the paragraph with the same title in the general part: please refer to that part.

## 1.6 Intellectual property

Restrictions connected to intellectual property are described in the paragraph with the same title in the general part: please refer to that part.

# 2 Brief product presentation

## 2.1 Series, Radio Remote Control and Unit

The object of this part of the Manual is the CRD Receiving Unit of an Dynamic Plus series' Radio Remote Control.
Autec Dynamic Plus series' Radio Remote Controls are designed to be used on Machines and provide a command interface to their command and control system, to be used from an appropriate distance and position.

## 2.2 Conformity with standards

The conformity of Radio Remote Controls with standards and with working requirements and conditions in the single Countries is provided in the related specific part “Conformity and frequencies” (Part B) of the Manual.

## 2.3 Contacts and useful addresses

The Radio Remote Controls are produced by Autec srl – Via Pomaroli, 65 – 36030 Caldogno (VI) – ITALY.
You can find contacts for Autec, its distributors, dealers and authorized service centres on the website www.autecsafety.com.

## 2.4 Warranty

General warranty conditions are indicated both in the relevant sheet provided together with this documentation, and in the specific page on the website www.autecsafety.com.

## 2.5 Technical assistance and spare parts

If you need technical services and/or spare parts, please refer to contacts provided in the website www.autecsafety.com.
When applying for technical service to Autec, its distributors, dealers and authorized service centres, the Radio Remote Control's serial number is required; you can find it on the identification plate on the Transmitting Unit and/or on the Receiving Unit.

# 3 Description of the Receiving Unit

The CRD Receiving Unit interfaces with the Machine via digital and proportional outputs or via the CANopen® communication protocol to communicate in a CAN bus network.
Two STOP outputs and two SAFETY outputs are amongst the Receiving Unit's digital outputs. STOP outputs are identified as STP_1 and STP_2 in the Technical Data Sheet, whereas SAFETY outputs are identified as SAF_1 and SAF_2.

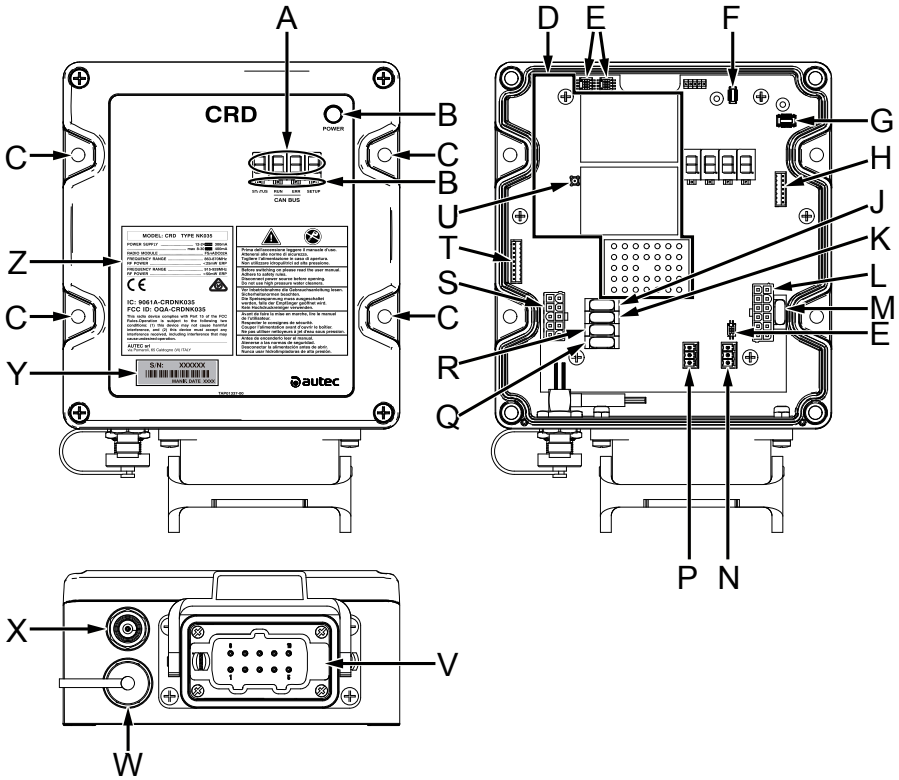

| | |
|---|---|
| **A** | Seven-segment display |
| **B** | LEDs |
| **C** | Mounting holes |
| **D** | Radio area on the electronic board |
| **E** | DIP switches |
| **F** | ID-KEY connector (for the address key) |
| **G** | DATA-KEY connector (for the memory card) |
| **H** | Connector for configuration |
| **J** | Fuse F5 |
| **K** | Fuse F6 |
| **L** | Connector for power supply and digital outputs |
| **M** | Fuse F9 |
| **N** | Connector for CAN BUS 2 network |
| **P** | Connector for CAN BUS 1 network |
| **Q** | Fuse F8 |
| **R** | Fuse F7 |
| **S** | Connector for STOP and SAFETY outputs |
| **T** | Internal connector for cable control |
| **U** | MMCX connector for external antenna with extension |
| **V** | Plug or cable gland |
| **W** | External connector for cable control |
| **X** | TNC connector for external antenna with extension |
| **Y** | Radio Remote Control identification plate |
| **Z** | Technical data plate |

# 4 Technical data

Power supply ..... 8-30V⎓
Internal antenna ..... integrated
External antenna ..... dedicated stylus ¼λ
Rated current of STP_1 and STP_2 outputs ..... 3A (30V⎓)
Rated current of STP_1 and STP_2 outputs (filtered) ..... 0,5A (30V⎓)
Rated current of SAF_1 and SAF_2 outputs ..... 3A (30V⎓)
Rated current of digital outputs ..... 2A (30V⎓)
Protection of the STP_1 output (fuse F8) ..... 3A (32V⎓, autofuse)
Protection of the STP_2 output (fuse F7) ..... 3A (32V⎓, autofuse)
Protection of the SAF_1 output (fuse F6) ..... 3A (32V⎓, autofuse)
Protection of the SAF_2 output (fuse F5) ..... 3A (32V⎓, autofuse)
Protection of power supply (fuse F9) ..... 10A (32V⎓, autofuse)
UMFS intervention time ..... 1s
Housing material ..... PA6 (30% fg)
Protection degree ..... IP65 (NEMA 4)
Weight ..... 1kg (2.2Lb)

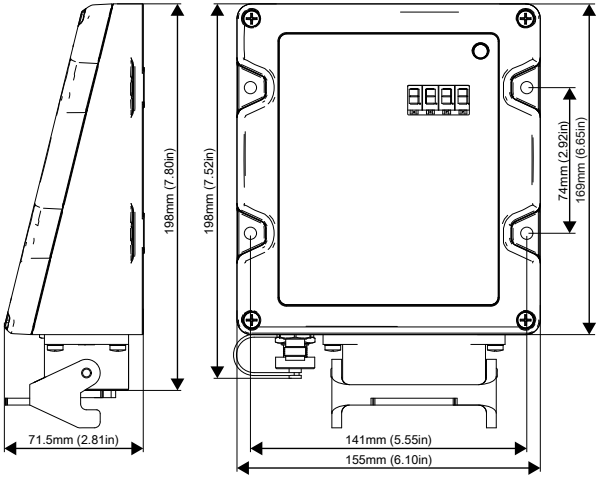


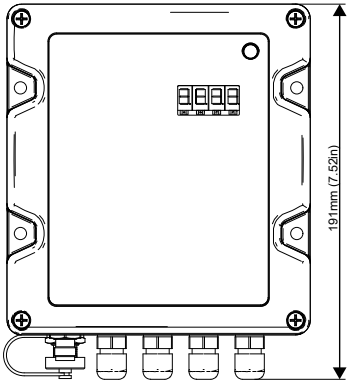

## 5 Technical Data Sheet

The Radio Remote Control 's Technical Data Sheet:
- describes the Transmitting Unit's configuration,
- indicates the relation between commands sent by the Transmitting Unit and those available on the Receiving Unit.

The Technical Data Sheet must be filled in, checked and signed by the Installer, who is responsible for correct wiring.
A Technical Data Sheet must always be kept together with this Manual: if you need to use the Technical Data Sheet for administrative purposes (tests, check, etc.), make a copy of it.

| | |
|---|---|
| WARNING | **The wiring of the Receiving Unit's outputs must always reflect the wiring indicated in the Technical Data Sheet.** |

## 6 Plates

The CRD Receiving Unit has the following plates:

| Plate | Position | Content |
|---|---|---|
| **Radio Remote Control identification plate** | Receiving Unit's cover | Radio Remote Control serial number (S/N), bar code and manufacturing year. |
| **Technical data plate** | Receiving Unit's cover | MODEL, TYPE and main Receiving Unit technical data, marking and possible Radio Remote Control marks. |

# 7 Light signals

The CRD Receiving Unit has four seven-segment displays and five LEDs called POWER, STATUS, RUN, ERR and SETUP.

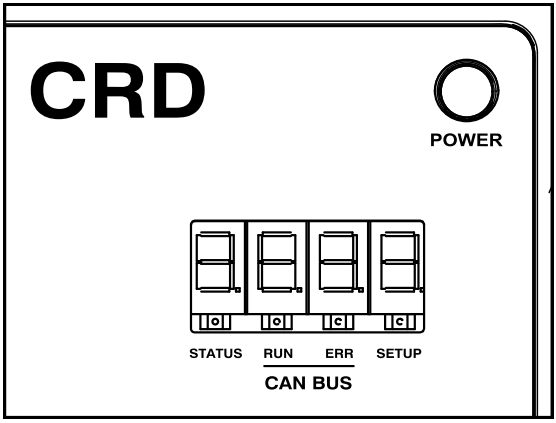


The meaning of light signals is described in the following paragraphs; possible actions to carry out are given in chapter 10.

## 7.1 Seven-segment display

The seven-segment displays show the status of the Receiving Unit and of the radio link.

| Signal | Meaning |
|---|---|
| | The Transmitting and Receiving Unit do not communicate. |
| a | The radio remote control is started up. |
| a | Receiving Unit's internal temperature (°C). |
| a | Receiving Unit's supply voltage (V). |

a. These signals alternate when the Radio Remote Control is started.

In addition, the seven-segment displays signal possible errors on the STOP and SAFETY outputs (see chapter 10).

## 7.2 POWER LED

The POWER LED indicates the status of the Receiving Unit and of the radio link.

| Signal | Meaning |
|---|---|
| **The POWER LED is off.** | The Receiving Unit is off. |
| **The POWER LED is on.** | The Transmitting and Receiving Unit do not communicate. |
| **The POWER LED repeats the sequence: a blink and a pause.** | The Radio Remote Control is started and the Units communicate via radio link in the 863-870MHz frequency band. |
| **The POWER LED repeats the sequence: two blinks and a pause.** | The Radio Remote Control is started and the Units communicate via radio link in the 915-928MHz frequency band. |
| **The POWER LED repeats the sequence: three blinks and a pause.** | The Radio Remote Control is started and the Units communicate via cable control. |

## 7.3 STATUS LED

The STATUS LED warns about anomalies on the outputs or on the power supply and indicates the reception of data from the Transmitting Unit.

| Signal | Meaning |
|---|---|
| **The STATUS LED is off.** | The Transmitting and Receiving Unit do not communicate. |
| **The STATUS LED blinks slowly.** | Over-voltage on power supply. |
| **The STATUS LED blinks fast.** | The Receiving Unit receives data from the Transmitting Unit. |

## 7.4 RUN LED

The RUN LED indicates the status of the communication between the Receiving Unit and the CAN network Master node.

| Signal | Meaning |
|---|---|
| **The RUN LED is off.** | The Receiving Unit does not work as a CAN network node. |
| **The RUN LED blinks.** | The Receiving Unit does not send commands in the CAN network. |
| **The RUN LED is on.** | The Receiving Unit is working correctly as a node in the CAN network. |

RUN LED signals reflect the guidelines of the CANopen® standard, CiA recommendation 303-3.

## 7.5 ERR LED

The ERR LED indicates the status of the CAN communication.

| Signal | Meaning |
|---|---|
| **The ERR LED is off.** | The CAN communication is working correctly. |
| **The ERR LED blinks.** | The CAN communication does not work correctly. |
| **The ERR LED is on.** | No CAN communication. |

ERR LED signals reflect the guidelines of the CANopen® standard, CiA recommendation 303-3.

## 7.6 SETUP LED

The SETUP LED shows the memory card and the address key status.

| Signal | Meaning |
|---|---|
| **The SETUP LED is off.** | No errors in the memory card or in the address key. |
| **The SETUP LED blinks once.** | Error on the address key. |
| **The SETUP LED blinks twice.** | Error on the memory card. |

# 8 Installing the Receiving Unit

The chapter "Installation" in "Part A" of the Instruction Manual contains the warnings for the installation that add to those provided in this chapter. Therefore, please refer to that part of the Manual.

## 8.1 Warnings for the Installer

The Installer must:

- observe and comply with all instructions and warnings provided by the Machine Manufacturer;
- observe and comply with all instructions and warnings provided by the Person responsible for the Machine commissioning or making the Machine available for work;
- observe and comply with all instructions and warnings provided in the Radio Remote Control Manual;
- observe and comply with all applicable Laws, Regulations and Standards, even local.
- operate the Autec Radio Remote Control only in accordance with this Manual and all of its Parts, and with all Autec warnings and instructions, and with applicable Laws, Regulations and Standards,even local;
- operate the Machine operated by or through the Autec Radio Remote Control only in accordance with the Machine Manufacturer’s instructions and warnings, and with applicable Laws, Regulations and Standards, even local;
- operate the Machine operated by or through the Autec Radio Remote Control only when they are in a safe condition and can perfectly see the whole Machine's working area;
- immediately inform their supervisors and/or the people in charge for the working place and/or for the Machine about any possible failure, damage, loosening, anomalous wear, detachment and/or any other anomaly that may cause malfunction to the Radio Remote Control and/or to the Machine, or that may cause damage to people and/or property;
- keep the Transmitting Unit secure and out of reach of unauthorized and unqualified Personnel.

| | |
|---|---|
| | ADDITIONAL WARNINGS AND INSTRUCTIONS THAT ARE CONTAINED IN THE OTHER PARTS OF THIS MANUAL MUST BE FOLLOWED. |

## 8.2 Positioning the antenna

| | |
|---|---|
| WARNING | **The CRD Receiving Unit may be configured with internal antenna or external antenna (see Technical Data Sheet). If the antenna is external, it cannot be mounted directly on the Receiving Unit's casing, but it must be installed with the antenna cable-extension kit.** |

## 8.3 Wiring

WARNING

**Wiring inside the Receiving Unit shall be made with electrical wires resistant to at least 125°C usage temperature.**

**Group all cabling wires so that they are far from the radio area in the electronic board, in order to avoid interference and danger related to electrical safety.**

**The current of STOP outputs is interrupted at regular intervals for approx. 1 ms every 100 ms. Risk assessment must consider this interruption. If STOP outputs are used to power electronic devices, check that they are compatible with this recurring interruption (use suitable filters if necessary).**

**When failure is detected on the SAFETY outputs, the STOP outputs are automatically opened within 200 ms. Risk assessment must consider this delay.**

**SAF_1 and SAF_2 outputs are designed to drive power loads and are protected by means of fuses and transils, to ensure the longest lifetime in most applications.If these outputs are connected to inductive loads (i.e. solenoid valves, relays), it is recommended to connect a reverse recovery diode close to the load, to further reduce the effects of demagnetisation currents.**

## 8.4 At end of installation

WARNING

**Correctly close the Receiving Unit in order to maintain the protection from dust, contaminants and water:**

- **make sure that the gasket is intact and correctly seated,**
- **check that the housing parts correctly fit so that they overlap,**
- **tighten the screws.**

# 9 Maintenance

Instructions for correct Radio Remote Control maintenance are described in the chapter "Maintenance" included in "Part A" of the Instruction Manual. Therefore, please refer to that part of the Manual.

# 10 Malfunction signalled by the Receiving Unit

The table below lists malfunctions highlighted by signals on the Receiving Unit.
If the problem persists after attempting the suggested solution, contact the support service of the Machine Manufacturer.

| Signals | Possible reason | Solutions |
|---|---|---|
| **The POWER LED is off.** | The Receiving Unit is off. | Make sure that the power supply protection fuse is intact (fuse F9). Correctly plug in the connecting plug and power on the Receiving Unit. |
| 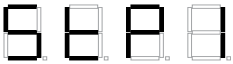 | Error on output STP_1. | Make sure that the protection fuse for output STP_1 is intact (fuse F8). Correctly plug in the connecting plug. Make sure that output STP_1 is wired correctly. |
| | Error on STP_2 output. | Make sure that the protection fuse for output STP_2 is intact (fuse F7). Correctly plug in the connecting plug. Make sure that output STP_2 is wired correctly. |
| | Error on output SAF_1. | Make sure that the protection fuse for output SAF_1 is intact (fuse F6). Correctly plug in the connecting plug. Make sure that output SAF_1 is wired correctly. |
| | Error on output SAF_2. | Make sure that the protection fuse for output SAF_2 is intact (fuse F5). Correctly plug in the connecting plug. Make sure that output SAF_2 is wired correctly. |
| **The STATUS LED blinks slowly.** | Over-voltage on power supply. | Make sure that the Receiving Unit power supply is within the voltage limits provided in the technical data. |

| Signals | Possible reason | Solutions |
|---|---|---|
| **The STATUS LED blinks fast and irregularly.** | The Receiving Unit does not receive some of the data sent by the Transmitting Unit. | Contact the support service of the Machine Manufacturer. |
| **The RUN LED blinks.** | The Receiving Unit does not send commands in the CAN network. | Contact the support service of the Machine Manufacturer. |
| **The ERR LED blinks.** | CAN communication error. | Contact the support service of the Machine Manufacturer. |
| **The SETUP LED blinks once.** | Error on the address key. | Contact the support service of the Machine Manufacturer. |
| **The SETUP LED blinks twice.** | Error on the memory card. | Contact the support service of the Machine Manufacturer. |

# 11 Decommissioning and disposal

Instructions for correct decommissioning and disposal of Radio Remote Controls are described in chapter "Decommissioning and disposal" in "Part A" of the Instruction Manual. Therefore, please refer to that part of the Manual.