Instruction Manual for FSARTBAU1 radio module

Original instructions

INDEX

1. Description FSARTBAU1 radio module 3
1.1 Identification 3
1.2 Technical data 3
1.3 Photos 3
2. Applications 5
3. Functional description 6
4. Frequencies groups 7
4.1 Frequencies group “A” 7
4.2 Frequencies group “B” 7
4.3 Frequencies group “C” 8
4.4 Frequencies group “D” 8
5. Approval for US 10
5.1 FCC 10
5.2 FCC End Product Labeling 10
6. Approval for Canada 11
6.1 ISED 11
6.2 ISED 11
6.3 ISED End Product Labeling 11
6.4 ISED Étiquetage du produit final 11

1. Description FSARTBAU1 radio module

1.1 Identification

Equipment	radio module
Radio module	FSARTBAU1
Used frequency band	915-928 MHz
Manufacturer	AUTEC srl Via Pomaroli, 65 36030 CALDOGNO (VI)

1.2 Technical data

Used frequency band	915 - 928 MHz
Type of modulation	19300 Baud RC-FSK
Channel spacing	50 kHz
Duplex direction	half duplex
Hamming distance	>=16
Probability of non-recognition of error	<10 exp-15
Dimensions	(67x67x9) mm
Power supply	3,3Vdc (+/- 10%)
Transportation range temperature	-40°C to +70°C (-40°F to +158°F)
Storage range temperature	-40°C to +85°C (-40°F to +158°F)
Use range temperature	-25°C to +55°C (-13°F to +130°F) for remote stations -25°C to +70°C (-13°F to +158°F) for base stations

1.3 Photos

Front view

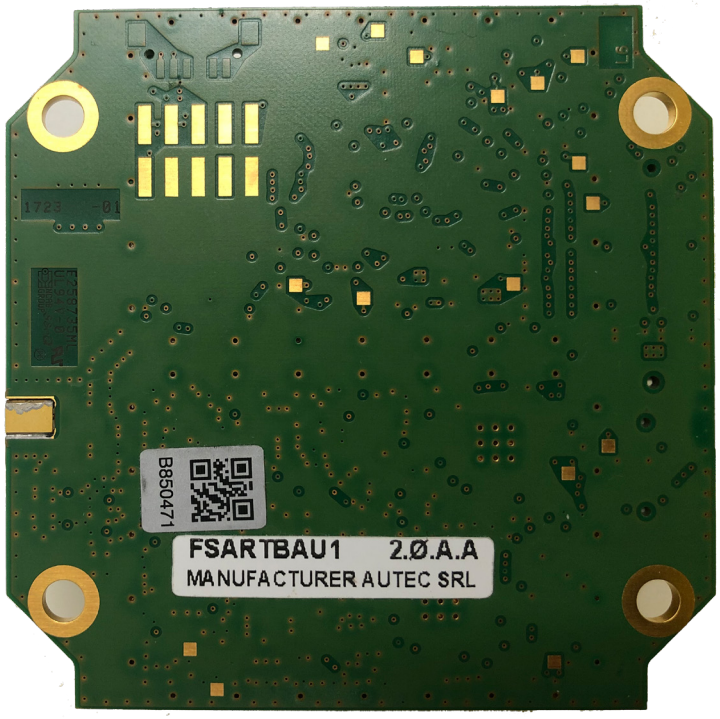

Back view

2. Applications

The use of FSARTBAU1 radio module is limited to remote and base stations of Autec Dynamic series.

In addition to the above, this radio module cannot be installed:
- inside equipment that is portable by user
- in equipment that are intended for the use in environments requiring explosion-proof features or in any usage situation that may pose the risk of explosion.
- in equipment for moving, raising and transporting people, if the Machine's characteristics and their related risks and/or the risks related to the use of a Radio Remote Control do not make it possible for the Machine Manufacturer to ensure that all the safety requirements are met. Such requirements must be taken into account when designing and manufacturing the Machine, also bearing in mind that a radio module will be used. The Machine Manufacturer may allow the installation and use of the radio module on such applications under their own responsibility.
- in equipment that create or can create dangerous situations if they stop due to the loss of radio link.
- in equipment that do not allow a risk-free installation of a radio module, due to their functions or features and/or to the risks related to their use.
- if the applicable safety-related laws in the country where the Machine is used, regulations and standards (even local ones), even concerning safety in the workplace, do not allow the use of radio module to control the Machines.

INSTALLATION OF FSARTBAU1 RADIO MODULE IN THE ABOVE MENTIONED EQUIPMENT AND SITUATIONS MAY CAUSE SERIOUS INJURY OR DEATH OR PROPERTY DAMAGE.

2.1 Integration in the host

The module is installed in the remote stations according to the following instructions:

1

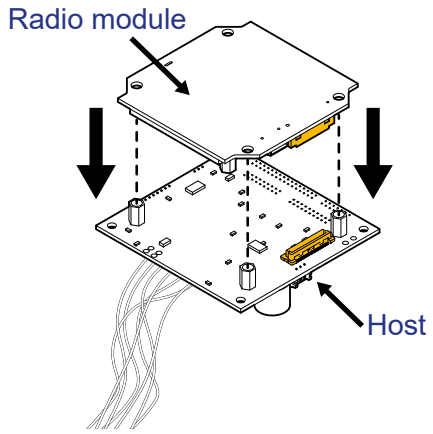

2

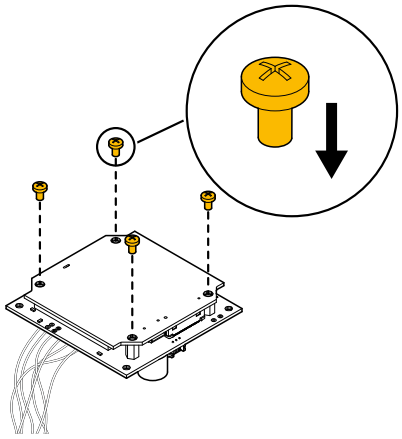

3

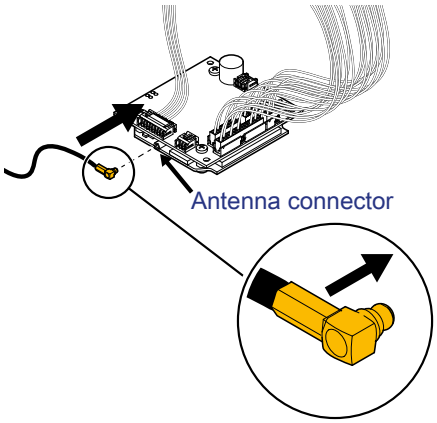

4

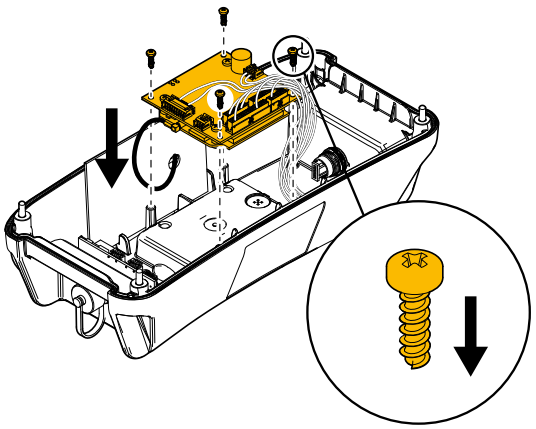

The module is installed in the base stations according to the following instructions:

1

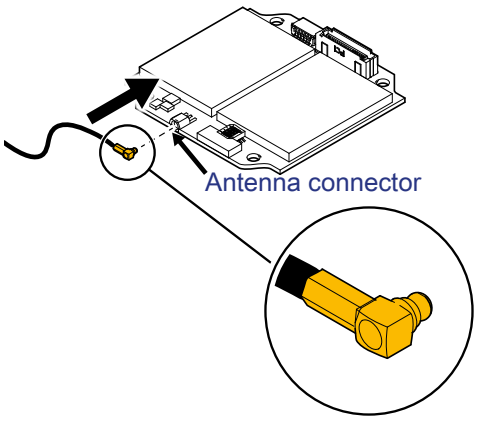

2

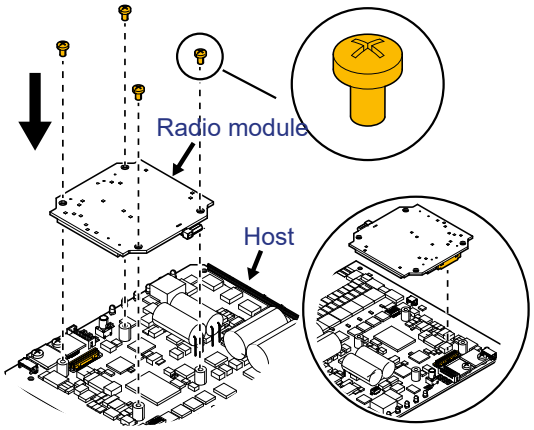

The connection between the radio module and the antenna is made through the coaxial cable inside the base station or the remote station..

3. Functional description

The FSARTBAU1 radio transceiver module is used in both Autec's Transmitting Units (TU) and Receiving Units (RU); it is based on the commercial RFIC (Radio Frequency Integrated Circuit) ADF7021 made by Analog Devices, which encompasses all the circuits and functions needed to build a narrow-band, high performance, UHF transceiver for digital signaling.
See Analog Devices' website for a complete and up-to-date description of ADF7021, which is beyond the scope of this document.

This radio module has been approved to operate with the antenna types listed below with the maximum permissible gain and required antenna impedance for each antenna type indicated.
Antenna types not included in this list, having a gain greater than the maximum gain indicated for that type, are strictly prohibited for use with this device.

Antenna	antenna provided by Autec
Antenna Type for remote station	Autec ANT039
Antenna gain for remote station	<= 0dBi
Antenna Type for base station	Autec ANT042
Antenna gain for base station	<= 1.23dBi
Antenna Impedance	50 ohm

Autec uses only the dedicated antenna supplied either with the radio module or as original spare part. The use of any other type of antenna is prohibited and will invalidate the warranty.

For Autec base stations the installer places the antenna in a position that ensures a minimum separation distance of 5mm from all the people that can be in the working area.

For Autec remote stations the position of the antenna ensures a minimum separation distance of 5mm sufficient to respect the human exposure to RF radiation limits.

4. Frequencies groups

In the FSARTBAU1 radio module there are 4 groups selectable inside the 256 channels available: group A, group B, group C, group D. The group is chosen by the equipment where the FSARTBAU1 radio module is mounted based on the serial number of the equipment.

4.1 Frequencies group “A”

The channel range of group A is 915.075 - 927.675MHz.
The group contains 64 channels with a minimum space between them of 200kHz.

GROUP A							
#	MHz	#	MHz	#	MHz	#	MHz
0	915.075	16	918.275	32	921.475	48	924.675
1	915.275	17	918.475	33	921.675	49	924.875
2	915.475	18	918.675	34	921.875	50	925.075
3	915.675	19	918.875	35	922.075	51	925.275
4	915.875	20	919.075	36	922.275	52	925.475
5	916.075	21	919.275	37	922.475	53	925.675
6	916.275	22	919.475	38	922.675	54	925.875
7	916.475	23	919.675	39	922.875	55	926.075
8	916.675	24	919.875	40	923.075	56	926.275
9	916.875	25	920.075	41	923.275	57	926.475
10	917.075	26	920.275	42	923.475	58	926.675
11	917.275	27	920.475	43	923.675	59	926.875
12	917.475	28	920.675	44	923.875	60	927.075
13	917.675	29	920.875	45	924.075	61	927.275
14	917.875	30	921.075	46	924.275	62	927.475
15	918.075	31	921.275	47	924.475	63	927.675

4.2 Frequencies group “B”

The channel range of group B is 915.125 - 927.725MHz.
The group contains 64 channels with a minimum space between them of 200kHz.

GROUP B							
#	MHz	#	MHz	#	MHz	#	MHz
0	915.125	16	918.325	32	921.525	48	924.725
1	915.325	17	918.525	33	921.725	49	924.925
2	915.525	18	918.725	34	921.925	50	925.125
3	915.725	19	918.925	35	922.125	51	925.325
4	915.925	20	919.125	36	922.325	52	925.525
5	916.125	21	919.325	37	922.525	53	925.725
6	916.325	22	919.525	38	922.725	54	925.925
7	916.525	23	919.725	39	922.925	55	926.125
8	916.725	24	919.925	40	923.125	56	926.325
9	916.925	25	920.125	41	923.325	57	926.525
10	917.125	26	920.325	42	923.525	58	926.725

GROUP B							
#	MHz	#	MHz	#	MHz	#	MHz
11	917.325	27	920.525	43	923.725	59	926.925
12	917.525	28	920.725	44	923.925	60	927.125
13	917.725	29	920.925	45	924.125	61	927.325
14	917.925	30	921.125	46	924.325	62	927.525
15	918.125	31	921.325	47	924.525	63	927.725

4.3 Frequencies group “C”

The channel range of group C is 915.175 - 927.775MHz.
The group contains 64 channels with a minimum space between them of 200kHz.

GROUP C							
#	MHz	#	MHz	#	MHz	#	MHz
0	915.175	16	918.375	32	921.575	48	924.775
1	915.375	17	918.575	33	921.775	49	924.975
2	915.575	18	918.775	34	921.975	50	925.175
3	915.775	19	918.975	35	922.175	51	925.375
4	915.975	20	919.175	36	922.375	52	925.575
5	916.175	21	919.375	37	922.575	53	925.775
6	916.375	22	919.575	38	922.775	54	925.975
7	916.575	23	919.775	39	922.975	55	926.175
8	916.775	24	919.975	40	923.175	56	926.375
9	916.975	25	920.175	41	923.375	57	926.575
10	917.175	26	920.375	42	923.575	58	926.775
11	917.375	27	920.575	43	923.775	59	926.975
12	917.575	28	920.775	44	923.975	60	927.175
13	917.775	29	920.975	45	924.175	61	927.375
14	917.975	30	921.175	46	924.375	62	927.575
15	918.175	31	921.375	47	924.575	63	927.775

4.4 Frequencies group “D”

The channel range of group D is 915.225 - 927.825MHz.
The group contains 64 channels with a minimum space between them of 200kHz.

GROUP D							
#	MHz	#	MHz	#	MHz	#	MHz
0	915.225	16	918.425	32	921.625	48	924.825
1	915.425	17	918.625	33	921.825	49	925.025
2	915.625	18	918.825	34	922.025	50	925.225
3	915.825	19	919.025	35	922.225	51	925.425
4	916.025	20	919.225	36	922.425	52	925.625
5	916.225	21	919.425	37	922.625	53	925.825
6	916.425	22	919.625	38	922.825	54	926.025
7	916.625	23	919.825	39	923.025	55	926.225

GROUP D							
#	MHz	#	MHz	#	MHz	#	MHz
8	916.825	24	920.025	40	923.225	56	926.425
9	917.025	25	920.225	41	923.425	57	926.625
10	917.225	26	920.425	42	923.625	58	926.825
11	917.425	27	920.625	43	923.825	59	927.025
12	917.625	28	920.825	44	924.025	60	927.225
13	917.825	29	921.025	45	924.225	61	927.425
14	918.025	30	921.225	46	924.425	62	927.625
15	918.225	31	921.425	47	924.625	63	927.825

5. Approval for US

5.1 FCC

This radio module complies with Part 15 of the FCC Rules. Operation is subject to the following two conditions:

1. This device may not cause harmful interference, and
2. This device must accept any interference received, including interference that may cause undesirable operation.

Any changes or modifications not expressly approved by Autec could void the user's authority to operate the equipment.

The FCC ID for this radio module is "OQA-FSARTBAU1".

5.2 FCC End Product Labeling

The FSARTBAU1 module is labeled with its own FCC ID. If the FCC ID is not visible when the module is installed inside another device, then the outside of the device into which the module is installed must also display a label referring to the enclosed module.
In that case, the final end product must be labeled in a visible area with the following

- "Contains Transmitter Module FCC ID: OQA-FSARTBAU1"
- "Contains FCC ID: OQA-FSARTBAU1"

6. Approval for Canada

6.1 ISED

This radio transmitter has been approved by Industry Canada to operate with the external dedicated antenna. Other antenna types are strictly prohibited for use with this device.
This device complies with Industry Canada's license-exempt RSS standards. Operation is subject to the following two conditions:
1. This device may not cause interference; and
2. This device must accept any interference, including interference that may cause undesired operation of the device.

The IC for this radio module is 9061A-FSARTBAU1.

6.2 ISED

Cet émetteur radio a reçu l'approbation d'Industrie Canada pour une exploitation avec l'antenne puce incorporée. Il est strictement interdit d'utiliser d'autres types d'antenne avec cet appareil.

Le présent appareil est conforme aux CNR d'Industrie Canada applicables aux appareils radio exempts de licence. L'exploitation est autorisée aux deux conditions suivantes:
1. L'appareil ne doit pas produire de brouillage; et
2. L'appareil doit accepter tout brouillage radioélectrique subi, même si le brouillage est susceptible de provoquer un fonctionnement non désiré de l'appareil.

Le IC pour ce module radio est 9061A-FSARTBAU1.

6.3 ISED End Product Labeling

The FSARTBAU1 module is labeled with its own IC ID. If the IC ID is not visible when the module is installed inside another device, then the outside of the device into which the module is installed must also display a label referring to the enclosed module.
In that case, the final end product must be labeled in a visible area with the following:
- "Contains Transmitter Module IC: 9061A-FSARTBAU1."
- "Contains IC: 9061A-FSARTBAU1".

6.4 ISED Étiquetage du produit final

L'étiquette du Module FSARTBAU1 porte son propre identifiant IC. Si l'identifiant IC n'est pas visible quand le module est installé à l'intérieur d'un autre appareil, alors l'extérieur de l'appareil dans lequel le module est installé doit aussi porter une étiquette faisant référence au module qu'il contient.
Dans ce cas, une étiquette comportant les informations suivantes doit être apposée sur une partie visible du produit final.
- "Contient le module émetteur IC: 9061A-FSARTBAU1"
- "Contient IC : 9061A-FSARTBAU1".