EDIT PEAK LIST (Prescan Results)

Trace1:	FCCBHPK
Trace2:	FCCBHAV
Trace3:	---

TRACE		FREQUENCY	LEVEL dBµV/m	DELTA LIMIT dB
2	Average	3.0004 GHz	35.06	-18.91
1	Max Peak	3.0496 GHz	46.11	-27.86
1	Max Peak	3.4732 GHz	45.60	-28.37
2	Average	3.5316 GHz	34.50	-19.47
2	Average	3.7112 GHz	34.67	-19.31
1	Max Peak	3.7992 GHz	46.14	-27.83
1	Max Peak	4.4104 GHz	45.62	-28.35
2	Average	4.4684 GHz	33.82	-20.15
1	Max Peak	4.8456 GHz	46.96	-27.01
2	Average	4.8672 GHz	34.99	-18.98
2	Average	5.4116 GHz	36.45	-17.52
1	Max Peak	5.43 GHz	48.32	-25.65
1	Max Peak	6.1524 GHz	49.38	-24.59
2	Average	6.1648 GHz	37.26	-16.71
2	Average	6.9524 GHz	37.63	-16.34
1	Max Peak	6.9556 GHz	50.56	-23.41
2	Average	8.142 GHz	40.05	-13.92
1	Max Peak	8.1452 GHz	52.29	-21.68
1	Max Peak	9.1032 GHz	56.17	-17.80
2	Average	9.2376 GHz	44.25	-9.72

Gandini 19032426

CMC Centro Misure Compatibilità S.r.l.

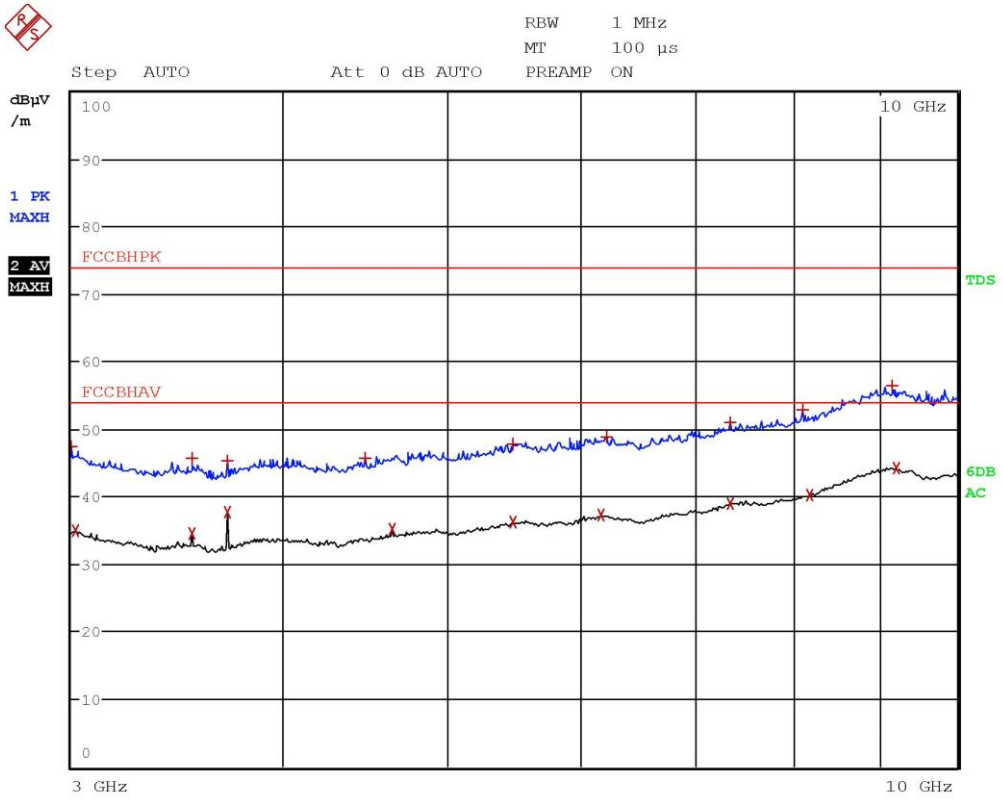

Gandini 19032427

CMC Centro Misure Compatibilità S.r.l.

EDIT PEAK LIST (Prescan Results)

Trace1:	FCCBHPK
Trace2:	FCCBHAV
Trace3:	---

	TRACE	FREQUENCY	LEVEL dBµV/m	DELTA LIMIT dB
1	Max Peak	3.002 GHz	47.34	-26.63
2	Average	3.0196 GHz	34.98	-18.99
2	Average	3.5316 GHz	34.46	-19.51
1	Max Peak	3.5316 GHz	45.64	-28.33
2	Average	3.7112 GHz	37.69	-16.28
1	Max Peak	3.7112 GHz	45.24	-28.73
1	Max Peak	4.4744 GHz	45.75	-28.22
2	Average	4.6392 GHz	35.14	-18.83
1	Max Peak	5.4624 GHz	47.77	-26.20
2	Average	5.4648 GHz	36.17	-17.80
2	Average	6.1556 GHz	37.39	-16.58
1	Max Peak	6.2092 GHz	48.77	-25.20
1	Max Peak	7.3484 GHz	50.85	-23.12
2	Average	7.3492 GHz	39.03	-14.94
1	Max Peak	8.0952 GHz	52.74	-21.23
2	Average	8.1756 GHz	40.23	-13.74
1	Max Peak	9.1428 GHz	56.35	-17.62
2	Average	9.2004 GHz	44.22	-9.75

Gandini 19032427

Result: The requirements are met

CMC Centro Misure Compatibilità S.r.l.

11.3 20 dB bandwidth

Test set-up and execution

- FCC Rules and Regulation; Titles 47 Part 15.247
- ANSI C63.10 cl. 7.8.7
- Internal procedure PM001
- See clause 4 of this test report

Test configuration and test method

Test site:
Laboratory

Auxiliary equipment:
See clause 4 of this test report

EUT exercising

See clause 4 of this test report

Test equipment used

CMC S295
Measurement uncertainty: See clause 7 of this test report

Test specification

See FCC Part 15.247

Environmental conditions

Temperature (°C)	*Atmospheric pressure (kPa)*	*Relative humidity (%)*
22	100	45

Acceptance limits: The maximum allowed 20 dB bandwidth of the hopping channel is 500 kHz

CMC Centro Misure Compatibilità S.r.l.

Setup

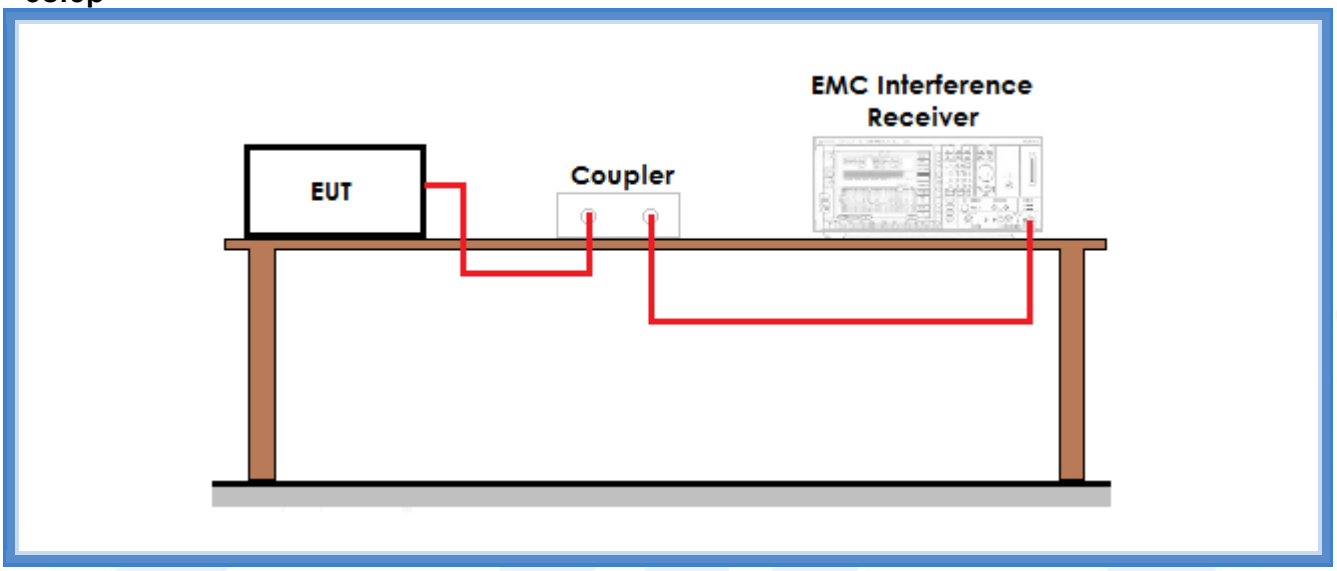

Result

Frequency (MHz)	*Graphs*	*20 dB bandwidth (kHz)*	*Maximum 20 dB bandwidth allowed (kHz)*	*Results*
915,075	G19032434	23,2	500	Complies
921,425	G19032435	23,8	500	Complies
927,825	G19032436	23,6	500	Complies

CMC Centro Misure Compatibilità S.r.l.

Graphs

19032434

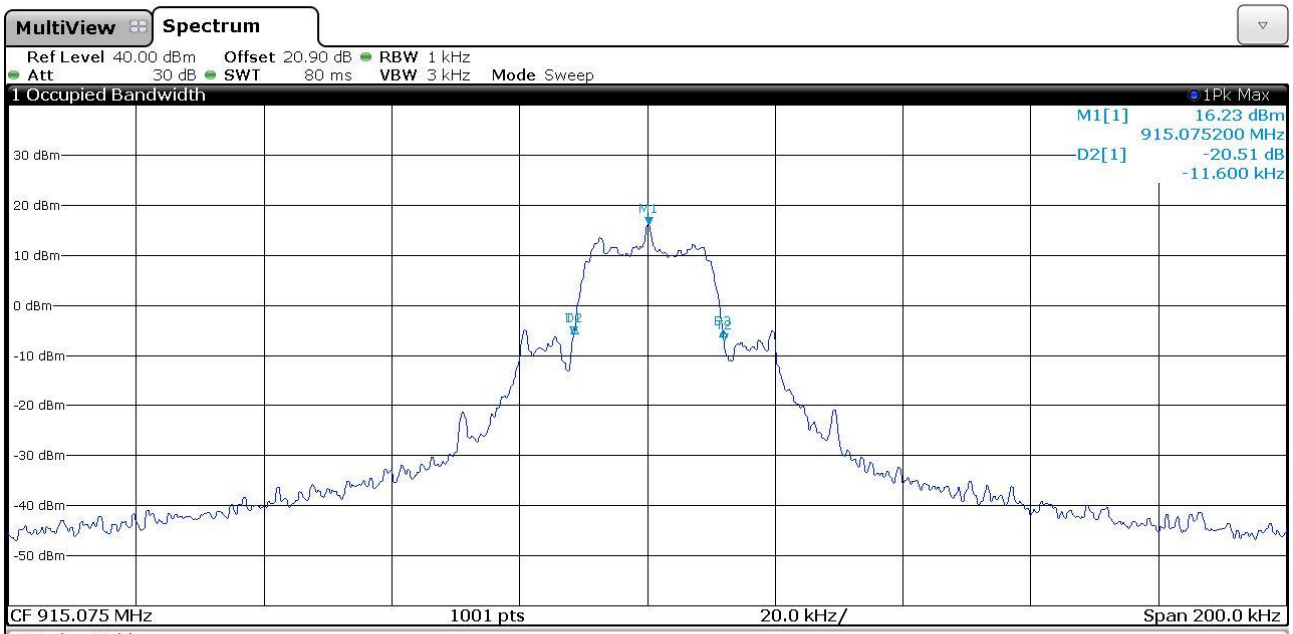

2 Marker Table

Type	Ref	Trc	X-Value	Y-Value	Function	Function Result
M1		1	**915.0752 MHz**	**16.23 dBm**	Occ Bw	**23.651276874 kHz**
T1		1	915.063406 MHz	-5.74 dBm	Occ Bw Centroid	915.075231793 MHz
T2		1	915.087057 MHz	-7.01 dBm	Occ Bw Freq Offset	231.793194652 Hz
D2	M1	1	**-11.6 kHz**	**-20.51 dB**		
D3	M1	1	**11.6 kHz**	**-21.18 dB**		

19032435

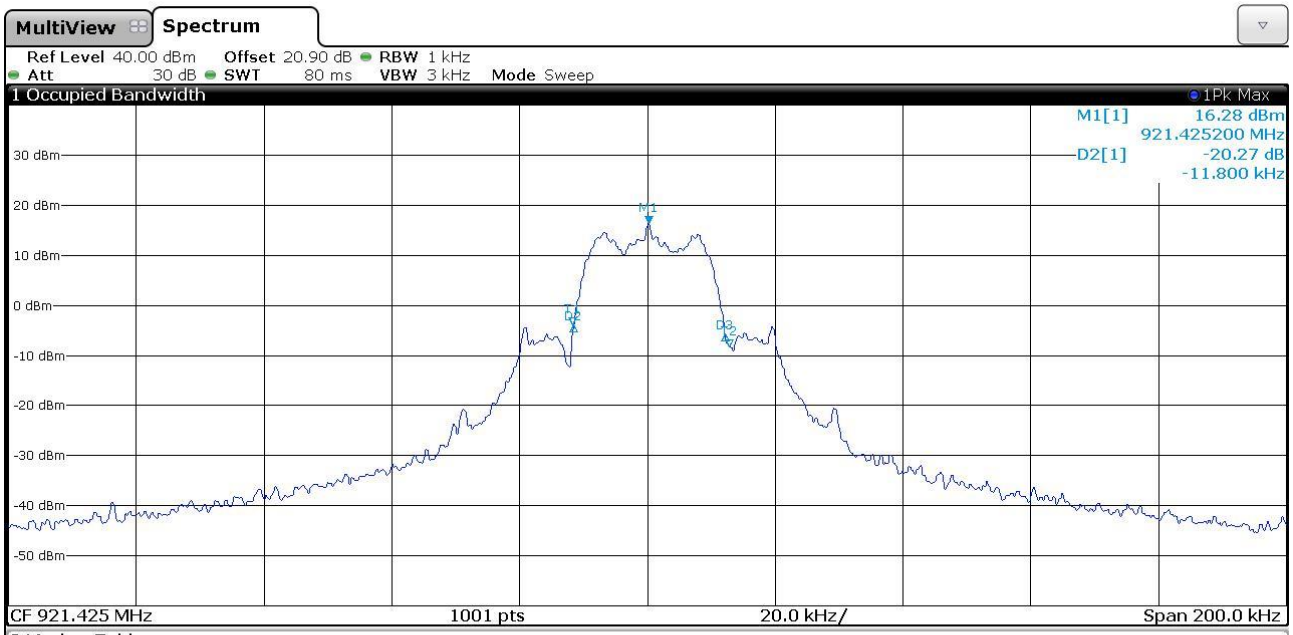

2 Marker Table

Type	Ref	Trc	X-Value	Y-Value	Function	Function Result
M1		1	**921.4252 MHz**	**16.28 dBm**	Occ Bw	**24.414766046 kHz**
T1		1	921.413339 MHz	-3.99 dBm	Occ Bw Centroid	921.425546514 MHz
T2		1	921.437754 MHz	-8.34 dBm	Occ Bw Freq Offset	546.513736963 Hz
D2	M1	1	**-11.8 kHz**	**-20.27 dB**		
D3	M1	1	**12.0 kHz**	**-22.02 dB**		

CMC Centro Misure Compatibilità S.r.l.

19032436

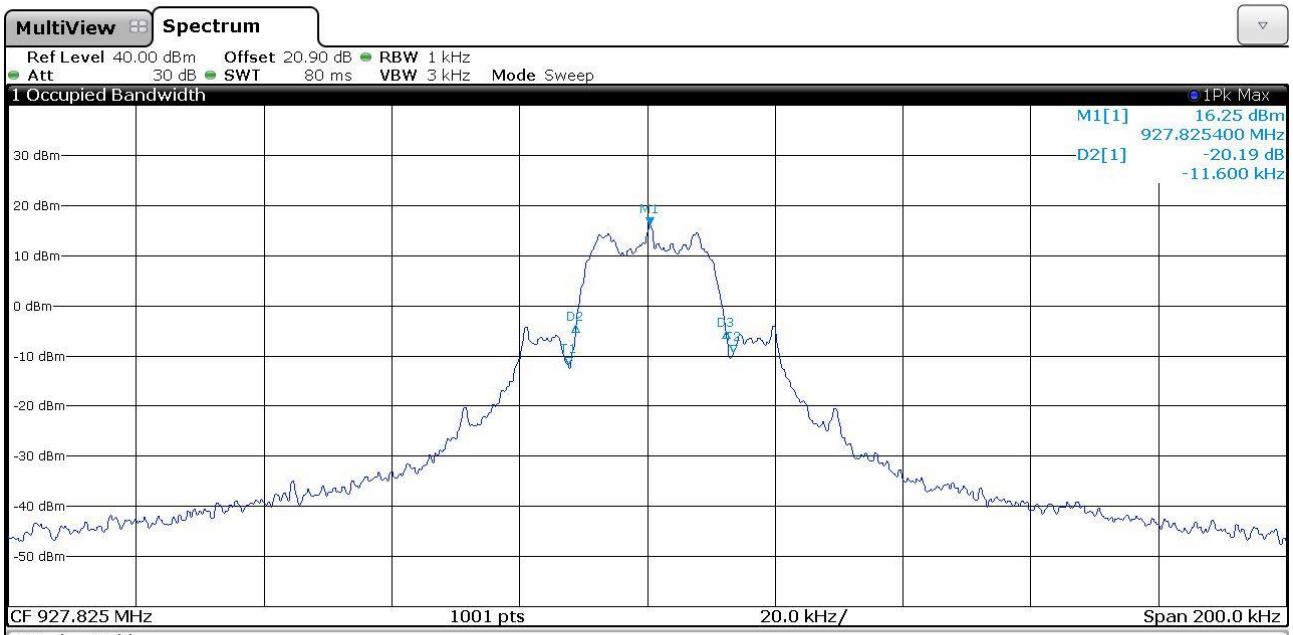

2 Marker Table

Type	Ref	Trc	X-Value	Y-Value	Function	Function Result
M1		1	**927.8254 MHz**	**16.25 dBm**	Occ Bw	**25.762482006 kHz**
T1		1	927.812667 MHz	-11.71 dBm	Occ Bw Centroid	927.825548579 MHz
T2		1	927.83843 MHz	-9.21 dBm	Occ Bw Freq Offset	548.579262972 Hz
D2	M1	1	**-11.6 kHz**	**-20.19 dB**		
D3	M1	1	**12.0 kHz**	**-21.34 dB**		

Result: The requirements are met

CMC Centro Misure Compatibilità S.r.l.

11.4 Channel separation

Test set-up and execution

- FCC Rules and Regulation; Titles 47 Part 15.247
- KDB 558074 D01 15.247 Meas Guidance v05 cl. 9 b)
- ANSI C63.10 cl. 7.8.2
- Internal procedure PM001
- See clause 4 of this test report

Test configuration and test method

Test site:
Laboratory

Auxiliary equipment:
See clause 4 of this test report

EUT exercising

See clause 4 of this test report

Test equipment used

CMC S295
Measurement uncertainty: See clause 7 of this test report

Test specification

See FCC Part 15.247

Environmental conditions

Temperature (°C)	*Atmospheric pressure (kPa)*	*Relative humidity (%)*
20	100	42

Acceptance limits: frequency hopping systems shall have hopping channel carrier frequencies separated by a minimum of 25 kHz or the 20 dB bandwidth of the hopping channel, whichever is greater. Alternatively, frequency hopping systems operating in the 2400–2483,5 MHz band may have hopping channel carrier frequencies that are separated by 25 kHz or two-thirds of the 20 dB bandwidth of the hopping channel, whichever is greater, provided the systems operate with an output power no greater than 125 mW

CMC Centro Misure Compatibilità S.r.l.

Setup

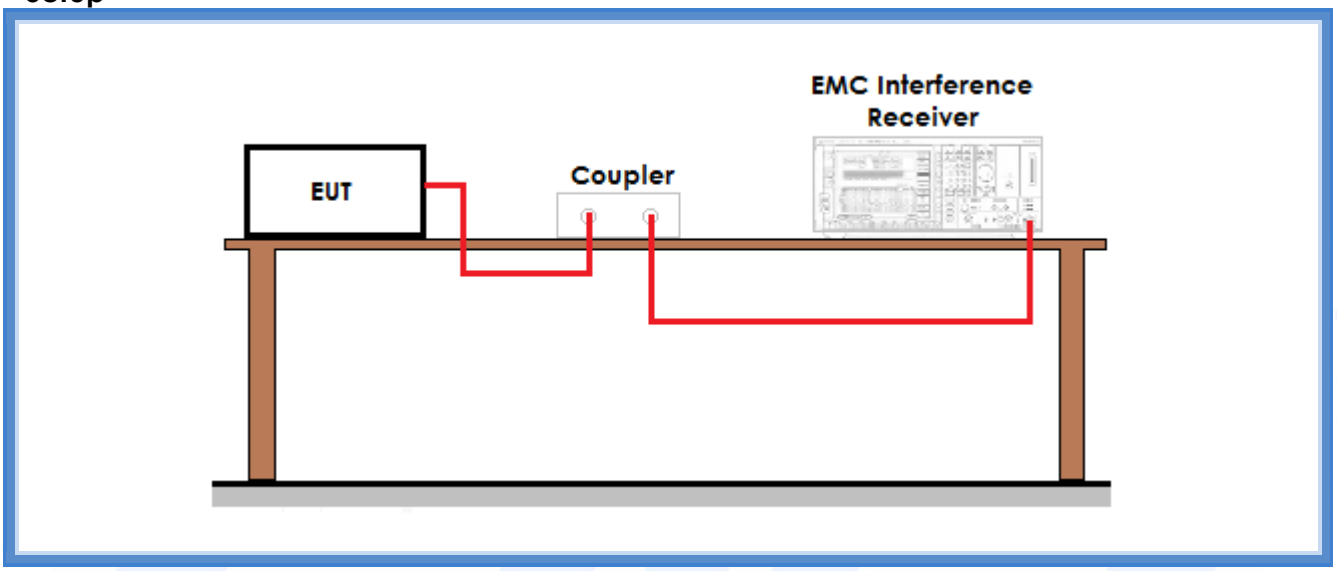

Result

Frequency band (MHz)	*Graphs*	*Channel separation (kHz)*	*Minimum channel separation required (kHz)*	*Results*
902 – 928	G19032440	200	25	Complies

Graphs

19032440

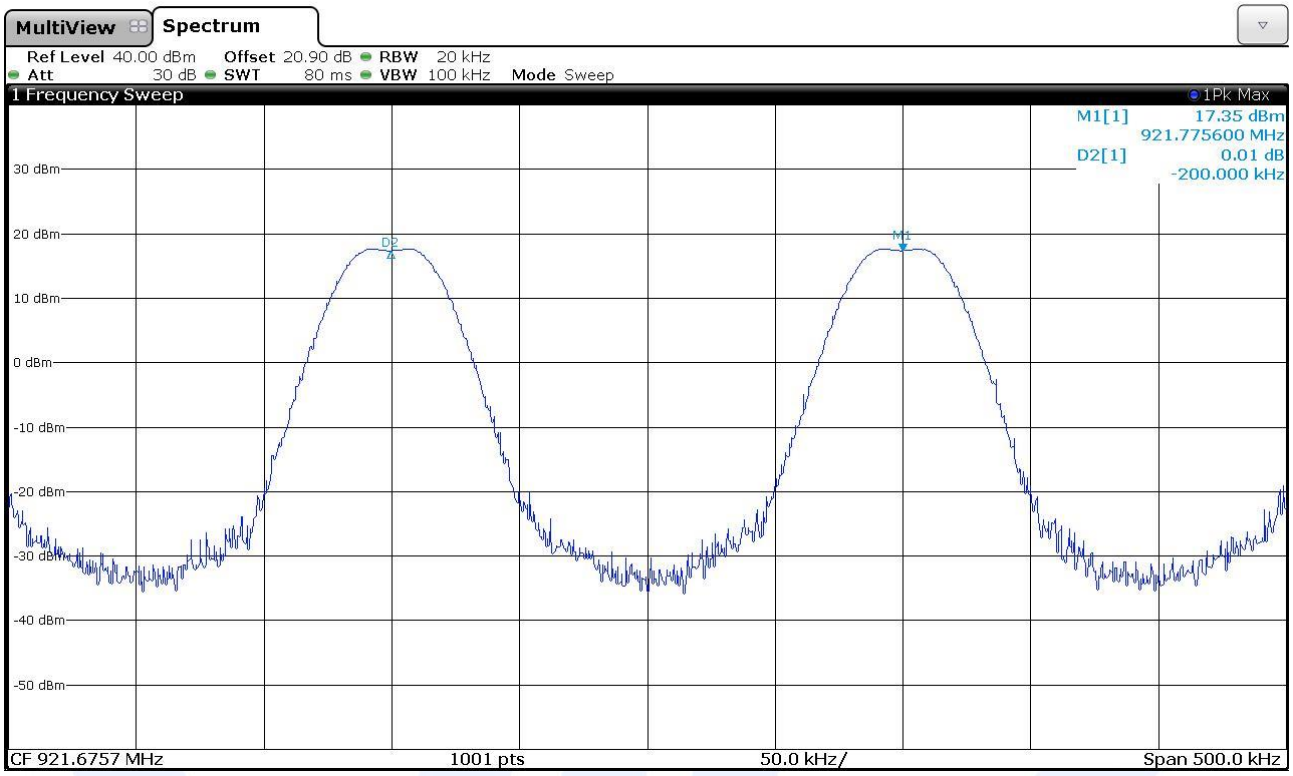

Result: The requirements are met

11.5 Number of hopping channels

Test set-up and execution

- FCC Rules and Regulation; Titles 47 Part 15.247
- KDB 558074 D01 15.247 Meas Guidance v05 cl. 9 b)
- ANSI C63.10 cl. 7.8.3
- Internal procedure PM001
- See clause 4 of this test report

Test configuration and test method

Test site:
Laboratory

Auxiliary equipment:
See clause 4 of this test report

EUT exercising

See clause 4 of this test report

Test equipment used

CMC S295
Measurement uncertainty: See clause 7 of this test report

Test specification

See FCC Part 15.247

Environmental conditions

Temperature (°C)	*Atmospheric pressure (kPa)*	*Relative humidity (%)*
20	100	42

Acceptance limits: for frequency hopping systems operating in the 902–928 MHz band: if the 20 dB bandwidth of the hopping channel is less than 250 kHz, the system shall use at least 50 hopping frequencies. If the 20 dB bandwidth of the hopping channel is 250 kHz or greater, the system shall use at least 25 hopping frequencies. Frequency hopping systems in the 2400–2483.5 MHz band shall use at least 15 channels.

CMC Centro Misure Compatibilità S.r.l.

Setup

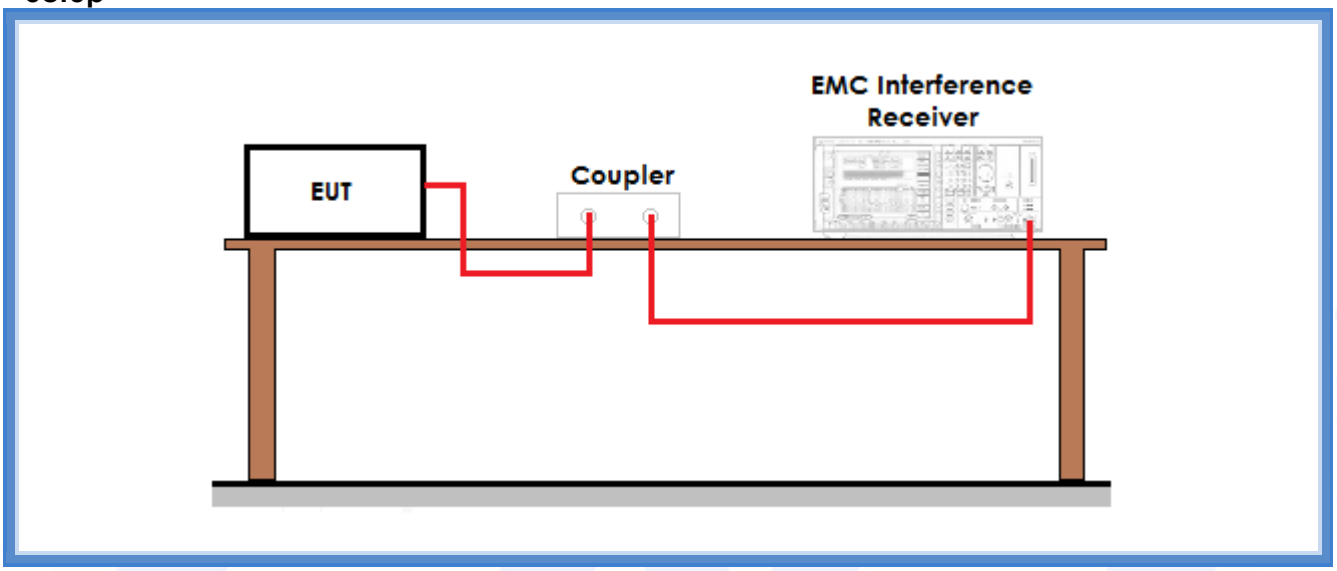

Result

Frequency band (MHz)	*Graphs*	*Number of hopping channels*	*Minimum number of hopping channels required*	*Results*
902 – 928	G19032441	64	50	Complies

Graphs

19032441

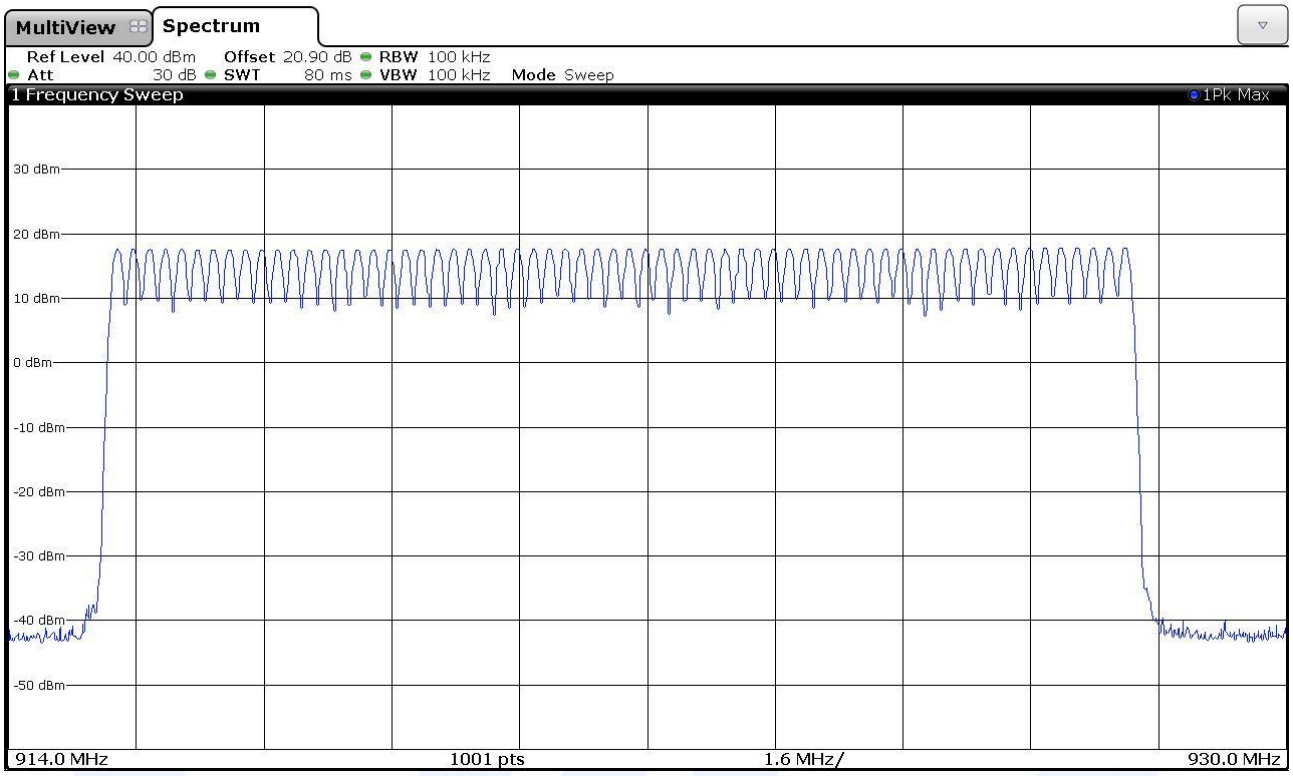

Result: The requirements are met

CMC Centro Misure Compatibilità S.r.l.

11.6 Time of occupancy

Test set-up and execution

- FCC Rules and Regulation; Titles 47 Part 15.247
- KDB 558074 D01 15.247 Meas Guidance v05 cl. 9 b)
- ANSI C63.10 cl. 7.8.4
- Internal procedure PM001
- See clause 4 of this test report

Test configuration and test method

Test site:
Laboratory

Auxiliary equipment:
See clause 4 of this test report

EUT exercising

See clause 4 of this test report

Test equipment used

CMC S295
Measurement uncertainty: See clause 7 of this test report

Test specification

See FCC Part 15.247

Environmental conditions

Temperature (°C)	*Atmospheric pressure (kPa)*	*Relative humidity (%)*
22	100	42

Acceptance limits:
For frequency hopping systems operating in the 902–928 MHz band: if the 20 dB bandwidth of the hopping channel is less than 250 kHz, the system shall use at least 50 hopping frequencies and the average time of occupancy on any frequency shall not be greater than 0,4 seconds within a 20 second period; if the 20 dB bandwidth of the hopping channel is 250 kHz or greater, the system shall use at least 25 hopping frequencies and the average time of occupancy on any frequency shall not be greater than 0,4 seconds within a 10 second period

CMC Centro Misure Compatibilità S.r.l.

Setup

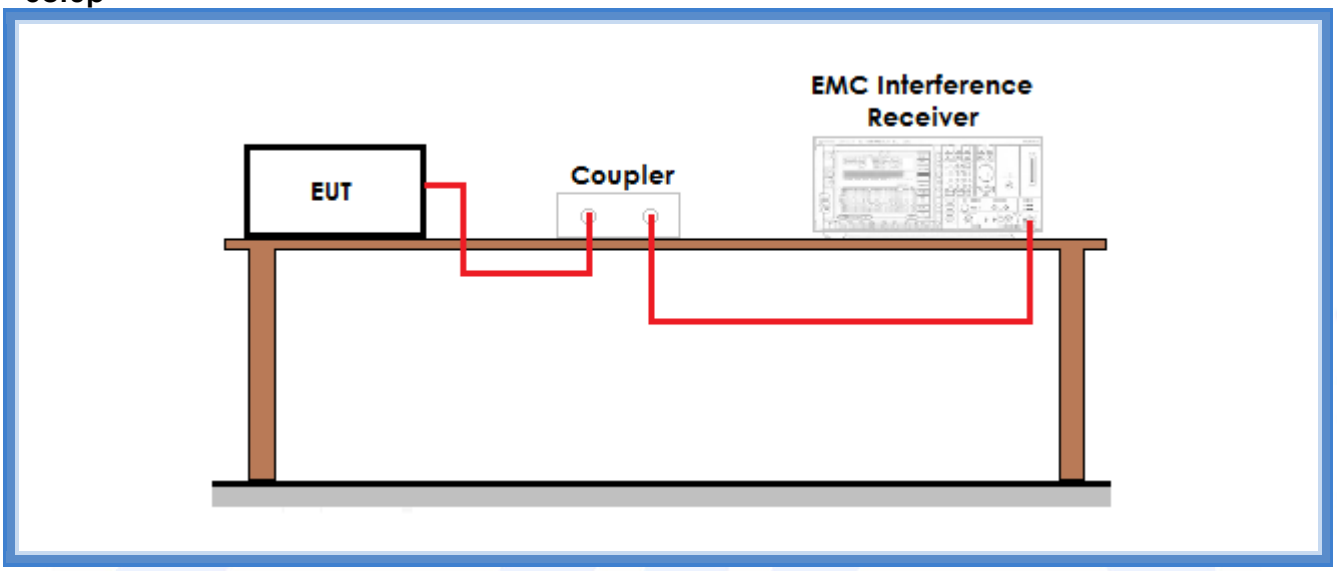

Result

Frequency (MHz)	*Graphs*	*Dwell time (ms)*
921,425	G19032445	20,79

Frequency (MHz)	*Graphs*	*Number of transmissions*	*Period*
921,425	G19032442	7	20 s

Remarks: only the highest peaks have been considered. The lowest peaks are due to the auxiliary receiver unit

Time of occupancy (Dwell time x Nr. transmissions)	***Maximum allowed time of occupancy***	***Results***
145,53 ms	400 ms	Complies

CMC Centro Misure Compatibilità S.r.l.

Graphs

19032442

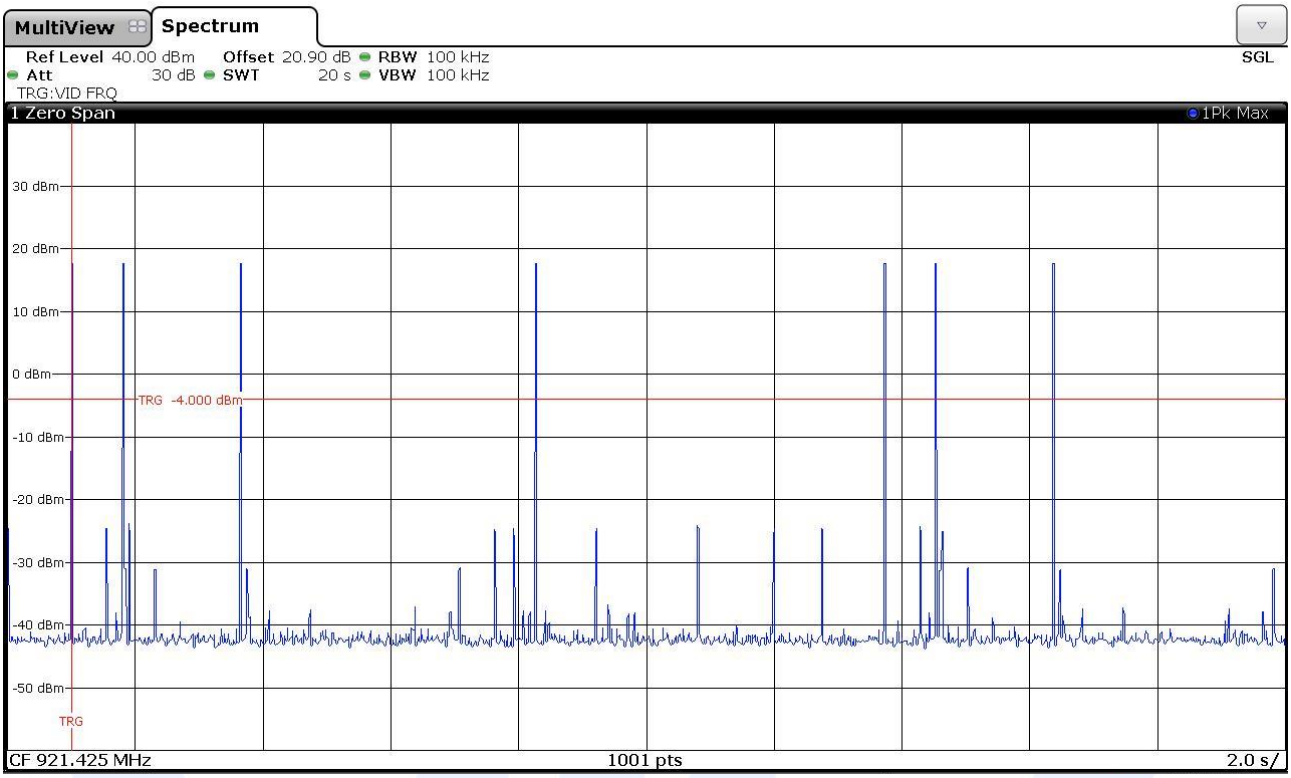

19032445

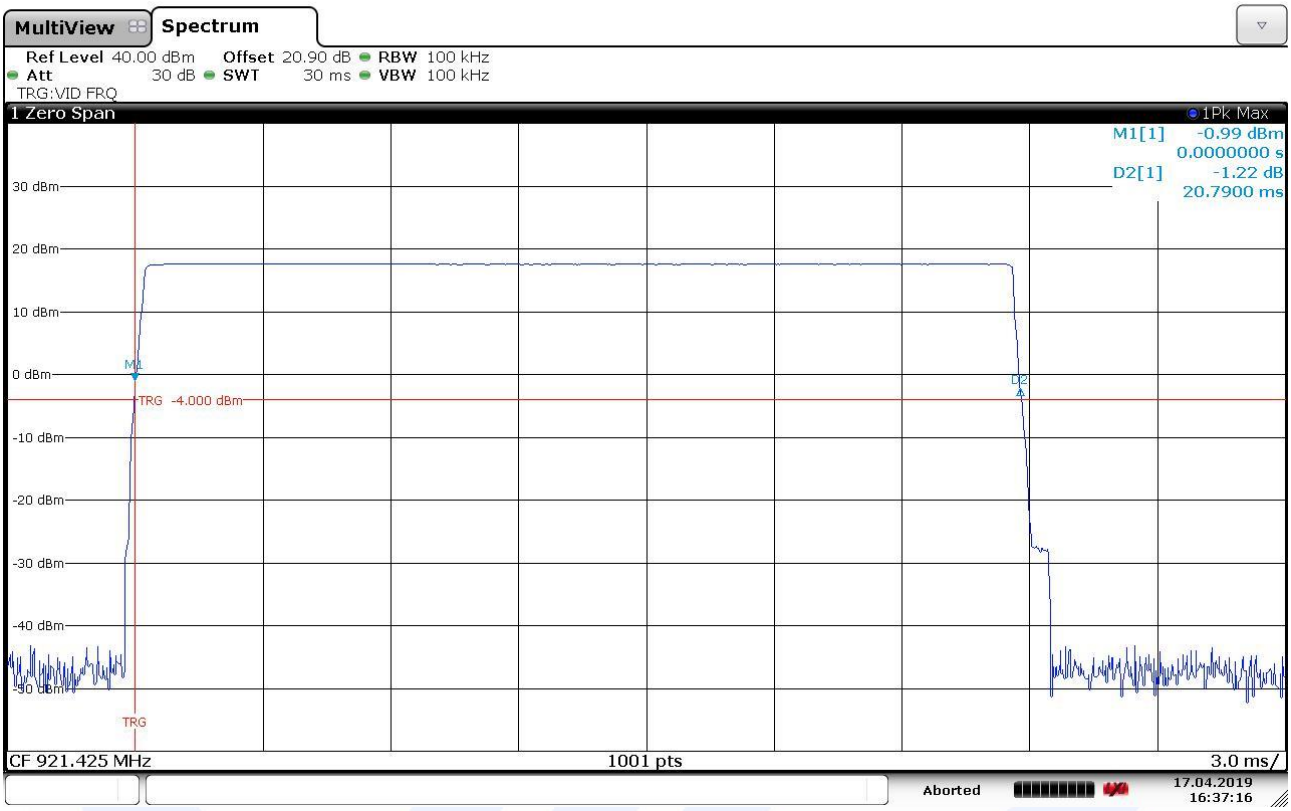

Result: The requirements are met

CMC Centro Misure Compatibilità S.r.l.

11.7 Band edge

Test set-up and execution

- FCC Rules and Regulation; Titles 47 Part 15.247
- ANSI C63.10 cl. 7.8.6
- Internal procedure PM001
- See clause 4 of this test report

Test configuration and test method

Test site:
Laboratory

Auxiliary equipment:
See clause 4 of this test report

EUT exercising

See clause 4 of this test report

Test equipment used

CMC S295
Measurement uncertainty: See clause 7 of this test report

Test specification

See FCC Part 15.247

Environmental conditions

Temperature (°C)	*Atmospheric pressure (kPa)*	*Relative humidity (%)*
22	100	45

Acceptance limits: operation within the band 902 – 928 MHz

CMC Centro Misure Compatibilità S.r.l.

Setup

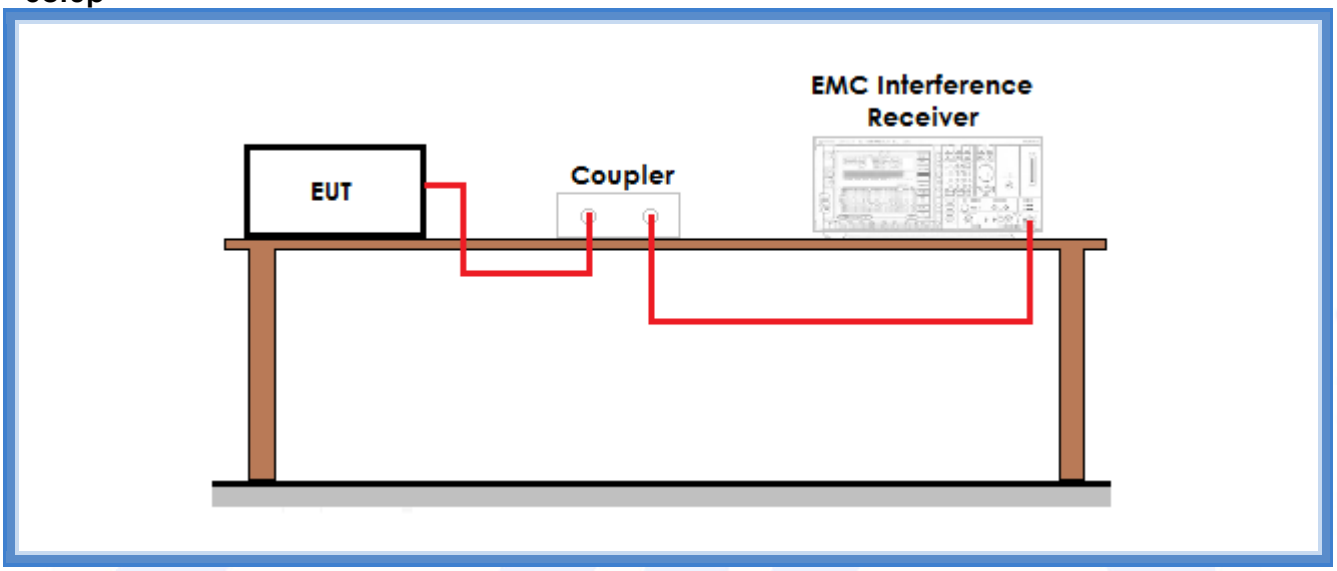

Result

Frequency (MHz)	*Graph(s) – Hopping*	*Results*	
915,075	G19032437	F_L: 914,936 MHz	Complies
	G19032438		
927,825	G19032439	F_H: 927,963 MHz	Complies

Frequency (MHz)	*Graph(s) – No hopping*	*Results*	
915,075	G19032431	F_L: 914,937 MHz	Complies
	G19032432		
927,825	G19032433	F_H: 927,964 MHz	Complies

CMC Centro Misure Compatibilità S.r.l.

Graphs

19032431

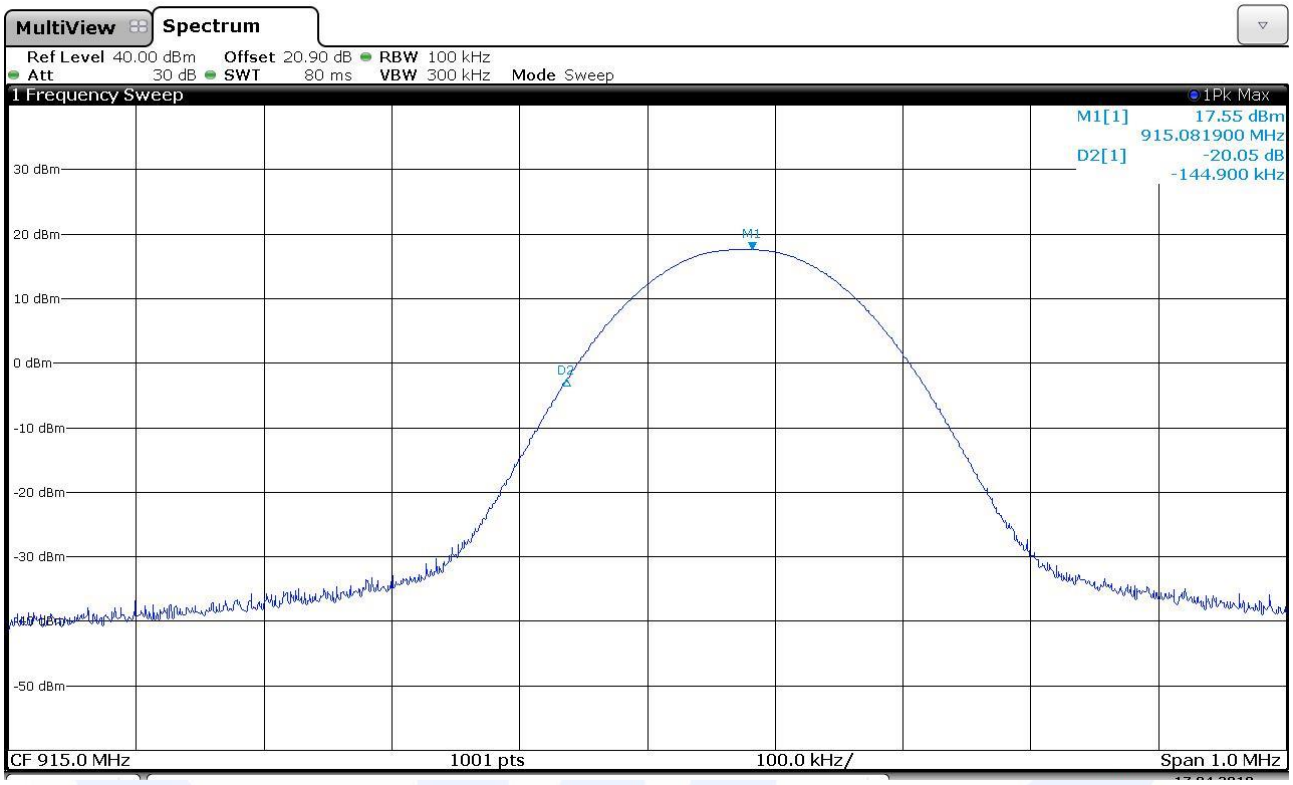

19032432

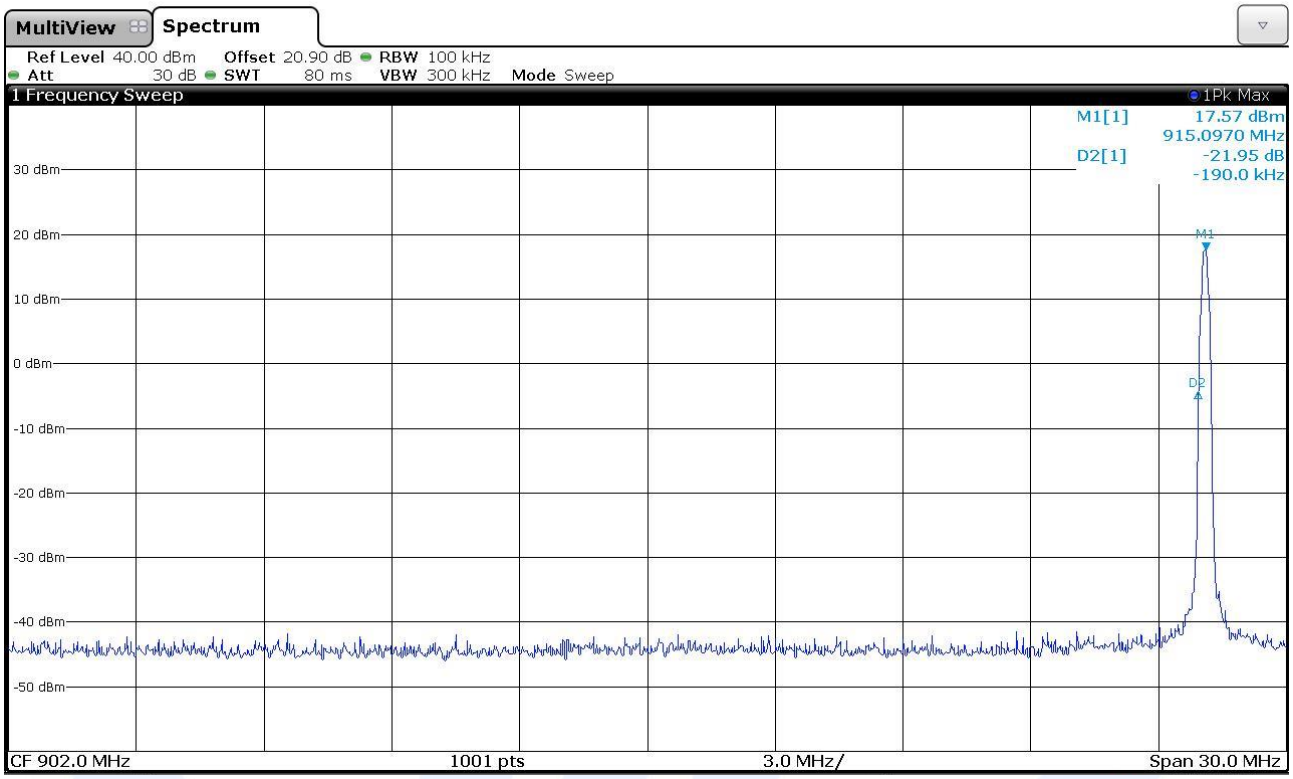
MultiView
Spectrum
Ref Level 40.00 dBm Offset 20.90 dB RBW 100 kHz
Att 30 dB SWT 80 ms VBW 300 kHz Mode Sweep
1 Frequency Sweep
1Pk Max
M1[1] 17.57 dBm
915.0970 MHz
D2[1] -21.95 dB
-190.0 kHz
30 dBm
20 dBm
10 dBm
0 dBm
-10 dBm
-20 dBm
-30 dBm
-40 dBm
-50 dBm
M1
D2
CF 902.0 MHz
1001 pts
3.0 MHz/
Span 30.0 MHz

19032433

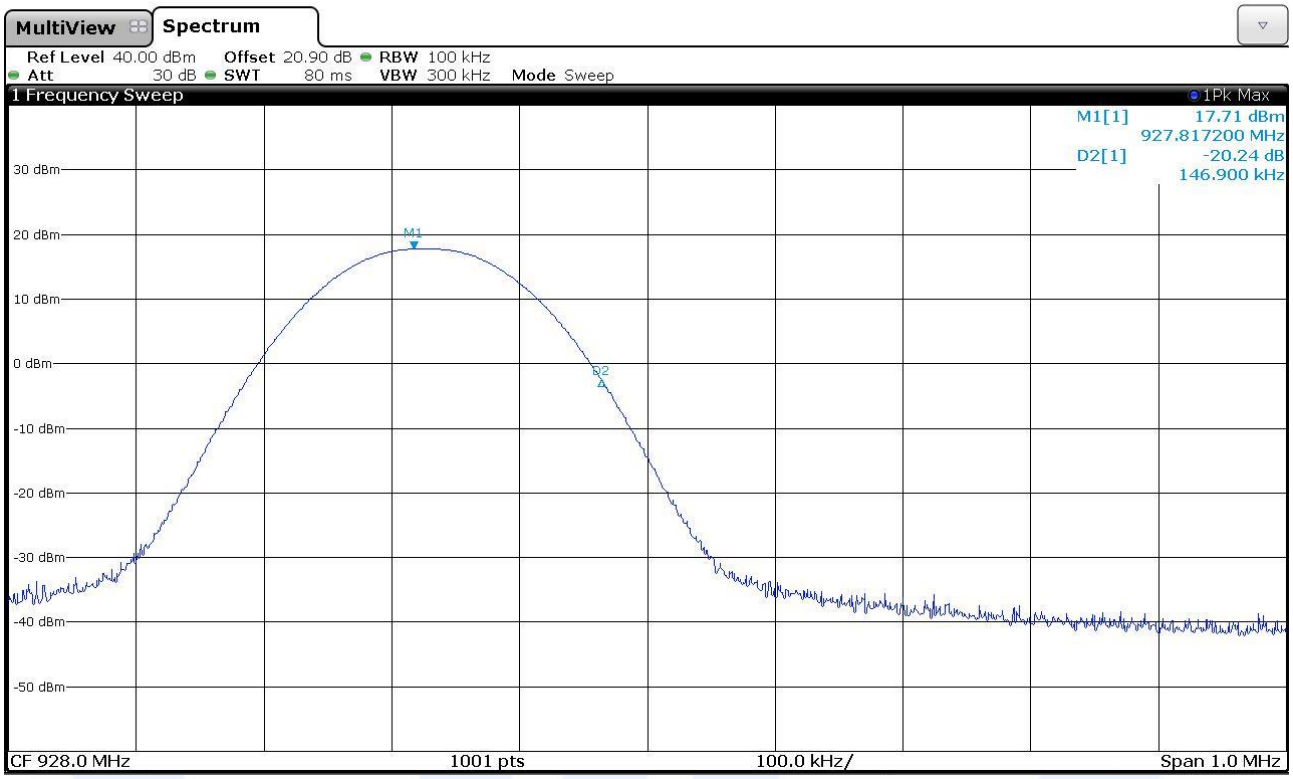
MultiView
Spectrum
Ref Level 40.00 dBm Offset 20.90 dB RBW 100 kHz
Att 30 dB SWT 80 ms VBW 300 kHz Mode Sweep
1 Frequency Sweep
1Pk Max
M1[1] 17.71 dBm
927.817200 MHz
D2[1] -20.24 dB
146.900 kHz
30 dBm
20 dBm
10 dBm
0 dBm
-10 dBm
-20 dBm
-30 dBm
-40 dBm
-50 dBm
M1
D2
CF 928.0 MHz
1001 pts
100.0 kHz/
Span 1.0 MHz

19032437

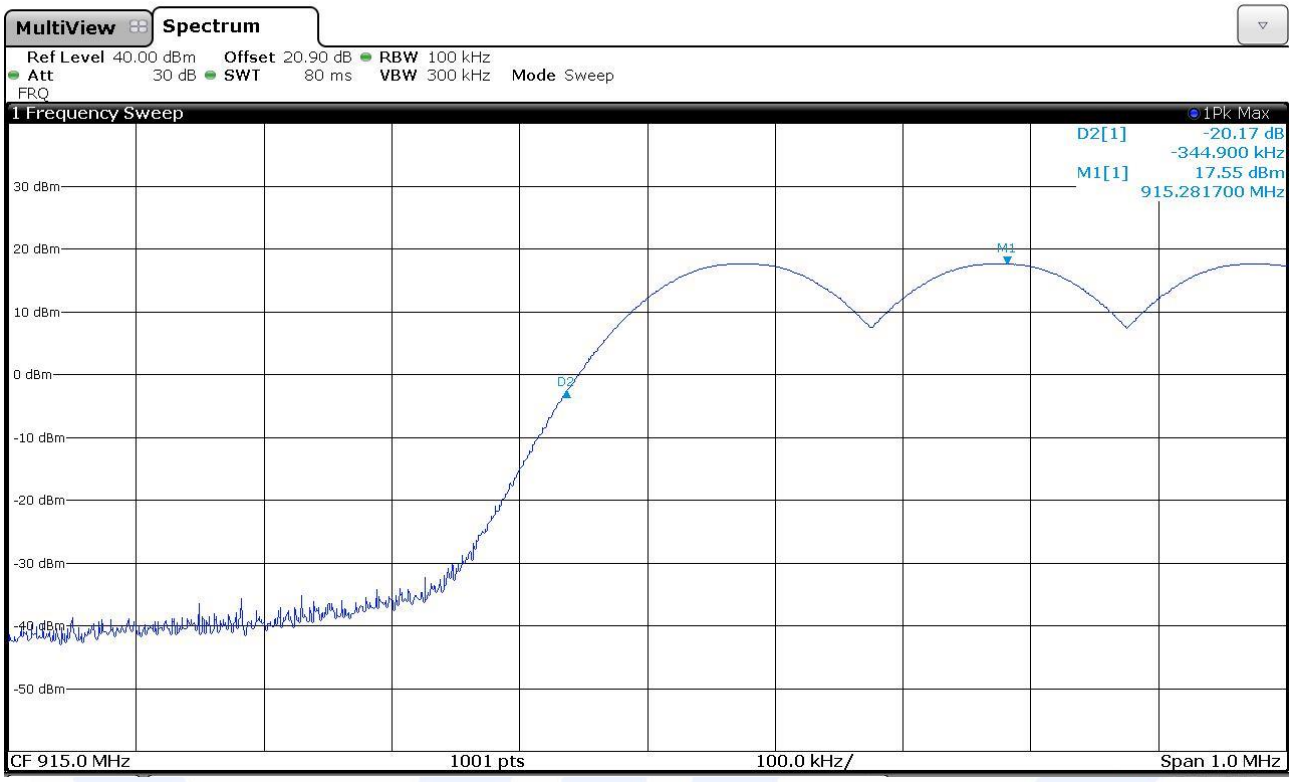
MultiView
Spectrum
Ref Level 40.00 dBm Offset 20.90 dB RBW 100 kHz
Att 30 dB SWT 80 ms VBW 300 kHz Mode Sweep
FRQ
1 Frequency Sweep
1Pk Max
D2[1] -20.17 dB
-344.900 kHz
M1[1] 17.55 dBm
915.281700 MHz
30 dBm
20 dBm
10 dBm
0 dBm
-10 dBm
-20 dBm
-30 dBm
-40 dBm
-50 dBm
M1
D2
CF 915.0 MHz
1001 pts
100.0 kHz/
Span 1.0 MHz

19032438

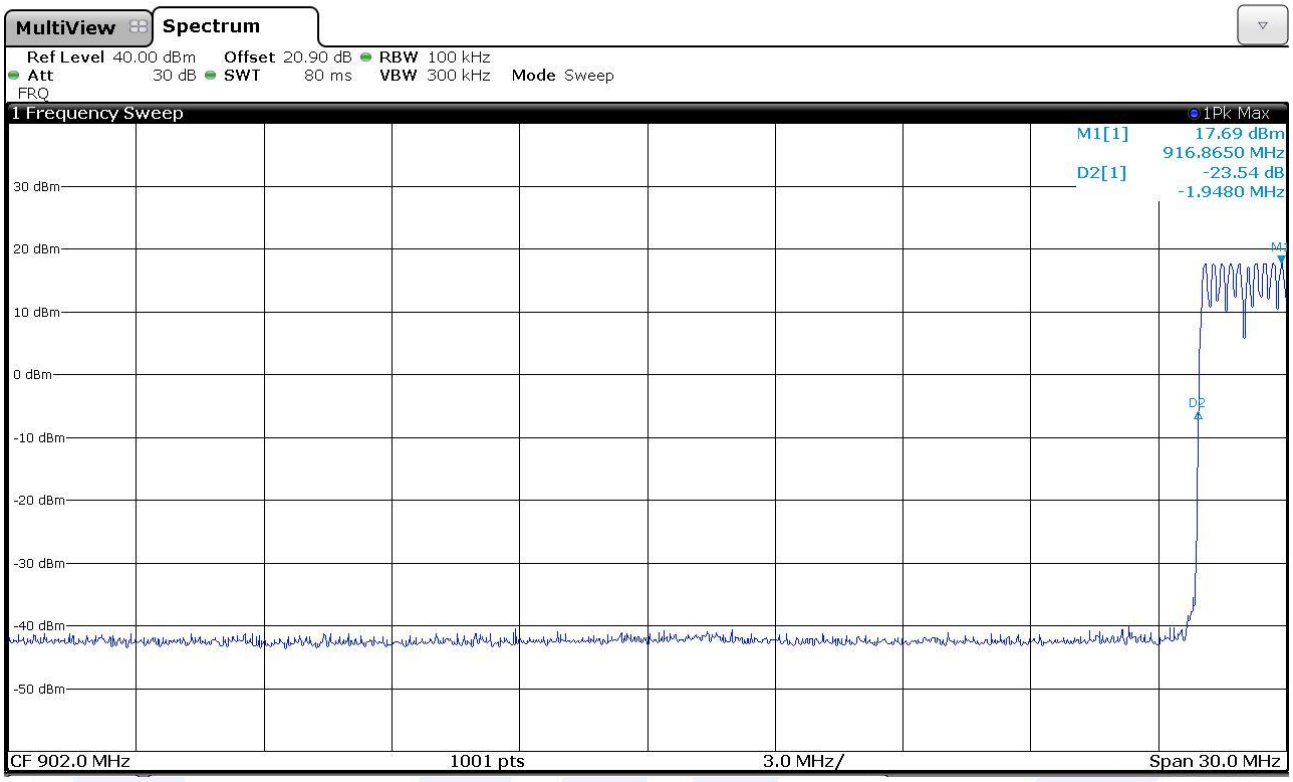
MultiView
Spectrum
Ref Level 40.00 dBm Offset 20.90 dB RBW 100 kHz
Att 30 dB SWT 80 ms VBW 300 kHz Mode Sweep
FRQ
1 Frequency Sweep
1Pk Max
M1[1] 17.69 dBm
916.8650 MHz
D2[1] -23.54 dB
-1.9480 MHz
30 dBm
20 dBm
10 dBm
0 dBm
-10 dBm
-20 dBm
-30 dBm
-40 dBm
-50 dBm
CF 902.0 MHz
1001 pts
3.0 MHz/
Span 30.0 MHz

19032439

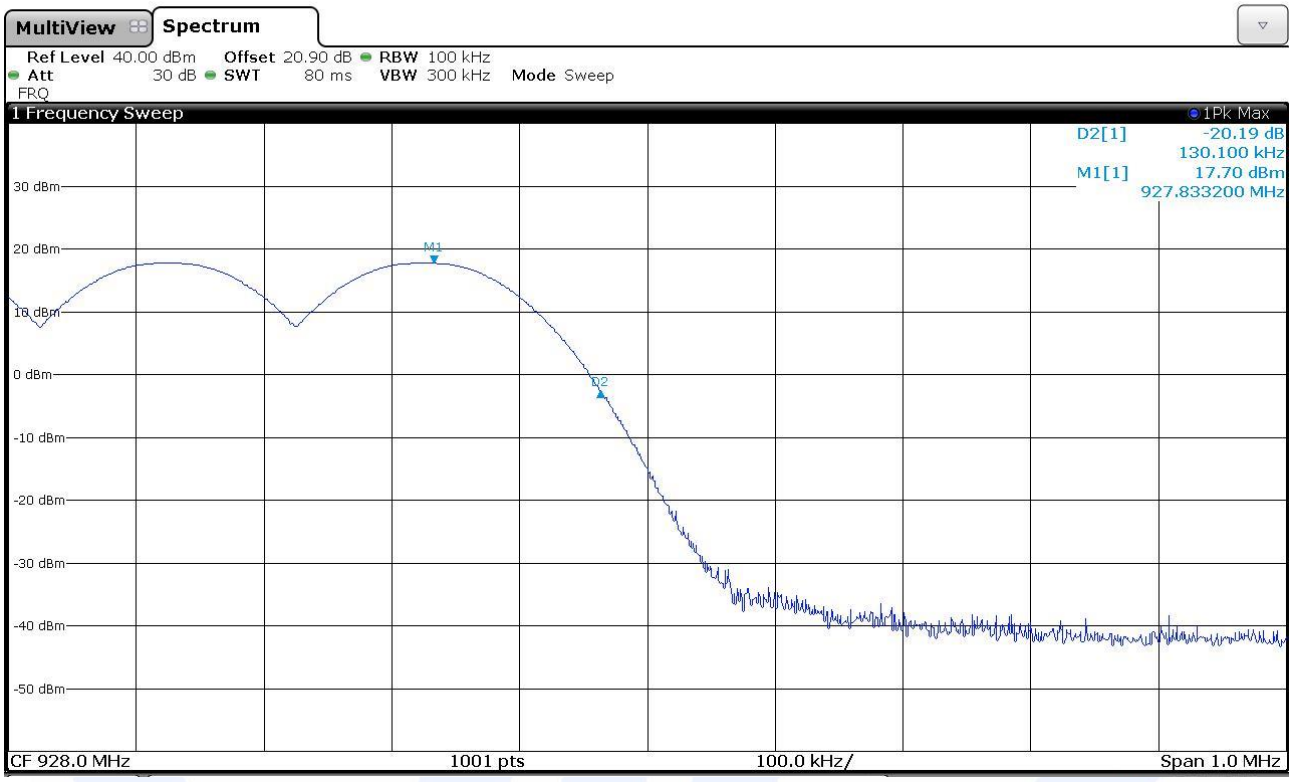

Result: The requirements are met

11.8 Peak Output Power

Test set-up and execution

- FCC Rules and Regulation; Titles 47 Part 15.247
- KDB 558074 D01 15.247 Meas Guidance v05 cl. 2.2
- ANSI C63.10 cl. 7.8.5
- Internal procedure PM001
- See clause 4 of this test report

Test configuration and test method

Test site:
Laboratory

Auxiliary equipment:
See clause 4 of this test report

EUT exercising

See clause 4 of this test report

Test equipment used

CMC S295
Measurement uncertainty: See clause 7 of this test report

Test specification

Port: antenna

Environmental conditions

Temperature (°C)	*Atmospheric pressure (kPa)*	*Relative humidity (%)*
20	100	45

For frequency hopping systems operating in the 2400–2483,5 MHz band employing at least 75 non-overlapping hopping channels, and all frequency hopping systems in the 5725–5850 MHz band: 1 watt. For all other frequency hopping systems in the 2400–2483,5 MHz band: 0,125 watts.
For frequency hopping systems operating in the 902–928 MHz band: 1 watt for systems employing at least 50 hopping channels; and, 0,25 watts for systems employing less than 50 hopping channels, but at least 25 hopping channels.

CMC Centro Misure Compatibilità S.r.l.

Setup

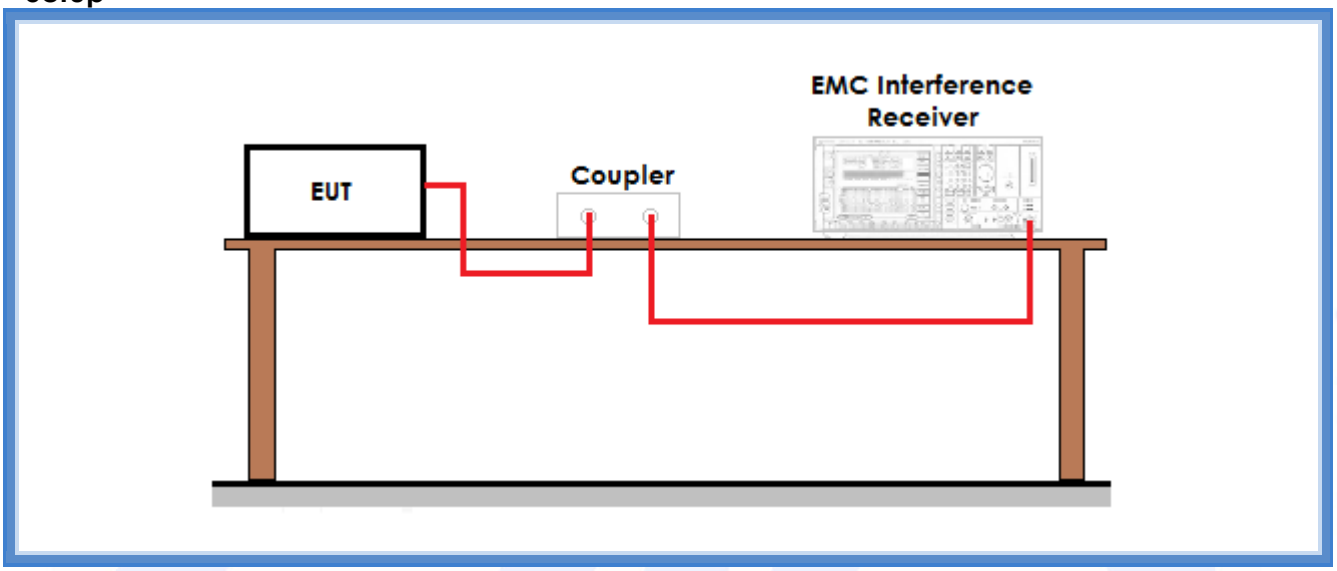

Result

Frequency (MHz)	*Graphs*	*Conducted measured level (dBm)*	*Conducted power level (mW)*	*Limit (mW)*	*Verdict*	*Calculated radiated level @ 3 m (dBµV/m)*
915,075	G19032430	17,55	56,89	1000	Pass	114,78
921,425	G19032429	17,63	57,94	1000	Pass	114,86
927,825	G19032428	17,72	59,16	1000	Pass	114,95

CMC Centro Misure Compatibilità S.r.l.

Graphs

19032428

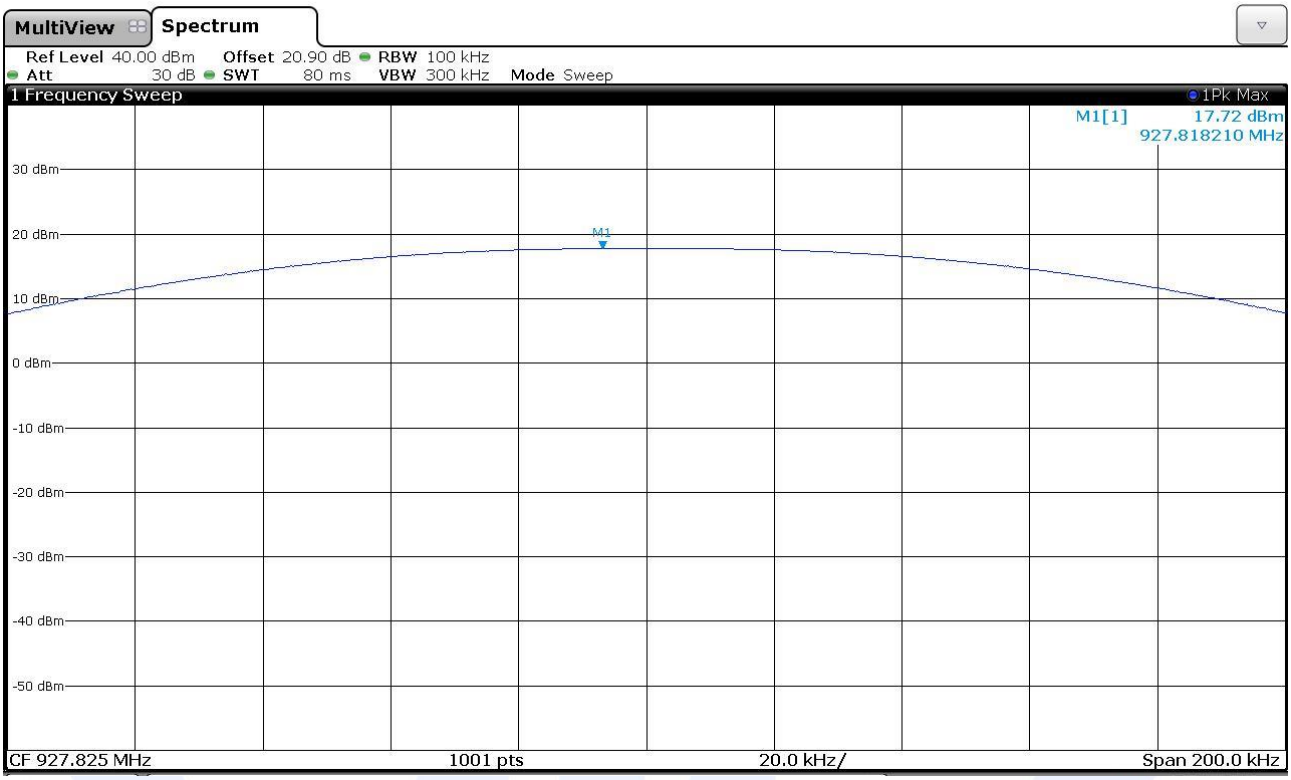

19032429

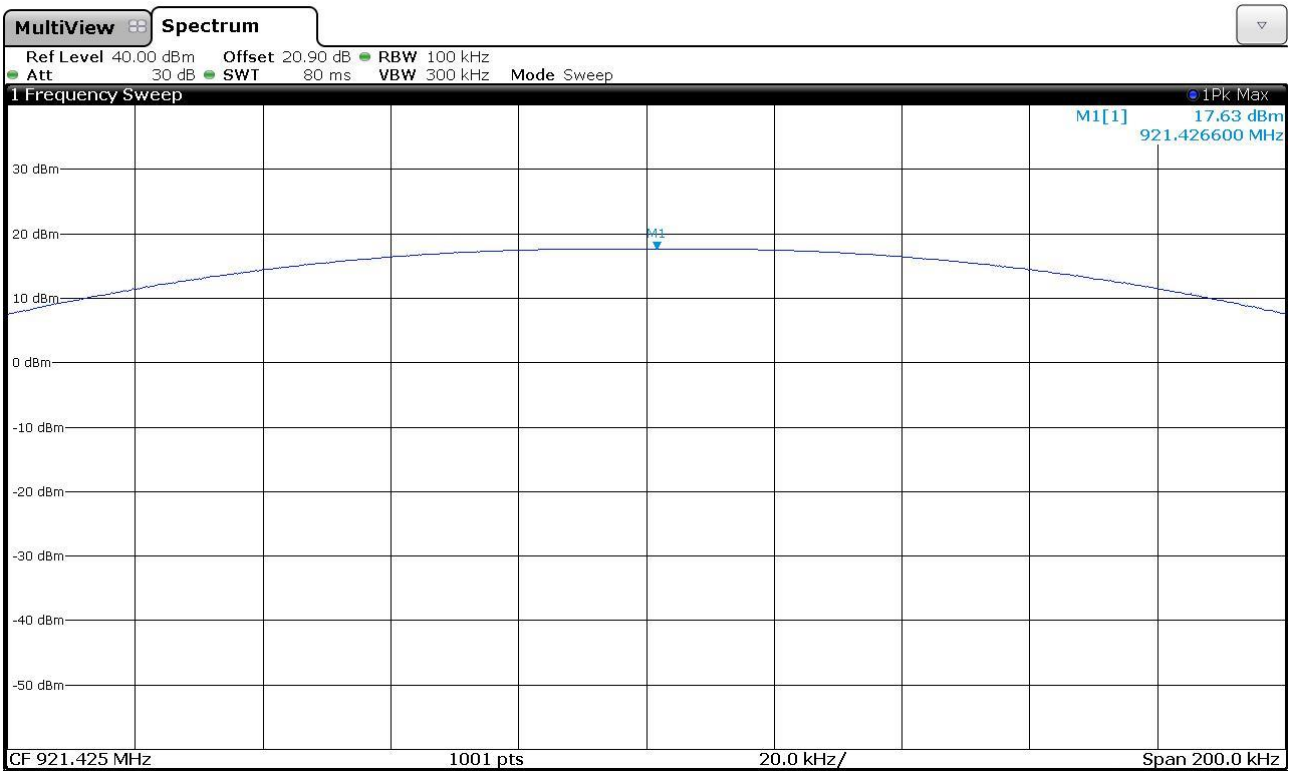

CMC Centro Misure Compatibilità S.r.l.

19032430

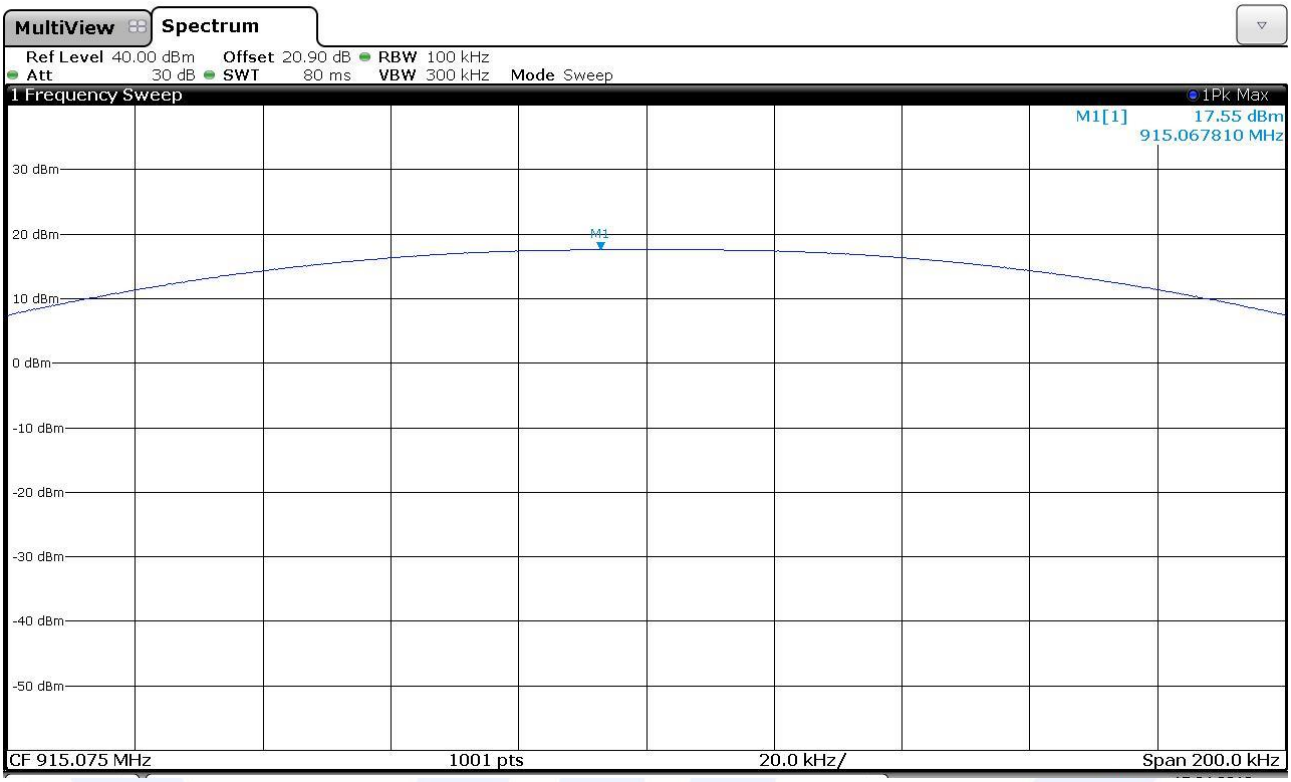

Result: The requirements are met

11.9 Spurious Emission

Test set-up and execution

- FCC Rules and Regulation; Titles 47 Part 15.209
- Internal procedure PM001
- See clause 4 of this test report

Test configuration and test method

Test site:
Semi-anechoic chamber

Auxiliary equipment:
See clause 4 of this test report

EUT exercising

See clause 4 of this test report

Test equipment used

CMC S108, CMC S136, CMC S164
Measurement uncertainty: See clause 7 of this test report

Test specification

Port: Enclosure
Frequency range: 0,009 MHz – 10000 MHz
Antenna polarization: Horizontal (H) – Vertical (V)
10 m for frequencies ≤ 30 MHz
3 m for frequencies > 30 MHz

Environmental conditions

Temperature (°C)	*Atmospheric pressure (kPa)*	*Relative humidity (%)*
22	100	45

Acceptance limits

Acceptance limits for emissions in restricted frequency bands		
Frequency (MHz)	*AV limits [dB(µV/m)]*	*Peak limits [dB(µV/m)]*
> 1000	54	74

CMC Centro Misure Compatibilità S.r.l.

The restricted frequency bands are listed in the following table

MHz	MHz	MHz	GHz
0,090 – 0,110	16,42 – 16,423	399,9 – 410	4,5 – 5,15
0,495 – 0,505	16,69475 – 16,69525	608 – 614	5,35 – 5,46
2,1735 – 2,1905	16,80425 – 16,80475	960 – 1240	7,25 – 7,75
4,125 – 4,128	25,5 – 25,67	1300 – 1427	8,025 – 8,5
4,17725 – 4,17775	37,5 – 38,25	1435 – 1626,5	9,0 – 9,2
4,20725 – 4,20775	73 – 74,6	1645,5 – 1646,5	9,3 – 9,5
6,215 – 6,218	74,8 – 75,2	1660 – 1710	10,6 – 12,7
6,26775 – 6,26825	108 – 121,94	1718,8 – 1722,2	13,25 – 13,4
6,31175 – 6,31225	123 – 138	2200 – 2300	14,47 – 14,5
8,291 – 8,294	149,9 – 150,05	2310 – 2390	15,35 – 16,2
8,362 – 8,366	156,52475 – 156,52525	2483,5 – 2500	17,7 – 21,4
8,37625 – 8,38675	156,7 – 156,9	2690 – 2900	22,01 – 23,12
8,41425 – 8,41475	162,0125 – 167,17	3260 – 3267	23,6 – 24,0
12,29 – 12,293	167,72 – 173,2	3332 – 3339	31,2 – 31,8
12,51975 – 12,52025	240 – 285	3345,8 – 3358	36,43 – 36,5
12,57675 – 12,57725	322 – 335,4	3600 – 4400	Above 38,6
13,36 – 13,41			

Acceptance limits for emissions in non-restricted frequency bands
In any 100 kHz bandwidth outside the frequency band in which the spread spectrum or digitally modulated intentional radiator is operating, the radio frequency power that is produced by the intentional radiator shall be at least 20 dB below that in the 100 kHz bandwidth within the band that contains the highest level of the desired power, based on either an RF conducted or a radiated measurement, provided the transmitter demonstrates compliance with the peak conducted power limits.

CMC Centro Misure Compatibilità S.r.l.

Setup

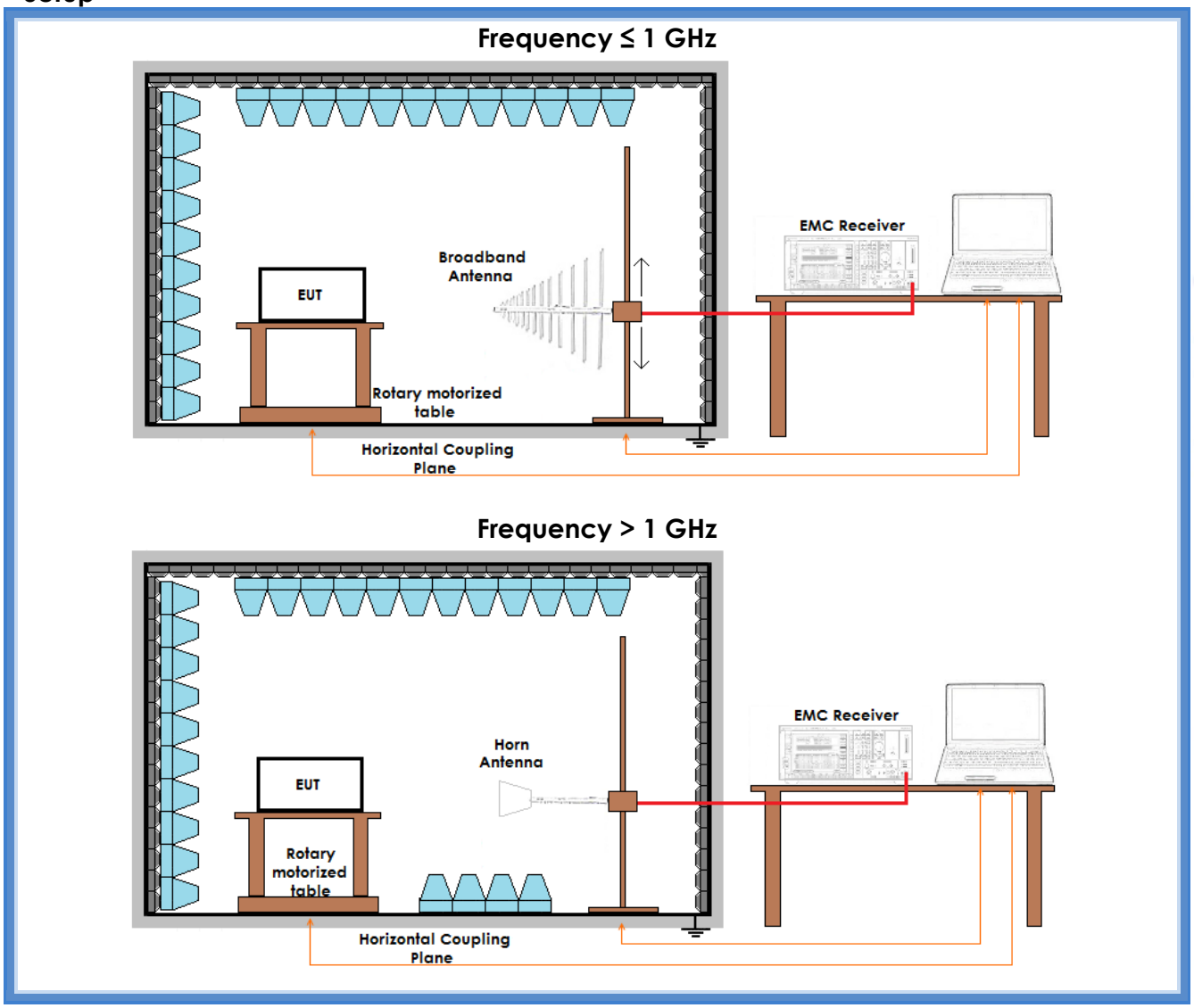

CMC Centro Misure Compatibilità S.r.l.

Result – AV detector

Harmonic	Lowest channel		Medium channel		Highest channel		Results
	Level (dBµV/m)	Limits (dBµV/m)	Level (dBµV/m)	Limits (dBµV/m)	Level (dBµV/m)	Limits (dBµV/m)	
II	43,11	54,00	39,88	54,00	40,07	54,00	Complies
III	47,06	54,00	46,45	54,00	46,62	54,00	Complies
IV	More than 20 dB below limit	54,00	More than 20 dB below limit	54,00	37,69	54,00	Complies
V	36,26	54,00	36,35	54,00	35,14	54,00	Complies
VI	More than 20 dB below limit	54,00	More than 20 dB below limit	54,00	More than 20 dB below limit	54,00	Complies
VII	More than 20 dB below limit	54,00	More than 20 dB below limit	54,00	More than 20 dB below limit	54,00	Complies
VIII	More than 20 dB below limit	54,00	More than 20 dB below limit	54,00	More than 20 dB below limit	54,00	Complies
IX	More than 20 dB below limit	54,00	More than 20 dB below limit	54,00	More than 20 dB below limit	54,00	Complies
X	44,11	54,00	44,35	54,00	44,25	54,00	Complies

Remarks: EUT was tested in 3 orthogonal planes. The results in this table show the highest values. No spurious other then harmonics have been found. The results have been extrapolated to the specified distance using an extrapolation factor. For all harmonics it was considered the limit of 54 dBµV/m as a worse case.

CMC Centro Misure Compatibilità S.r.l.

Result – Peak detector

Harmonic	*Lowest channel*		*Medium channel*		*Highest channel*		*Results*
	Level (dBµV/m)	*Limits (dBµV/m)*	*Level (dBµV/m)*	*Limits (dBµV/m)*	*Level (dBµV/m)*	*Limits (dBµV/m)*	
II	49,19	74,00	48,16	74,00	48,56	74,00	Complies
III	57,65	74,00	58,21	74,00	57,78	74,00	Complies
IV	More than 20 dB below limit	74,00	More than 20 dB below limit	74,00	45,24	74,00	Complies
V	46,45	74,00	More than 20 dB below limit	74,00	More than 20 dB below limit	74,00	Complies
VI	More than 20 dB below limit	74,00	More than 20 dB below limit	74,00	More than 20 dB below limit	74,00	Complies
VII	More than 20 dB below limit	74,00	More than 20 dB below limit	74,00	More than 20 dB below limit	74,00	Complies
VIII	More than 20 dB below limit	74,00	More than 20 dB below limit	74,00	More than 20 dB below limit	74,00	Complies
IX	More than 20 dB below limit	74,00	More than 20 dB below limit	74,00	More than 20 dB below limit	74,00	Complies
X	56,15	74,00	56,11	74,00	More than 20 dB below limit	74,00	Complies

Remarks: EUT was tested in 3 orthogonal planes. The results in this table show the highest values. No spurious other then harmonics have been found. The results have been extrapolated to the specified distance using an extrapolation factor. For all harmonics it was considered the limit of 74 dBµV/m as a worse case.

Result: The requirements are met

CMC Centro Misure Compatibilità S.r.l.