Telit Sat 551

Car Kit for Telit Sat 550

Installation and Operation Guide

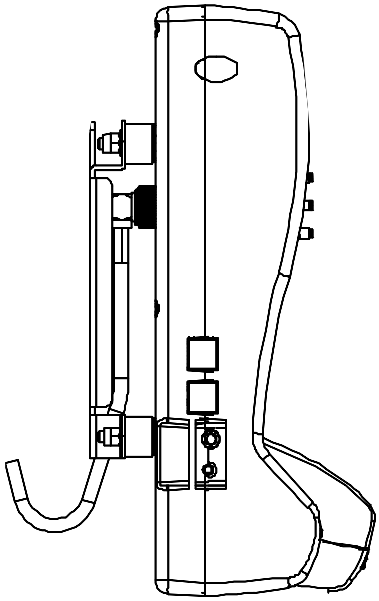

Telit

Telit

Mobile Terminals SpA

DECLARATION OF CONFORMITY

We,

Telit Mobile Terminals SpA

Of:

V.le Stazione di Prosecco 5/b
34010 Sgonico TS
Italy

declare under our sole responsibility that the product

Telit Dual Mode GSM 900/Globalstar Car Kit type SAT551

to which this declaration relates is in conformity with all the essential requirements of Directive 1999/05/EC

We hereby also declare that all essential [radio] test suites have been carried out and that the above named product is in conformity to all the essential requirements of Directive 1999/5/EC.

The conformity assessment procedure referred to in Article 10 and detailed in Annex V of Directive 1999/5/EC has been followed with the involvement of the following Notified Body:

BABT, Claremont House, 34 Molesey Road, Walton-on-Thames, KT12 4RQ, UK

Identification mark: **168**

The technical documentation relevant to the above equipment will be held at:

Telit Mobile Terminals SpA

V.le Stazione di Prosecco 5/b
34010 Sgonico TS
Italy

Trieste, *16/08/00*

Andrea Antonel
Quality System Manager

MOD.003 09/00 REV.1

Contents

Contents 3

Introduction 5

Safety Information 6

Basic Pack 9

Cradle 11
Amplifier 11
Micro telephone 11
Loudspeaker and microphone 11
Connecting wires for the vehicle IO devices 12
Stereo mute feature 12
Indication of switching on 13
Globalstar wire 13
Globalstar magnetic external antenna 13
GSM external antenna (optional) 14
Data connector 14

Installation precautions 15

Installation example 16

Installing the car kit 17

Installing the amplifier (ODU) 17
Installing the cradle 19
Connectors and keys on the cradle 23

Installing the micro telephone _____ 24
Installing the microphone _____ 25
Installing the speaker _____ 26
Connecting to vehicle IO devices _____ 27
Advice for wire routing _____ 28

Using the car kit _____ 29

Placing the Sat 550 in the cradle and removing it _____ 29
Switching on the telephone and the car kit _____ 30
Hands-free mode _____ 30
Adjusting the volume in hands-free mode _____ 31
Using the micro telephone _____ 31
Adjusting the volume on the micro telephone _____ 32
Connecting to a Personal Computer _____ 32

Technical information _____ 33

Introduction

This manual contains instructions for the correct installation and subsequent use of the car kit especially developed for the Telit Globalstar/GSM, Sat 550 model telephone.

The main functions of the car kit comprise:

- "hands free" function: enables to use the telephone while driving, in compliance with road safety laws;
- option of conversation privacy by means of the included receiver;
- telephone battery recharge function and stored power maintained during recharge;
- option for connection to a portable computer by means of the standard serial port RS232.

Please, read all instructions in this manual carefully to ensure correct installation of the car kit and exploit all device potential.

EC Conformity Mark

CE 168

This car kit complies with European Community Standards ETS 300342 and ETS 300831; EN 60950 in terms of the provisions of European Directives:

99/5/EC
89/336/EEC
73/23/EEC

and USA standards:

FCC part 15
FCC part 25

In accordance with ongoing improvements, specifications, design and other descriptions in the present manual are subject to modifications without prior notice.
The Manufacturer declines all liability for direct and/or indirect damage deriving from installation of this accessory.

© **Telit Mobile Terminals S.p.A.** All rights reserved.

Safety information

In your car

Always check on the laws and regulations governing the use of cellular telephones in force in the country in which you are driving. Should you use the telephone while driving, the following should always be adhered to:

- Always pay maximum attention to your driving.
- Only use your automobile kit where available.
- Do not stop your car in the emergency lanes on a motorway to make or receive calls, only stop the vehicle in parking areas provided.

Electronic devices

Most electronic devices are protected by RF signals. Some electronic apparatus may not be sufficiently protected against RF signals emitted by the cellular telephone.

Pacemakers

- When the telephone is switched on **always** keep it at least 30 cm from pacemakers.
- Do not keep the telephone in pockets near the thorax.
- Use the ear on the opposite side from the pacemaker when using the telephone.
- If you suspect any interference with the pacemaker, switch the telephone off immediately.

Other medical devices

If you are using the telephone near medical equipment, consult the manufacturer to ensure that it is adequately protected from RF signals.

The telephone must be switched off in medical centres where this is expressly indicated. It is possible that medical equipment in use in hospitals and medical centres may be sensitive to RF signals.

Vehicles

The use of cellular telephones inside vehicles may have a negative effect on their functioning, where these have not been correctly installed, and where RF signals emitted by the cellular phone have not been sufficiently shielded.

Where there are warnings

Always keep your telephone switched off wherever notices are posted expressly requesting this.

Aircraft

Standards set by aeronautical authorities forbid the use of telephones while an aircraft is flying.
Telephones must always be switched off before boarding an aircraft.

Locations where there is a danger of explosion

The telephone must be switched off, and the battery must not be removed wherever there is a danger of explosion. Always comply with warnings and instructions. In such locations the smallest spark may cause explosion or fire.
Areas that are subject to the danger of explosion are usually, but not always, clearly marked. These include, but are not limited to: filling stations like petrol garages, between decks on ships, depots or transhipment areas for fuels or chemicals, areas subject to the emission of fuel vapours, areas where the air contains chemical products, and any other area where the request is made that vehicles be switched off.

Other warnings

Keep the telephone out of reach of children.

Only use original spares and accessories. The use of any other components shall cause the guarantee to lapse.

Do not try to dismantle the telephone. It does not contain any parts that can be repaired by clients.

Avoid the telephone coming into contact with liquids. Should this happen it must be removed from the power supply if on charge, and the supplier must be contacted.

Avoid using the telephone beyond the temperature limits: -10°C and +55° C.

Never leave the telephone in direct sunlight or in very humid or dusty areas.

The telephone can be cleaned using a moist, soft cloth, dampened with a very diluted detergent solution.

No definite data is available as to any harmful effects related to the electromagnetic waves generated by cellular telephones. Exposure to such waves can be drastically reduced by using the car kit.

No definite data is available at this time as to the harmful nature of electro-magnetic waves generated by cellular telephones. In any event, exposure to electro-magnetic waves is drastically reduced by using the car kit device.

This car kit has not been designed and certified for installation on airplanes.

Basic pack

The standard car kit contains:

- Telit Sat 550 telephone holder (cradle);
- Amplifier unit (ODU, OutDoor Unit);
- Brackets and spacers for fixing amplifier unit;
- ODU front casing;
- ODU front casing frame;
- Telephone holder fixing bracket and rubber vibration dumpers;
- Receiver and relevant support;
- Globalstar magnetic antenna and relevant connection cables to the ODU;
- Loudspeaker complete with connection cable to the cradle;
- Microphone complete with connection cable to the cradle;
- Wires for connecting the cradle to the vehicle IO (Input Output) device;
- Globalstar cable (for connection between cradle and ODU);
- Screws, nuts and bolts;
- Installation and Operation guide.

Note: Should any of the items listed and shown on the following page not be found in the basic pack, please contact the retailer from whom you purchased your car kit.

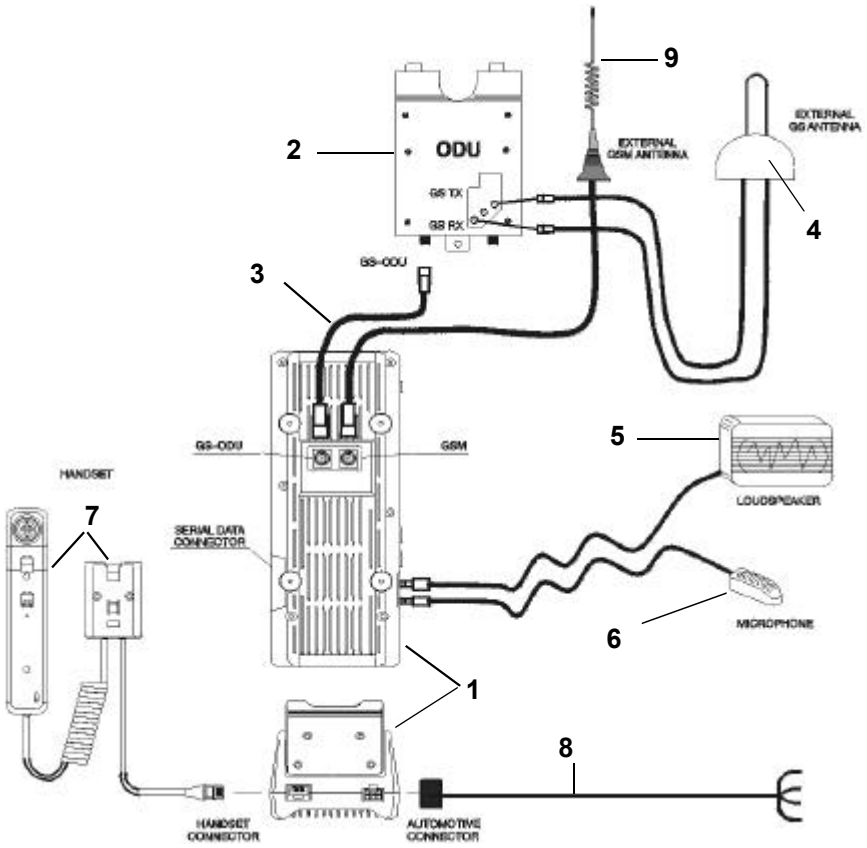

1. Cradle.
2. Amplifier unit (ODU).
3. Globalstar wire for connecting the cradle to the amplifier.
4. Globalstar external magnetic antenna.
5. Loudspeaker.
6. Microphone.
7. Micro-telephone and cradle.
8. Wires for connecting the cradle to the vehicle IO device.
9. GSM external antenna (not supplied).

Cradle

The cradle connects your Telit Sat 550 telephone to the car kit allowing you to use it with the micro telephone or in hands-free mode. When connected to the amplifier using a coaxial wire, the cradle amplifies the audio output, removes the echo, charges the Sat 550's battery and keeps it charged, and connects the telephone to the vehicle IO devices.

Amplifier

The amplifier (ODU) connects the external Globalstar antenna to the car kit. This must be housed in the passenger compartment or the boot of the vehicle, so as not to interfere with the normal use of the vehicle. It must also be so positioned that it is easily connected to the cradle (using the 5 m coaxial wire provided) and the magnetic external antenna (using the 2 m coaxial wire provided).

Micro telephone

The micro telephone (included in the pack) allows you greater privacy during a conversation than when using the hands-free mode. The use of the micro telephone automatically disables the hands-free feature.

Note: It is possible to change from a private conversation to the hands-free mode, by simply replacing the micro telephone in its cradle. To end a call, the ✆ key must be pressed on the Sat 550.

Loudspeaker and Microphone

The loudspeaker is fitted with a 2.8 m wire for connecting it to the cradle via the 3.5 mm stereo jack. When installing, position the loudspeaker at least 1 m from the microphone and **not** facing it.

The micro telephone is fitted with a 3 m wire for connecting it to the cradle via the 2.5 mm mono jack. When installing, position the microphone not further than 40 cm from the driver and secure it in position using the two-sided tape or the bracket provided, which is to be screwed to the vehicle using the two screws provided in the pack.

Connecting wires for the vehicle IO devices

The wires connecting to the vehicle IO devices are attached to the cradle by a 6-pin connector.
The purpose each wire serves is as follows:

- the red wire is to be connected to the car battery's positive terminal (+12 V).

Note: A 4 A retarded fuse must be placed in series with the red wire on the battery side. Should it fuse, it must be replaced with a similar fuse and you must have your car kit checked at an authorised service centre.

- The black wire must be connected to an earth point (e.g. an unpainted metal surface on the vehicle).
- The white wire must be connected to the vehicle's ignition.
- The blue wire must be connected to the feature for silencing the car radio (stereo mute).

Stereo mute feature (depending on the car radio used)

When the blue wire is connected to the radio in your vehicle, the automatic silencing feature silences the radio when a call is received.
When making a call this feature is only activated after the telephone number has been dialled and the call has been started by pressing the key, and a dial or engaged tone is established.

Indication of switching on

By connecting the white wire to the vehicle‘s ignition you will avoid any possibility of the vehicle telephone running the vehicle‘s battery flat. In fact, the switching on indication will only allow the car kit to be switched on and off when the vehicle is switched on and off.

Note: If you switch off the vehicle while a call is in progress, the call will not be interrupted.

Globalstar wire

The Globalstar wire is a 5 m long coaxial wire for connecting the amplifier to the cradle. These two units must only be connected to each other using the Globalstar wire provided in the pack.

Note: Do not cut or modify the Globalstar wire.
Ensure that the Globalstar wire is positioned inside the vehicle in such a way that it is protected from the weather.

Globalstar magnetic external antenna

The Globalstar external antenna (provided in the pack) must be installed for satellite communication using the car kit. The antenna is fitted with a magnet which allows it to be positioned temporarily on a metal surface (e.g. the vehicle‘s roof). It must face the sky and there must be no obstacles near it.
The Globalstar antenna is connected by means of the red and black connectors via the respective jacks on the amplifier.

Note: The antenna has been designed to withstand a maximum speed of 160 km/h (99 mph).
The antenna is fitted with a 2 m wire.

GSM external antenna (optional)

An external antenna can be used to improve the telephone's performance in GSM 900 MHz mode. This antenna must be connected via the TNC type connector, on the rear of the cradle, marked with a small black square.

Data connector

A serial RS232, 9-pin port is provided on the cradle. Laptop computers can be connected to this port for sending and receiving data and faxes.
This type of connecting wire is not included in the car kit.

Note: Data and fax transmitting depends on the network and type of subscription used. Consult your service provider for information as to the means by which these services are provided.

Installation Precautions

- The car kit must only be installed by trained technicians using the technical assistance provided at authorised service centres (a list of these centres is included in the pack). Any installation or repair that is not done correctly may be dangerous and cause damage to the car kit and the Sat 500, and will cause the guarantee to lapse.
- The car kit is designed for vehicles with a **12 V, negative earthed** power supply. Any other power supply or polarity may damage the car kit.
- The cradle and amplifier should be positioned so that they do not interfere with normal driving operations, and where they are not exposed to streams of hot air from the vehicle‘s heating system.
- The car kit must not be installed directly over electrical connections, electric wires, or fuel, lubrication oil, air conditioning, or any other type of ducting or piping.
- Do not install any electrical device near the airbag, or near the airbag opening.
- Only use the wires provided in the pack. Do not cut or modify them.
- Before starting installation of the car kit, the terminals must be disconnected from the vehicle’s battery.
- Before starting installation, check that the wires can be laid to connect the amplifier to the cradle, and the antenna wire to the amplifier and the Globalstar magnetic external antenna.
- On completing the installation, check that the wires connecting the vehicle‘s IO devices and the external antenna wire(s) (Globalstar and/or GSM 900) do not interfere with the opening and closing of doors, the boot, the sun visors, the wheels, brakes, gear change, or seats. Also check that all wires are working properly.
- On completing the installation also check that all the car kit‘s components are correctly secured and that they do not move around when the vehicle is moving or braking.

Installation Example

The installation of the car kit varies depending on the model of the vehicle. The diagram below shows a possible installation of the various components in the car kit.

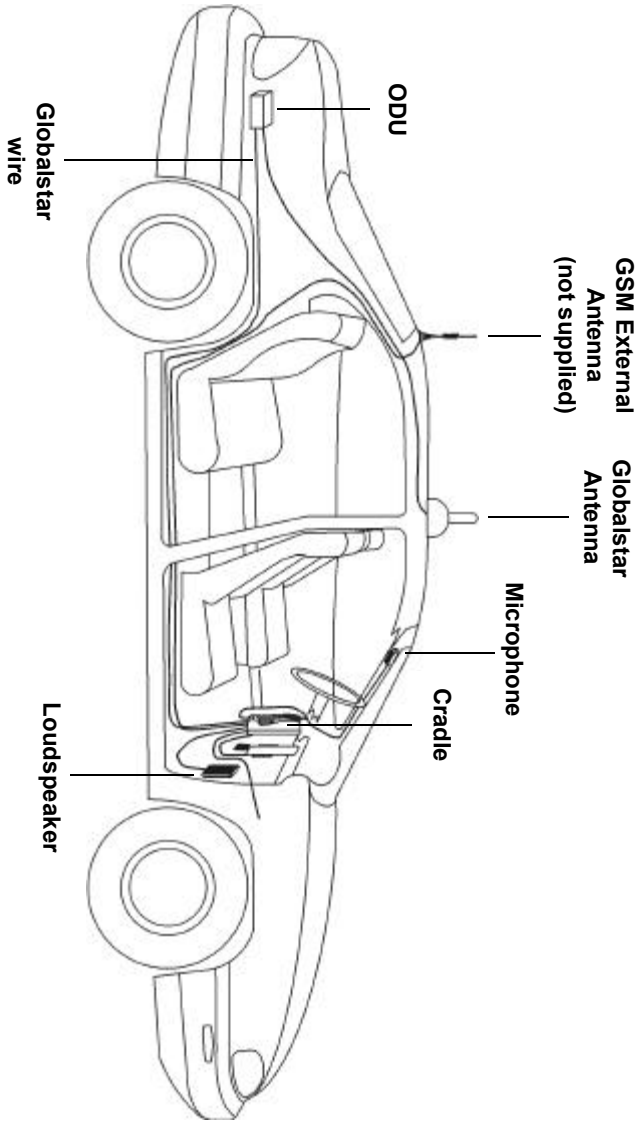

Installing the car kit

Installing the amplifier (ODU)

- Install the metal bracket for the amplifier and the four spacers (provided in the pack), by fixing it to a metal panel using 4 screws (not supplied).

Note: Before beginning to install the amplifier (for example in the boot), check that it will be possible to connect it to the cradle using the 5 m long Globalstar wire (provided in the pack) and the magnetic external antenna (using the 2 m long antenna wire).

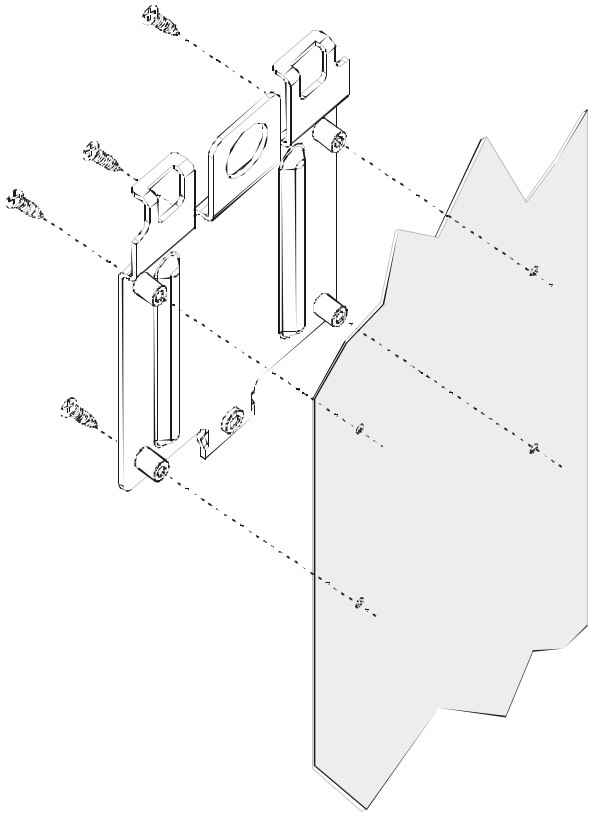

- Connect the coaxial wire for the Globalstar magnetic external antenna to the red and black connectors on the amplifier.

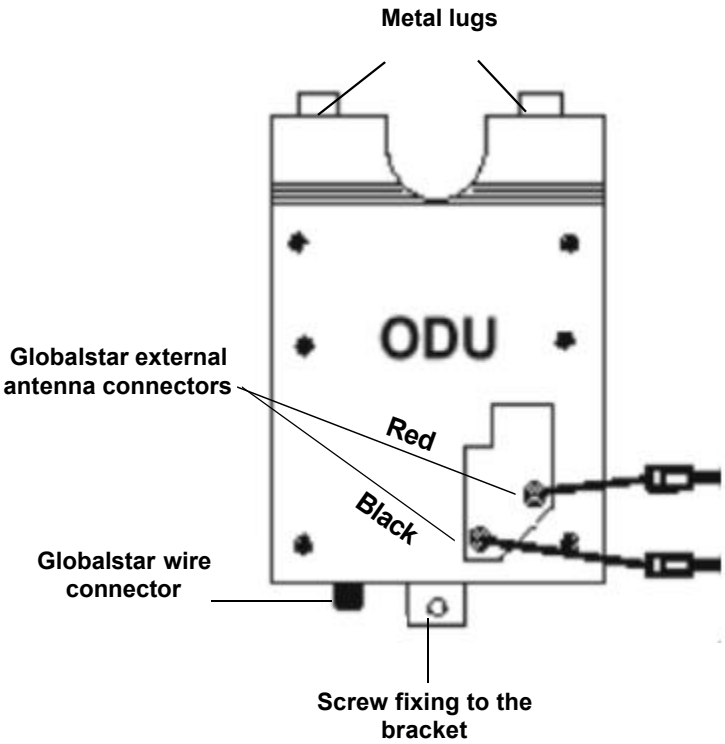

- Insert the two metal lugs on the amplifier into the spaces provided on the bracket, then fix in place using the screw provided in the pack.
- Fix the Globalstar wire to connect the amplifier to the cradle, using the connector provided on the amplifier.
- Fix the front plastic casing to the amplifier using the central screw (provided in the pack).
- Clip the plastic frame for the amplifier's front casing in place by pressing gently.

Installing the cradle

Note: Position the cradle inside the vehicle so that it does not interfere with normal driving operations, is not exposed to streams of hot air coming from the vehicle's heating system, and away from the airbag.
Before installing the cradle bracket, check that it can be connected to the amplifier (using the 5 m long Globalstar wire), the microphone (using the 2.8 m long wire), the loudspeaker (using the 3 m wire), the micro telephone and the vehicle's IO devices.

- Fit the cradle bracket (the screws are **not** provided in the pack) to the vehicle, choosing a position carefully that will allow easy, convenient use.

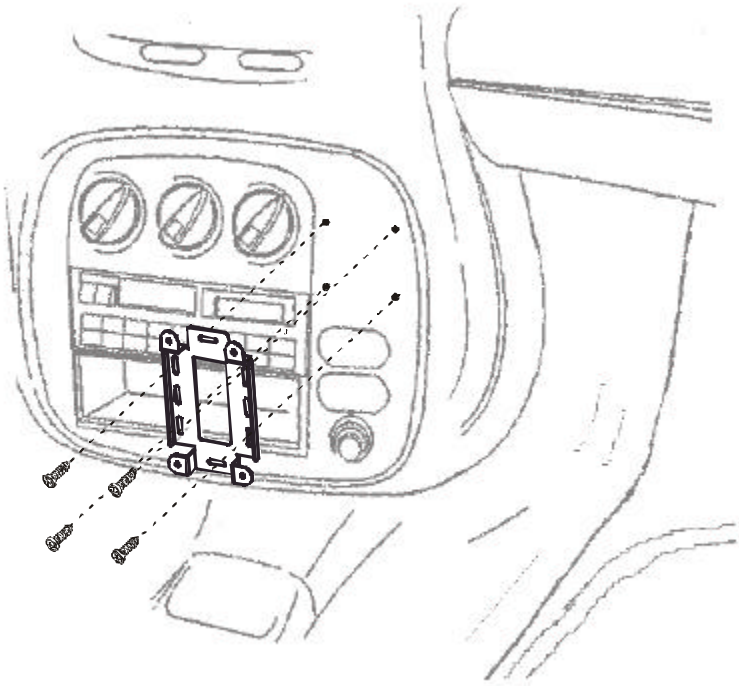

- Screw the vibration damping lugs (provided in the pack) onto the cradle bracket.

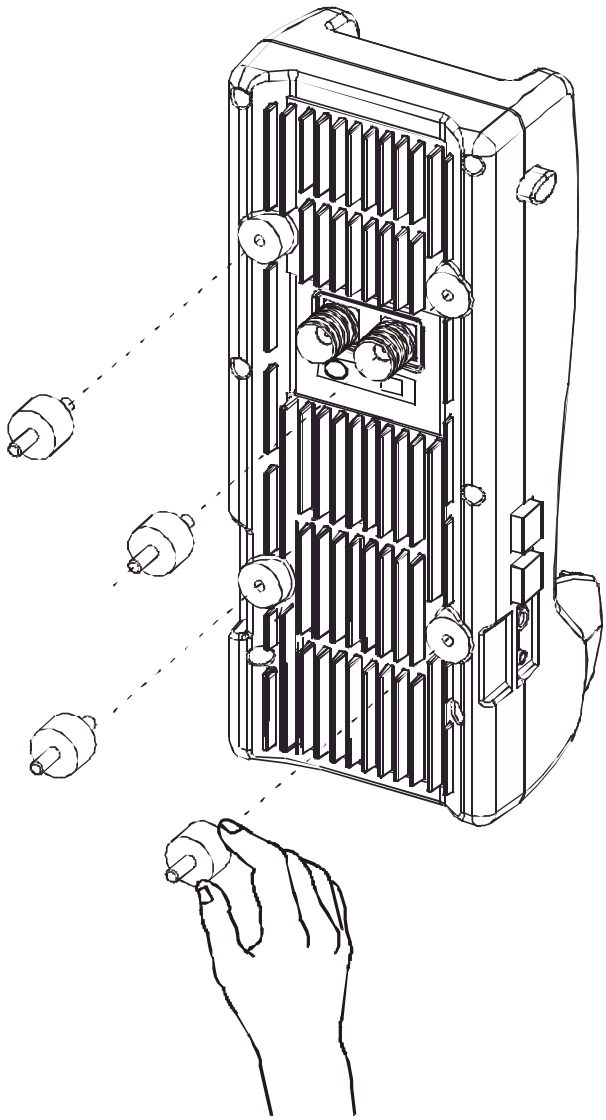

- Connect the Globalstar cable to the TNC connector on the back of the cradle, marked by the round red label.
- Connect the GSM 900 MHz external antenna (not provided in the pack) to the TNC connector on the back of the cradle, marked by a square black label.

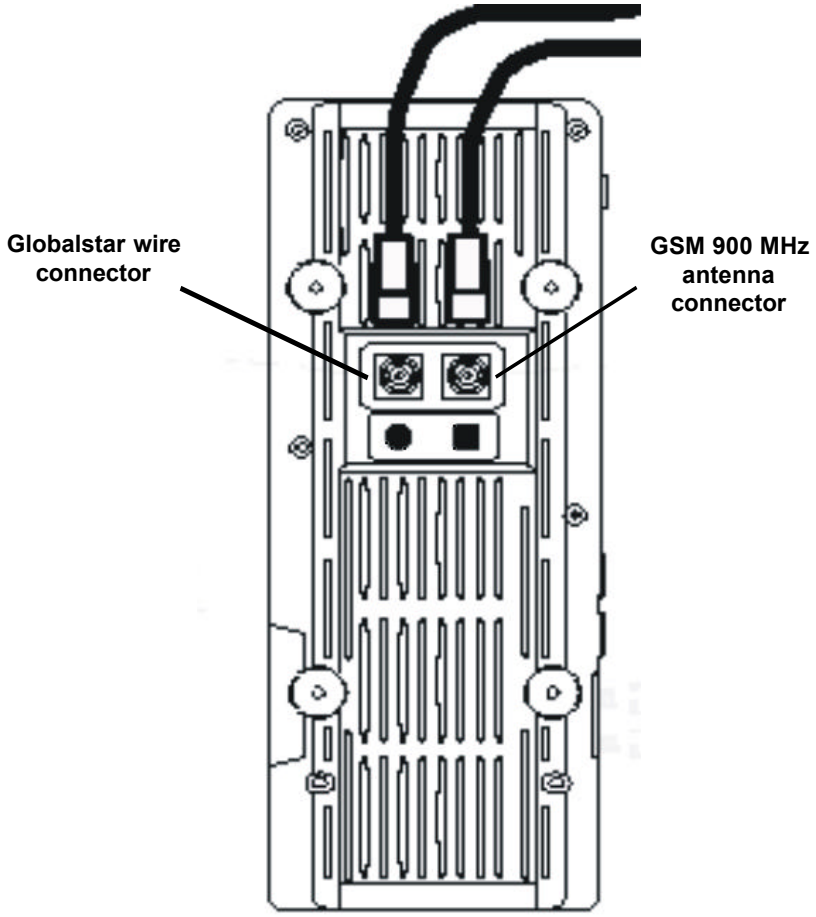

- Fix the cradle to the bracket using the washers and locknuts provided in the pack.

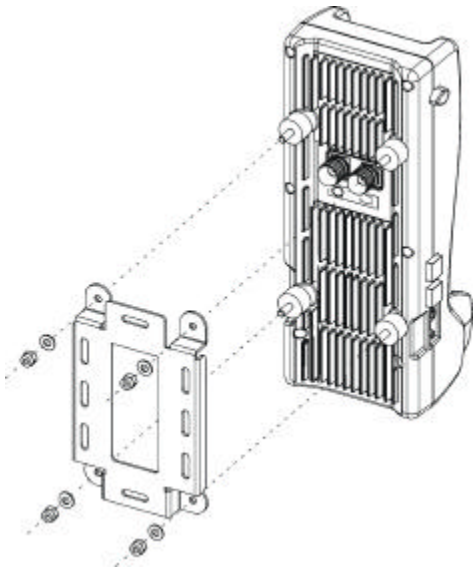

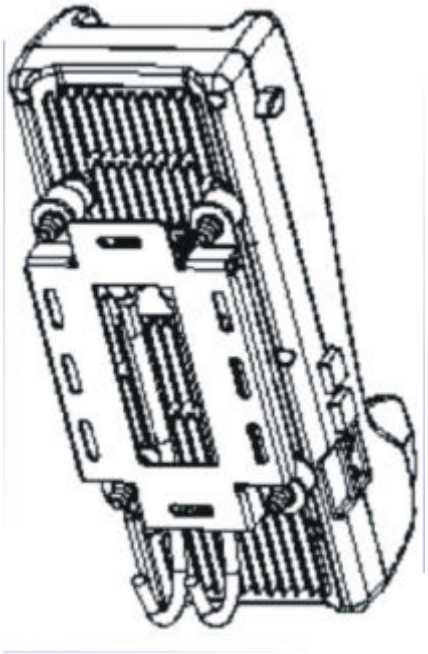

Connectors and keys on the cradle

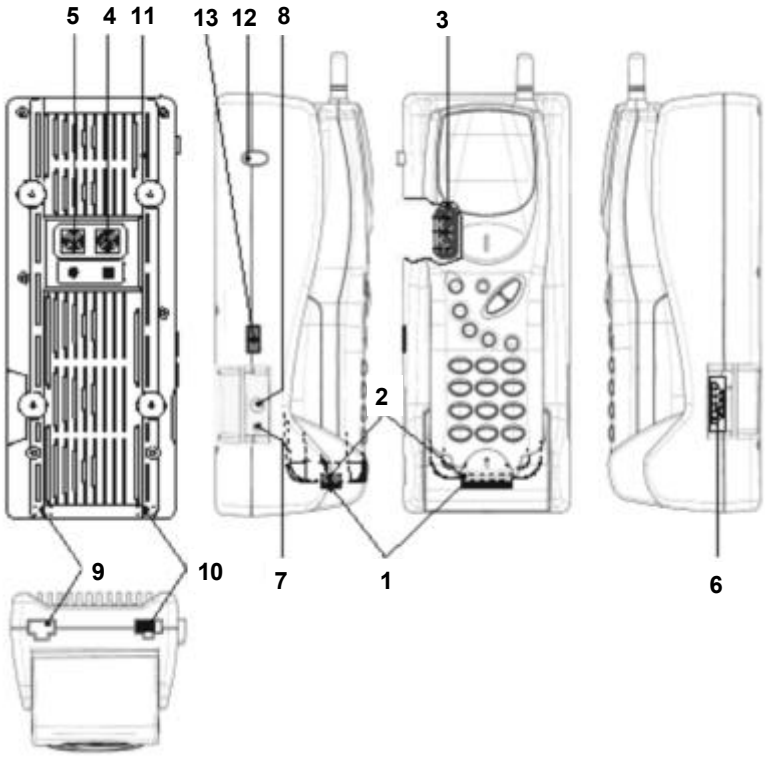

1. Cradle connector – Sat 550.
2. Connector Sat 550 – cradle.
3. Cradle antenna connectors – Sat 550.
4. Connector for external GSM 900 MHz antenna (optional).
5. Globalstar wire for connecting the cradle to the amplifier.
6. RS232, 9-pin data connector.
7. 2.5 mm mono audio connector for the microphone.
8. 3.5 mm stereo audio connector for the external speaker.
9. RJ45 type connector for the micro telephone.
10. Connector for vehicle IO devices.
11. Heat dissipator.
12. Key to release the Sat 550.
13. Key for adjusting hands-free and ring volume.

Installing the micro telephone

Note: Install the micro telephone inside the vehicle near the cradle, being careful not to hamper normal driving operations and staying clear of airbag openings.

- Secure the micro telephone bracket on a flat surface inside the vehicle using two screws (**not** provided in the pack).
- Connect the micro telephone to the cradle using the (1.45 m wire) with the RJ45 connector.

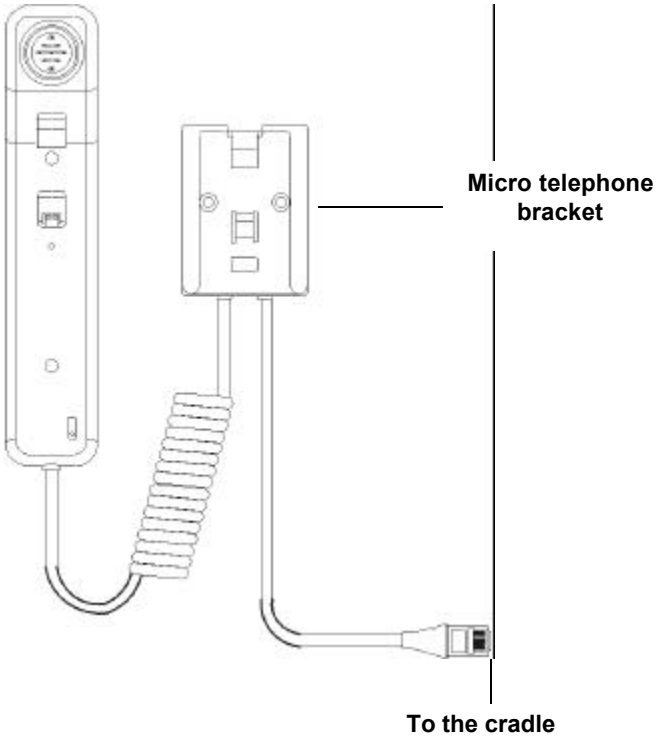

Installing the microphone

Install the microphone in the upper portion of the vehicle body using the relevant plastic bracket and two screws (provided in the pack), or on the sun visor using the double-sided adhesive tape.
The microphone must face the driver's mouth and not further than 40 cm from his mouth.

Note: It is inadvisable to direct the stream of air from the air conditioner towards the microphone, or to pass the wire connecting the microphone to the cradle through an air conditioning duct.
Fit the wire connecting the microphone to the cradle in such a way that it does not interfere with normal driving operations.

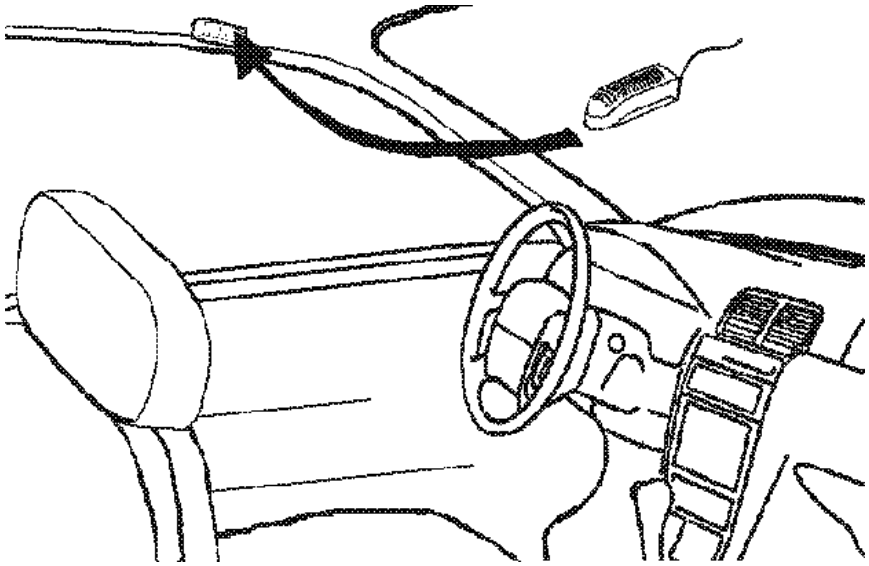

Installing the speaker

For best results, the speaker should be installed at least one metre from the microphone and **not** facing it.
Remove (if the speaker is to be fixed) the speaker bracket by exercising gentle outward pressure on it.
Secure the bracket on a flat surface inside the vehicle using two screws (**not** provided in the pack). The ideal position for the speaker is near the front passenger seat. Ensure that it does not interfere with the airbag opening.
Fit the speaker to the bracket.

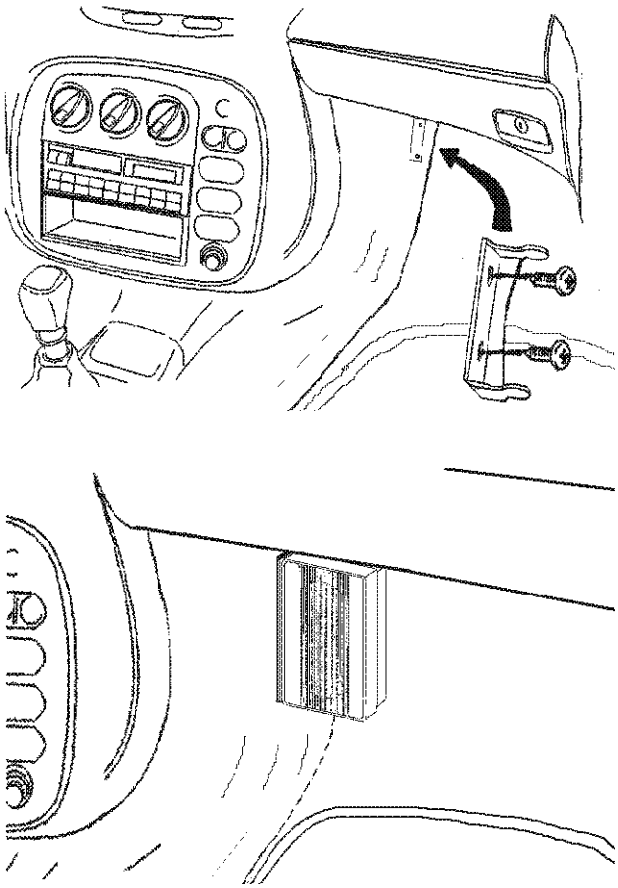

Connecting to vehicle IO devices

- Ensure that the vehicle is switched off and that the battery terminals have been removed before connecting the wires.
- Connect the red and then the white wire **only after all the other wires have been connected.**
- Ensure that the connections have been formed tightly.
- Ensure that the wires do not interfere with, and that they are not damaged by the movement of the seats, the pedals, or the handbrake.

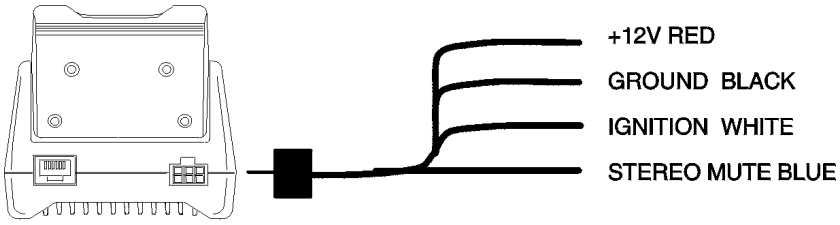

Connect the wires in the following order:

- Connect the **black** (earth) wire to an unpainted metal surface in the vehicle.
- Connect the **blue** (stereo mute) wire to the car radio, where fitted.
- Connect the **red** (+12 V) wire to the vehicle battery's positive terminal. **Insert a 4 A retarded fuse in series with the power supply, on the battery side.**
- Connect the **white** (ignition) wire to the ignition indication if the ignition key has an "ACC" position.
- Connect the microphone and speaker to the cradle.
- Connect the micro telephone to the cradle.
- Connect the cradle to the wires connecting it to the vehicle's IO devices.

Advice for wire routing

- Where possible use existing ducts.
- When choosing a route for wires, ensure that they do not hamper the movement of pedals, seats or the handbrake.
- Position the wires so that they do not interfere with other electronic devices.
- Be sure to cut the connecting wires for the vehicle's IO devices to the required length.
- Ensure that the connection between the amplifier and the cradle is inside the vehicle.

Using the car kit

Placing the Sat 550 in the cradle and removing it

To avoid damaging the Sat 550 telephone, before placing it in the cradle check that the yellow key at the top of the cradle is pressed and the Sat 550 is switched off.
Insert the Sat 550 into the cradle from the top. Having pushed it down, push it inwards until a click is heard which means that it has been secured. The stop on the cradle will hook the base of the Sat 550 to prevent it coming loose accidentally.

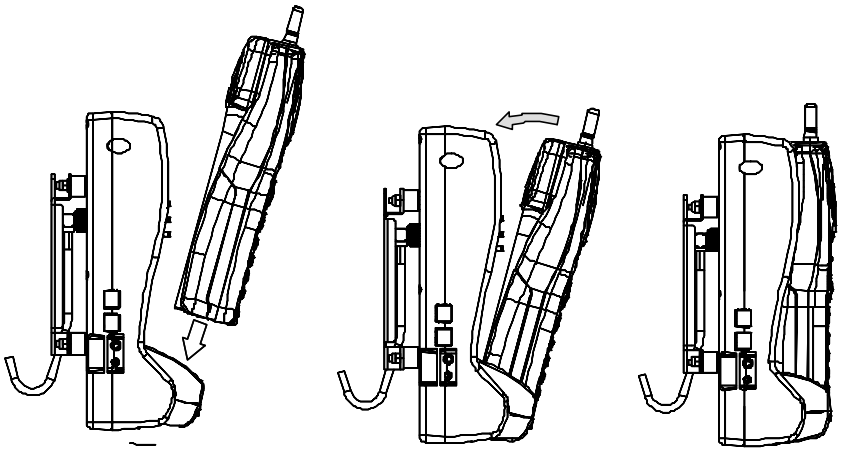

To remove the Sat 550 press the yellow key again and remove the telephone carefully.

Note: Once the Sat 550 has been placed in the car kit, the indication of an incoming call will be emitted via the speaker and not the telephone.
Only remove the telephone after switching it off, and after pressing the yellow button on the cradle to avoid damaging the telephone and the cradle.

Switching on the telephone and the car kit

The telephone and the car kit switch on automatically when the vehicle‘s ignition is switched on (if the white wire has been connected). For information on operating the Sat 550, consult its instruction manual.
If the Sat 550 is correctly placed in the cradle, the display will show the symbol ◖◗.

Note: Do not switch the telephone on when its use is forbidden or when the unit could cause interference on dangerous situations.

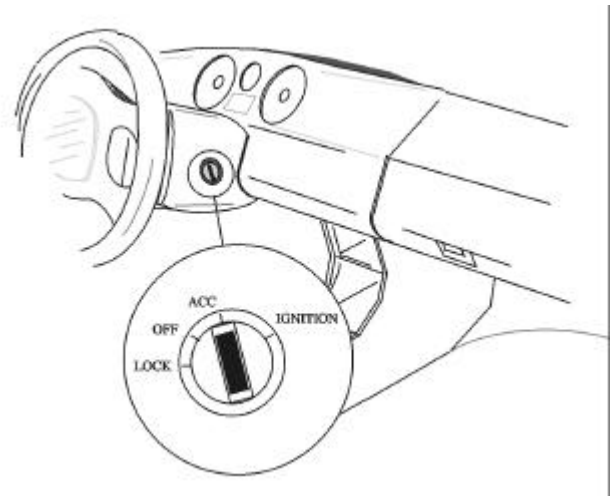

Hands-free mode

Once the Sat 550 has been placed in the cradle and switched on, calls can be made and received in hands-free mode immediately.
For best results in communication, we suggest you speak towards the microphone. The caller’s voice will be heard over the external speaker.

Note: Always pay maximum attention to driving while having a conversation.
Before making a call the vehicle must be stopped in a stopping zone.

Adjusting the volume in hands-free mode

To adjust the conversation volume when in hands-free mode, merely press the keys on the side of the cradle. The upper key increases the volume, the lower decreases volume.
The volume of the ring can be set using the same keys while the telephone is in stand-by mode.

Note: The Sat 550 menu may also be used to adjust communication and ring volumes, or the # * keys may be used. Consult the Sat 550 instruction manual.

Using the micro telephone

The micro telephone (included in the pack) may be used for a private conversation. The hands-free mode is automatically disabled when the micro telephone is removed, and can be reactivated by replacing the micro telephone.

Note: The micro telephone is not to be used while driving. It must only be used when the vehicle is stopped in a stopping zone.

A call can also be made in private mode:

- Remove the micro telephone from its support.
- Key in the telephone number on the Sat 550 keyboard.
- Press the key.

To end the call simply press the key.

Note: A call that started while the ignition was switched on will continue until ended even when the vehicle‘s ignition is switched off during the call.

Adjusting the volume on the micro telephone

The volume of a conversation in private mode can be adjusted by using the volume adjuster on the side of the micro telephone.

Connecting to a Personal Computer

A laptop PC can be connected to the car kit, using the RS232, 9-pin connector, to transmit data and faxes.

Note: The telephone cannot be used while you are transmitting or receiving data.
An analogue facsimile machine cannot be connected directly to the car kit to receive faxes.
Data transmission is a network service. Consult your service provider for information on how to access this service.

Technical Information

Cradle Dimensions	220 x 90 x 40 mm
Cradle Weight	500 g
Cradle Operating Temperature	0 / +40° C
Cradle Storage Temperature	-20° / +55° C
Globalstar Antenna Operating Temperature	-10° / +50° C
Globalstar Antenna Storage Temperature	-20° / +55° C
Car kit power supply	From the vehicle‘s battery: ⇨ Nominal Voltage: +12V; ⇨ Normal Voltage: +13.2V; ⇨ Minimum and maximum Voltage: +10.8V / +15.6 V;
Microphone pre-amplifier	⇨ Maximum entry signal: 210 mV_{rms}; ⇨ Maximum Distortion: 0.35%; ⇨ Maximum absorption: 10 mA
Speaker pre-amplifier	⇨ Maximum entry signal: 2.28 V_{rms}; ⇨ Maximum output signal : 5.1V_{rms}; ⇨ Maximum distortion: 5.77%; ⇨ Maximum absorption: 800 mA