Iridium Satellite LLC
8440 South River Parkway
Tempe, AZ 85284 USA

Tel. Toll Free
1-866-947-4348

Local or International
1-480-752-5155

E-mail info@iridium.com

IRIDIUM

IRIDIUM ICHU1000 Installation Manual Single Channel Unit

Introduction

Congratulations on your new Iridium handset or PSTN (Public Switched Telephone Network) telephone.

Your Iridium system is a modular system that consists of an antenna, transmitter/receiver, handset and/or desk unit, and optional PSTN telephone/PBX (Private Branch Exchange) switchboard.

You can operate the Iridium system in voice mode from a handset, desk unit, and/or PSTN telephone. To the system you can connect up to five handsets or desk units **and** one PSTN telephone or PBX switchboard.

Please note

Any responsibility or liability for loss or damage in connection with the use of this product and the accompanying documentation is disclaimed. The information in this manual is furnished for informational use only, is subject to change without notice, may contain errors or inaccuracies, and represents no commitment whatsoever. This agreement is governed by the laws of Denmark.

Doc. no.: M4150GB1 Issue: G/0303

Contents

1 Configuration of Single-Channel Unit 2

2 Installation 3
2.1 Cable Overview 3
2.1.1 Scanbus Termination 5
2.2 Where to Place the Satellite Transceiver Box 7
2.3 How to Mount the Satellite Transceiver Box 8
2.4 How to Put on the Finishing Cover 9
2.5 How to Insert the SIM Card 10
2.6 How to Remove the Finishing Cover 11
2.7 Installation of the Antenna 12
2.8 PABX/PSTN Interface 15
2.9 Data Interface 15

Appendix A 17
Spareparts List 17

1 Configuration of Single-Channel Unit

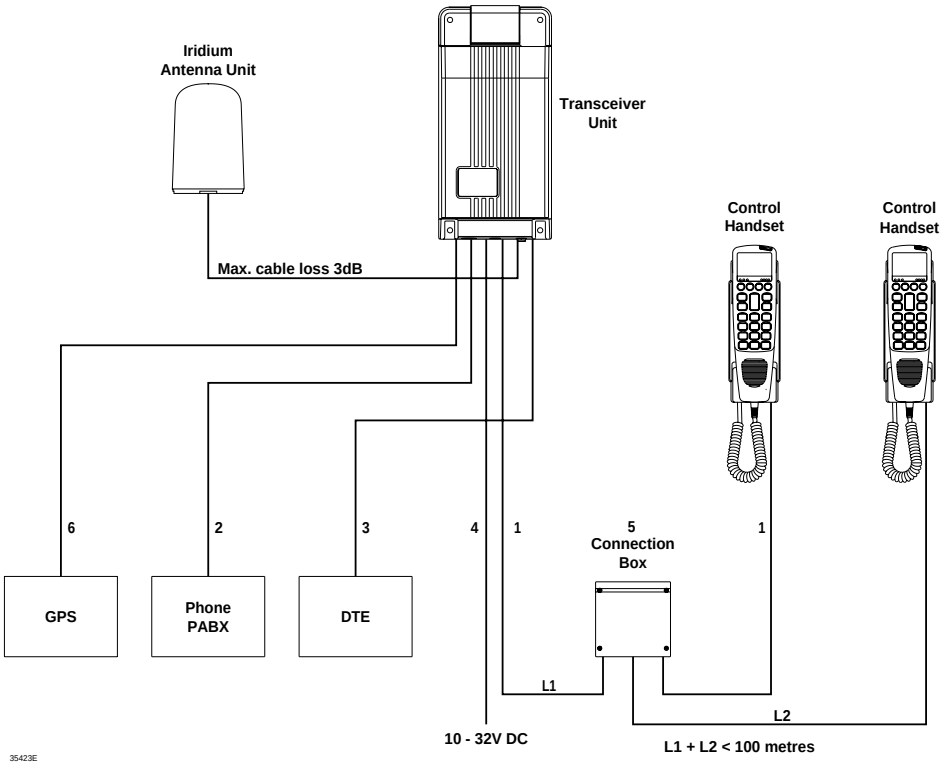

2 Installation

2.1 Cable Overview

Cable 1
Scanbus
Cable: 9*0.22 mm^2 shielded
shield connected to ground
Cable connector type: 9 pole sub-d male

Transceiver	Description	Handset	Colour	
1	NC	1		
2	data+	2	white	Twisted pairs
3	data-	3	brown	
4	AF+	4	green	Twisted pairs
5	AF-	5	yellow	
6	GND	6	grey	Twisted pairs
7	+24V DC	7	pink	
8	RX_AF+	8	blue	Twisted pairs
9	RX_AF-	9	red	
shield	GND	shield		

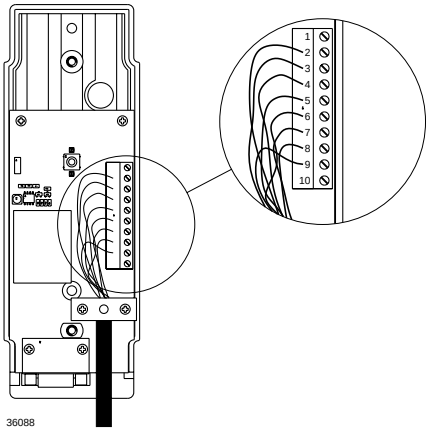

Cable 2
Phone
Cable connector type: RJ 11

Transceiver	Description	Veritas
1	NC	1
2	phone1+	2
3	phone1-	3
4	NC	4

Cable 3
Data
Cable: 9*0.22 mm^2 shielded
shield connected to ground
Cable connector type: 9 pole sub-d male

Transceiver	Description	Veritas
1	DCD	1
2	received data	2
3	transmitted data	3
4	data terminal ready	4
5	serial GND	5
6	data set ready	6
7	request to send	7
8	clear to send	8
9	RI	9
shield	GND	shield

Cable 4
Power supply

Pin no.	Description	Colour
1	10-32V DC	red
2	0V DC	black
3	NC	white
4	GND	green

Front view

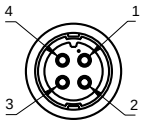

36662A

Cable 5
Description of connections to T-connection H4196
The wire terminal blocks are connected in parallel.

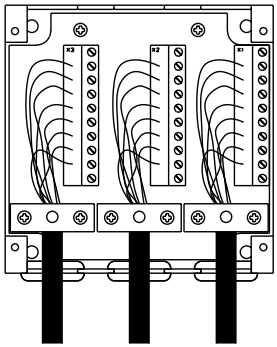

36090

Cable 6
GPS input

Cable: 9*0.22 mm^2 shielded
shield connected to ground
Cable connector type: 9 pole sub-d male

Transceiver	Description	Veritas
1	NC*	1
2	PC Rx (RS232)	2
3	PC Tx (RS232)	3
4	NC*	4
5	GND (RS232)	5
6	NC*	6
7	NMEA+	7
8	NMEA-	8
9	NC*	9
shield	GND	shield

* Do only connect a standard RS232 terminal cable. If only NMEA needed, then do not connect to other pins than 7 and 8.

2.1.1 Scanbus Termination

The scanbus connectiong the transceiver and the control units, has to be terminated. Only the first and last unit on the bus shall have the termination in ON position.

The termination in the transceiver unit is done by setting the jumper S3, located near the scanbus terminal on the PCB (see figure below). As default, the jumper S3 is set ON.

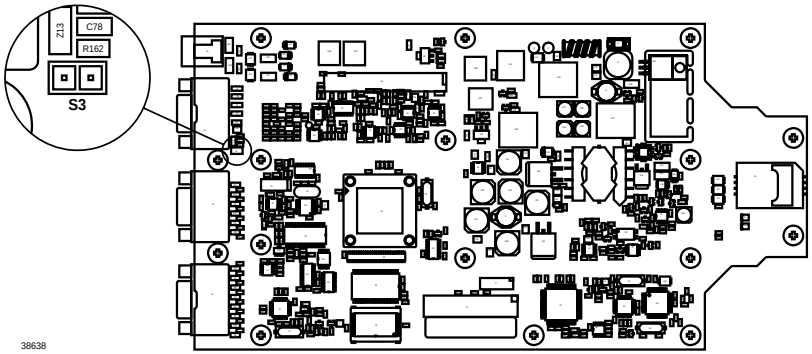

The termination in the control unit is located on the PCB in the cradle as jumper S1 (see figure below). As default the jumper S1 is set ON.

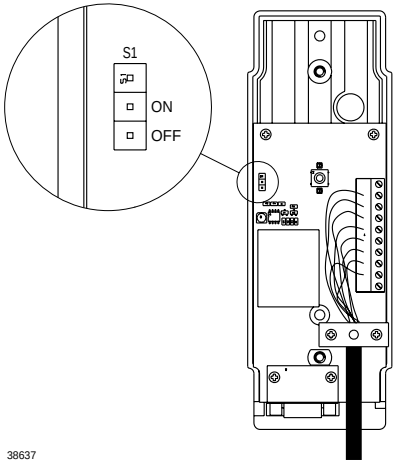

When configuring a system only including a transceiver unit and one control unit, no changes in the default termination is needed. If the system includes more than one control unit, it is needed to remove some of the default terminations. Below two examples of scanbus termination is given, when the system includes several control units.

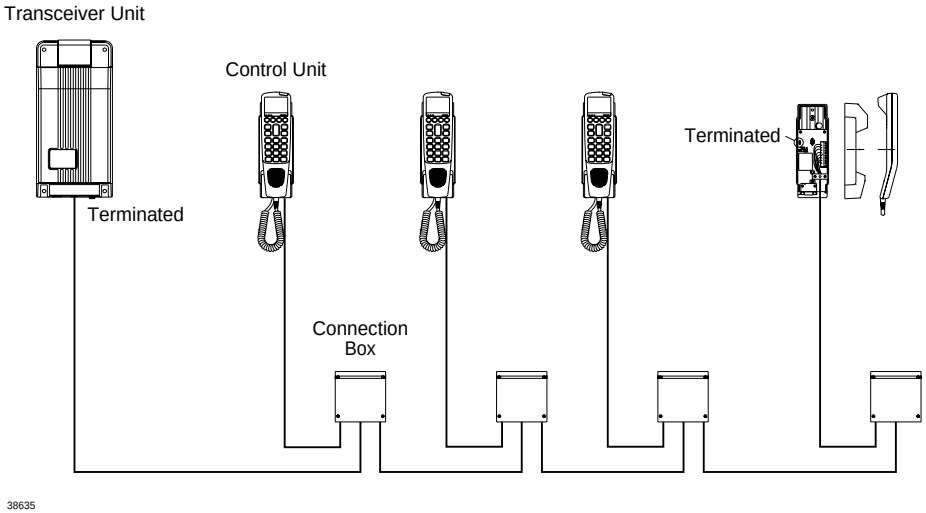

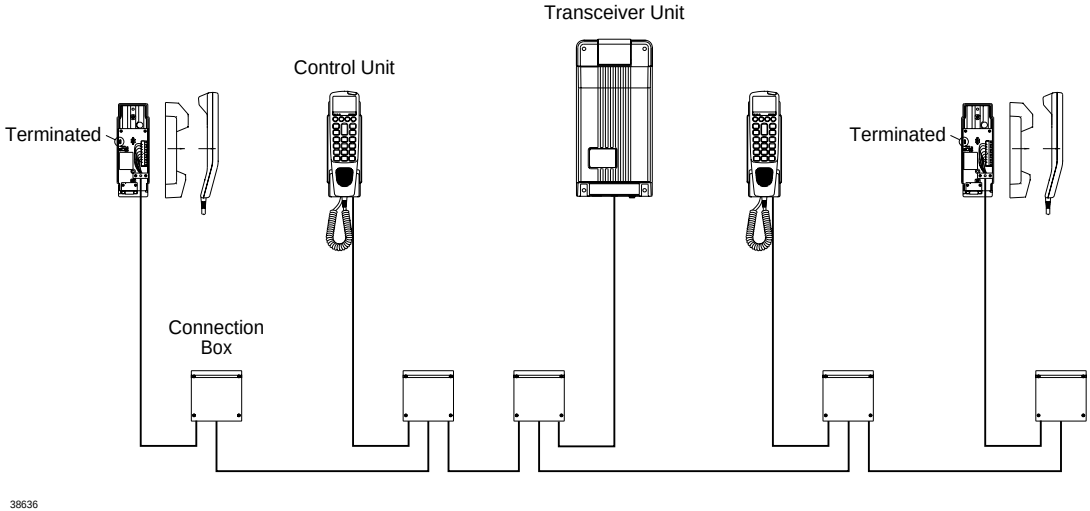

2.2 Where to Place the Satellite Transceiver Box

Mount the satellite transceiver box in a place where it is sheltered from the wind, protected from the salty and humid sea atmosphere. The temperature must not exceed 55° C.

To ensure that the SIM card is easily accessible, do not place the satellite transceiver box higher than 1.5 m above the floor.

2.3 How to Mount the Satellite Transceiver Box

Fix the satellite transceiver box to the wall using the four screws included in the package. The screws are positioned as shown below:

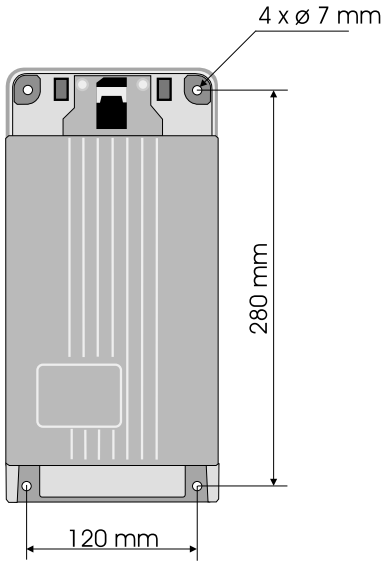

First tighten three of the screws. The wall surface should be plane. If there is a discrepancy in planeness exceeding 1 mm, level the discrepancy up by shims or washers under the fourth screw before this is tightened.

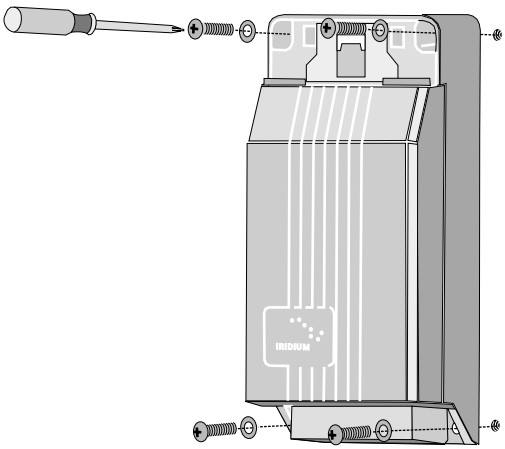

2.4 How to Put on the Finishing Cover

When the satellite transceiver box has been mounted on the wall, put on the finishing cover.

The small lid in the finishing cover should be shut. Press the hooks inside the finishing cover down on the two thin edges of the satellite transceiver box. While pressing, let the two plastic spears inside the finishing cover into the two square holes of the satellite transceiver box.

①

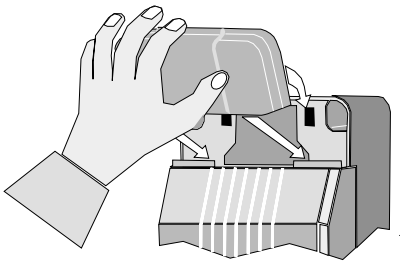

②

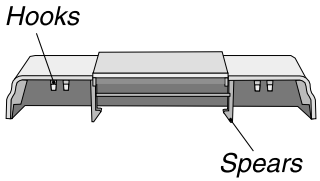

Press hard on the spots shown in the picture below until a loud click is heard.

③

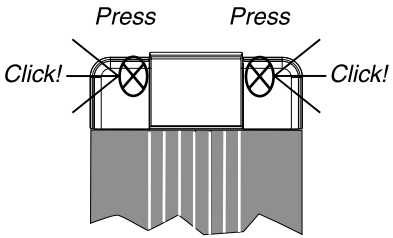

When putting on the finishing cover, do not use any tools – only your hands.

2.5 How to Insert the SIM Card

First, open the small lid in the finishing cover protecting the SIM card reader. Then go through each of the following steps:

Unlock the SIM card holder by pushing the lock with your finger nail.

①

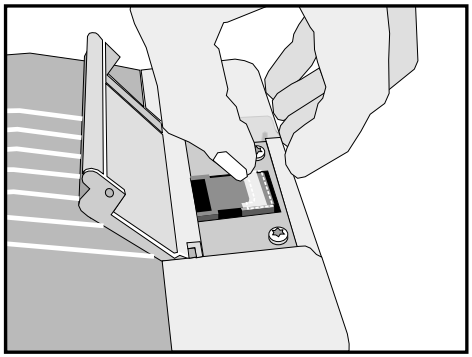

Lift the SIM card holder so that the slot points upwards.

②

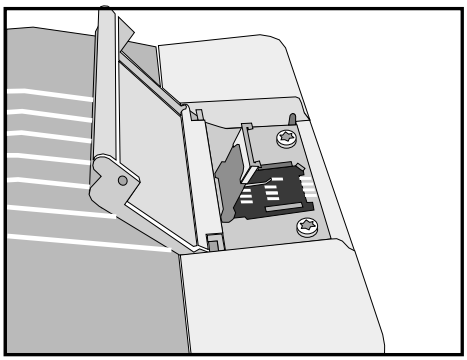

Insert the SIM card in the slot. Make sure that the cut-off corner of the card is placed as shown in the picture.

③

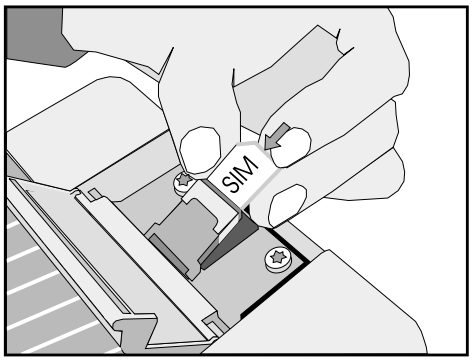

Push the SIM card holder back down, and lock it by pushing the lock with a finger nail.

④

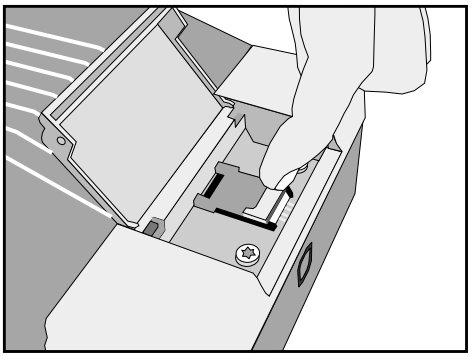

Finally, shut the lid again.

2.6 How to Remove the Finishing Cover

You may need to dismount the satellite transceiver box from the wall, e.g. in connection with service.

For access to the mounting screws, the finishing cover can be removed from the satellite transceiver box as follows:

① Put a screwdriver into the slot in the printed circuit board beside the SIM card reader, and press gently to unhook the plastic spear.

② While pressing with the screwdriver, lift up the same side of the finishing cover slightly to loosen it.

③ Repeat this procedure on the other side of the finishing cover.

④ You can now detach the finishing cover from the satellite transceiver box by pulling it gently upwards.

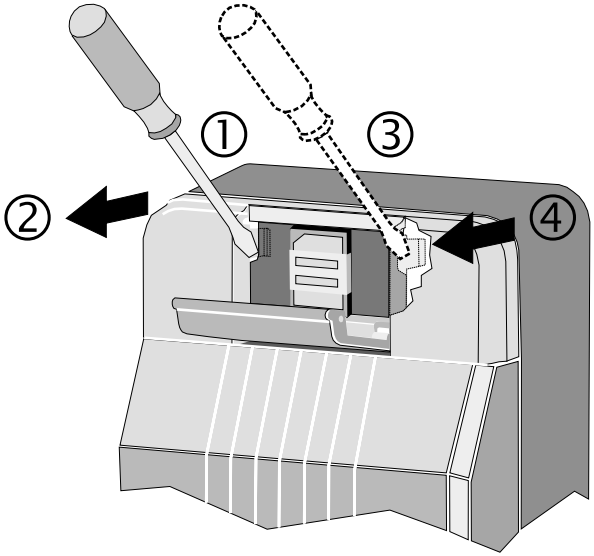

2.7 Installation of the Antenna

One of the advantages of this equipment is the easy-to-handle, lightweight and rugged antenna. Because the IRIDIUM ® system is characterised by a good link margin, the antenna is a passive quadrifillar helix type, requiring no external power supply and consisting of only nonmoving parts.

The following figures show the antenna and the two different mounting accessories available:

The mounting bracket in fig. 1 can be used in two different ways - mounted on either a rail or a pole.

The fitting in fig. 2 can be used at the top of a tube. **Please note** that it is necessary to mount the cable, and seal this connection securely before the antenna and fitting are mounted on the tube.

Important!
For FCC RF exposure compliance, the antenna must be installed with a minimum distance of 0.61m (2 feet) away from all persons.

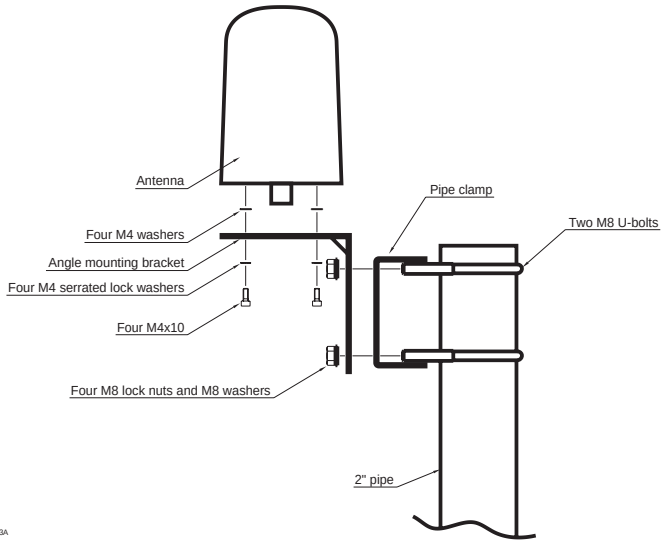

Fig. 1

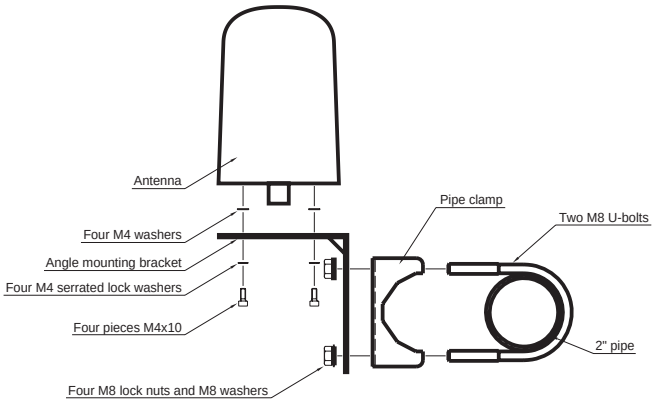

Fig. 2

Precautions

In order to avoid interference or any other kind of disturbances from other systems on board, there are a few precautions to take note of:

Radars

According to any installation guide for radars it is of vital importance that any other units are kept outside the radiation beam of the radar. Please consult fig. 3, showing what area to avoid:

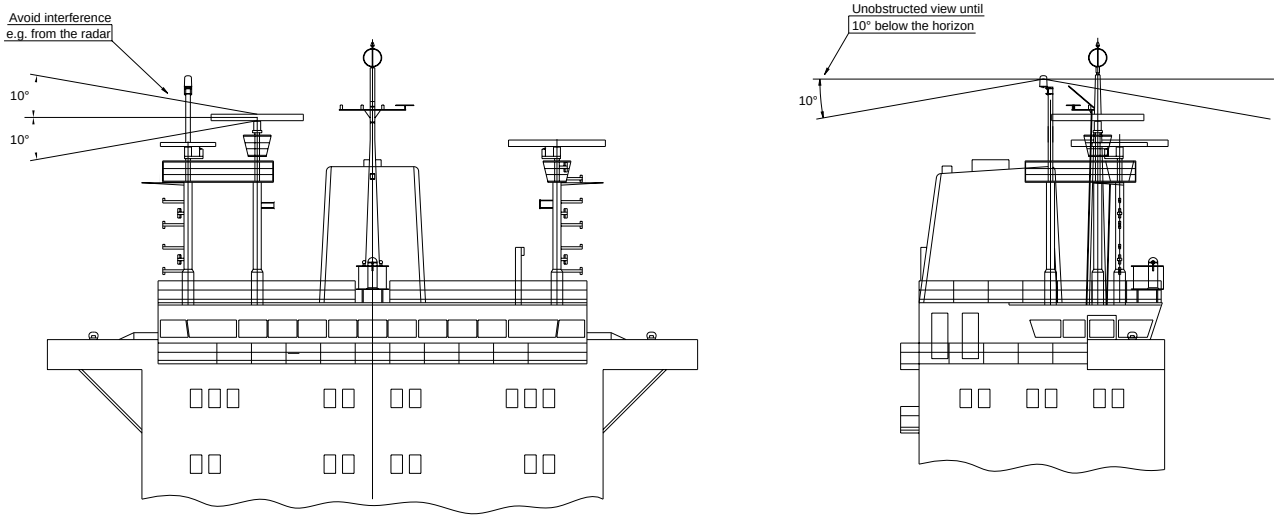

36622A

GPS

Tests have shown that only in case very old GPS equipment is used, a user may expect a minor influence on the GPS originated from the Iridium equipment. This can be avoided by ensuring a distance of at least 1 m between the two antennas.

Inmarsat equipment
The operating frequency bands of the iridium and Inmarsat systems are neighbours, and it is not in any way by any technical solution possible to completely separate these bands. This means that interference from Inmarsat can be expected, especially if the antennas are placed near each other. The distance between the antennas Should be as far as possible.

If in any way the user experiences trouble using Iridium because of Inmarsat, a filter can be provided as an option. This filter is placed in a suitable place between the antenna and the transceiver. The filter is a passive type not requiring external power but the filter loss of 1.2 dB have to be added to the total cable loss between the transceiver and the antenna. Please contact your dealer for further information.

The table below shows the distance to other Inmarsat equipment, with and without use of filter.

9505 ISU Protection Distance	Main Lobe (Metres)	Side Lobe (Metres)	Back-Lobe (Metres)	
No Filter	14	4	4	Inmarsat (Mini-M)
No Filter	25	4	4	Inmarsat (Std-M)
No Filter	84	20	20	Inmarsat A
No Filter	70	16	16	Inmarsat B
No Filter	14	14	14	Inmarsat C
With Filter	1	1	1	Inmarsat (Mini-M)
With Filter	1	1	1	Inmarsat (Std-M)
With Filter	4	1	1	Inmarsat A
With Filter	4	1	1	Inmarsat B
With Filter	1	1	1	Inmarsat C

Antenne cable
Below, please find a table of cables that can be provided by your dealer:

CABLE					CONNECTOR	
Cable type	Part no.	Maximum length/ 3 dB loss	Outer diameter	Minimum bending radius	Conn. type	Part no.
RG 214/U	E62.415	8 m	10.8 mm	54 mm	N	MALE E62.147
SUCOFEED 1/2" HF	77.518	19 m	13.4 mm	35 mm	N	MALE 79.002
SUCOFEED 1/2"	77.519	30 m	16.0 mm	125 mm	N	MALE 79.001
SUCOFEED 7/8"	77.520	50 m	27.8 mm	220 mm	N	MALE 79.003 & FEMALE 79.004

2.8 PABX/PSTN Interface

This interface handles and converts 2-wire audio and control signals from/to the PABX into audio and control signals from/to the LBT. The interface is placed on the control unit BUS, allowing the PABX to act as control unit. The interface handles the following tasks:

- generates DC current to the PABX in both idle and active mode
- generates ringing voltage
- detects call requests from the PABX
- detects DTMF tones from the PABX
- converts audio TX/RX from the Iridium system to a 2-line balanced signal

This means that an ordinary two-wire system telephone can be connected to the onboard PABX unit/PSTN socket - and the call can then be initiated from this telephone, e.g. from the captain's cabin or the cargo control room. The built-in SMPS of 10-32 V DC generates the necessary current to support the PSTN telephone of the system.

Specification of the Iridium system PSTN connection:

RJ11 connection:
1. nc
2. TIP
3. RING
4. nc

Line Voltage:	48V DC
Line current (source):	24 mA
Line impedance:	270 Ω + 750 Ω // 150 nF (this impedance also covers 600 Ω)
Ringing voltage:	60VRMS, 90 Vpp (square wave)
Ringing sequence:	0,6 sec On, 4 sec Off.
Ringing frequency:	30 Hz
Ringing drive capability:	1400 Ω @ 30 Hz (= 5 normal ring units)

2.9 Data Interface

The Iridium terminal includes a 9 pol Sub-D connection. The connection is a RS232 interface.
For using this interface, please contact your Iridium Service Provider, that will supply you with Iridium Data Interface software

Appendix A

Spareparts List

IRIDIUM	81412010
Item	**Itemnumber**
Power cable	56.140
TNC/N adaptor	79.005
LBT	55.915
Controller-PCB	638451
ID kit	49.314
Fuse	45.669
Scanbus male 9p Sub-D	78.758
Scanbus female 9p Sub-D	78.765
Housing 9p Sub-D	78.745

EuroCom Industries A/S

Lautrupvang 4a
DK-2750 Ballerup
Denmark

- Porsvej 2
  DK-9200 Aalborg SV
  Denmark

Tel. +45 7013 7000
Fax +45 4474 8501
- Fax +45 9634 6200
E-mail eci@eci.dk