SAILOR SC4150
Operating Instructions

List of contents, see page 1.

Handset

What Is What?

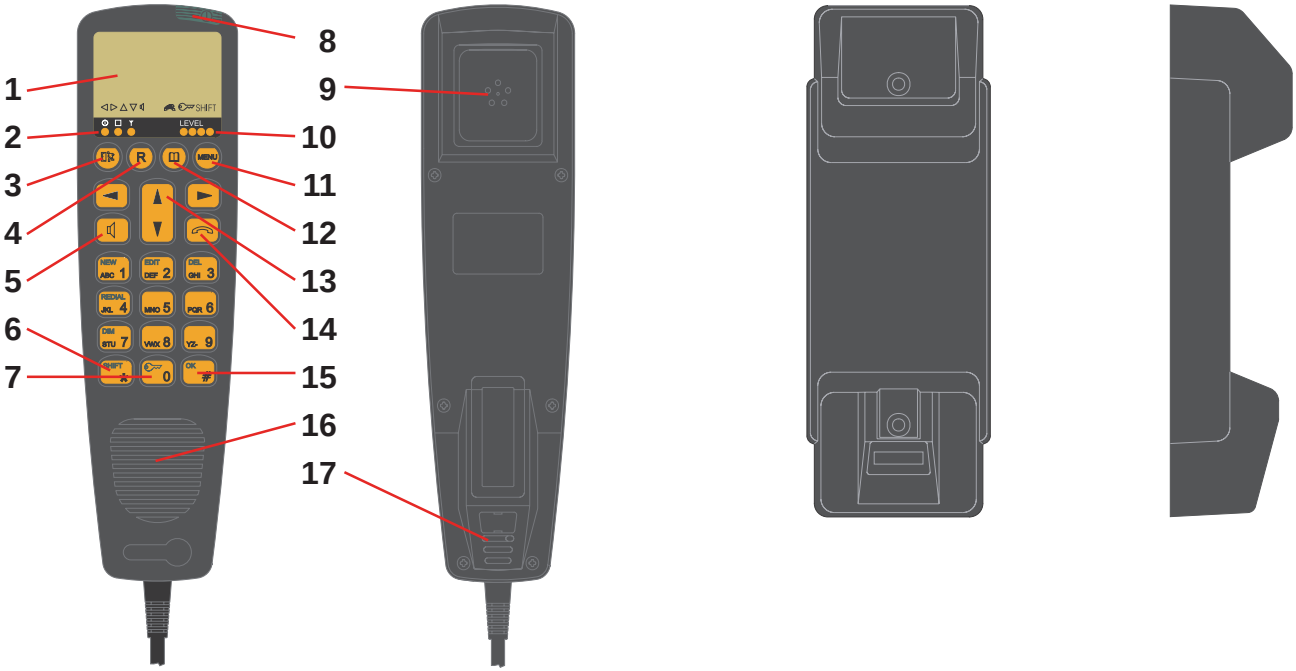

1. Display
2. Indicator lamps
   - ⏻ Power
   - ☐ Call
   - ⚲ Network
3. Escape key
4. Call transfer key
5. Loudspeaker on/off key
6. Shift key
7. Lock on/off key
8. On/off button
9. Earpiece
10. Signal level
11. Opens menu
12. Opens phone book
13. Volume control
14. Hook on/off key
15. OK key
16. Loudspeaker
17. Microphone

Introduction

Congratulations on your new Iridium equipment.

Your Iridium equipment is a modular system that consists of an antenna, transmitter/receiver, control handset and/or fixed control unit, and optional PSTN telephone/PBX.

You can operate the Iridium equipment in voice mode from a control handset, fixed control unit, and/or PSTN telephone. To the system you can connect up to four handsets or fixed control units **and** one PSTN telephone or PBX switchboard.

Important!
For FCC RF exposure compliance, the antenna must be installed with a minimum distance of 0.61m (2 feet) away from all persons.

About this Manual

This manual provides instructions on how to operate a control handset and telephone.
Basically, the manual consists of two main parts: The first deals with **simple** operation, which includes e.g. making and answering calls. The second part describes the more **advanced** functions of the system.
All functions of your Iridium equipment can be tested by following the step by step procedures described in this manual. Each procedure is an explicit sequence of key presses that has to be carried out.
Unless otherwise specified, the description of the individual procedures has been based on the assumption that the CU is enabled and has returned to idle state. See section “Handset Enabling/Disabling” under “Handset Simple Operation” on how to enable and disable the handset.

Returning to Idle State on an Enabled CU:

1. Press , if necessary, a number of times until one of the following idle texts are shown in the display:

- Ready
- Occupied
- Internal Call
- External Call
- Locked

and possibly time, date and time or position depending on the status of your Iridium equipment. Alternative idle texts are specified in section “SIM Card Messages” under “SIM Card Handling”.

2. Make sure that the CU is hooked on. Place the handset in the cradle and press if the icon is shown in the display.

We recommend that you read the manual before using the equipment.

Please note

Any responsibility or liability for loss or damage in connection with the use of this product and the accompanying documentation is disclaimed. The information in this manual is furnished for informational use only, is subject to change without notice, may contain errors or inaccuracies, and represents no commitment whatsoever. This agreement is governed by the laws of Denmark.

Doc. no.: B4150GB0 Issue: E/0303

SAILOR
SAILOR ® · Porsvej 2 · PO Box 7071 · DK-9200 Aalborg SV · Denmark
Phone: +45 9634 6100 · Fax: +45 9634 6101 · Telex: 69789 ECI DK
E-mail: sailor@sailor.dk · Web: www.sailor.dk

Contents

Handset ..... **iii**
What Is What? iii
Introduction ..... **iv**
About this Manual ..... **iv**
Iridium Satellite System **1**
Abbreviations **1**
Using a Telephone **2**
Handset Simple Operation **3**
Handset States 3
Handset Enabling/Disabling 3
Pin Code 3
Unlocking Handset 3
Call Functions 4
Making a Manual Call 5
Answering a Call 6
Call Transfering 6
Transferring AFTER Answering 6
Automatic Transferring BEFORE Answering 6
Handset Advanced Operation **7**
Menu System 7
Phone Book 8
Deleting a Stored Entry in the Phone Book 9
Calling a Number from the Phone Book 9
Redialling 10
Security Lock Function 10
User ID/User Name List 10
Disabling Security Lock 10
Enabling Security Lock 11
Password 11
Users 12
Call Log 13
Setting Time and Date 14
Setting Dimmer and Contrast 15
GPS 15
Display 16
SIM Card Handling 16
Enabling and Disabling PIN Codes 16
Entering the PIN Code 17
Changing the PIN Code 17
Unblocking a Blocked SIM Card 18
Ringing Tone 18
Extension 18
Call Answer 19
Call Forwarding 19
Voice Mail 20
Call Barring 21
Call Waiting 22
Call Hold 22
Conference Calling 22
Software Version 23
Resetting 23
Tone Signalling 24
Appendix A **25**
Tone Signalling 25
Appendix B **26**
Function Menu Overview 26
Dimmer/Contrast Menu 28

Iridium Satellite System

Iridium is a global satellite network for telecommunications. It consists of 66 satellites providing world-wide coverage.

The Iridium system makes it possible for any two locations on Earth to establish wireless global telephone contact.

Abbreviations

CU	Control unit
GPS	Global Positioning System
DTMF	Dual Tone Multiple Frequency
LBT	L-Band Transceiver
PBX	Public Branch Exchange
PSTN	Public Switched Telephone Network
UTC	Universal Time Coordinated (app. the same as Greenwich Mean Time)
RTU	Receiver and Transmitter Unit (also called Transceiver)

Using a Telephone

To your Iridium equipment, you can connect a PSTN telephone or a PBX. Many of the system's more advanced features, like the security lock function, are however not accessible from a telephone. Neither is any SIM card action. Therefore, when using the telephone, the SIM card has to be operational. This means that the pin code has to be disabled on the card, or the pin code must be entered from a CU before the telephone is used. A CU is either a handset control unit or a desk mounted control unit.

Telephone Call Syntax

For **external calls**, entering a telephone number on a PSTN telephone follows the syntax of this example:

1. Pick up phone: ready tone.
2. External call **0**
3. Prefix for automatic call **0 0**
4. Country code, e.g. **4 5**
5. Area code, e.g. **7 0**
6. Subscriber's number, e.g. **1 3 7 0 0 0**
7. To confirm you want to make the call,

   press #

For **internal calls**, entering a telephone number on a PSTN telephone follows the syntax of this example:

1. Pick up phone: ready tone.
2. Internal number, e.g. **1001**
3. To confirm you want to make the call,

   press #

Factory setup of extension numbers are:

PSTN/PBX:	1000
CU 1:	1001
CU 2:	1002
CU 3:	1003
CU 4:	1004

Up to four control units and a telephone/PBX can be connected to the transceiver at the same time. Note that if connecting a PBX to the transceiver, the PBX must function as a PSTN telephone.

To dial control unit 1 from a local telephone connected to your Iridium equipment via a PBX, first pick up the phone, then:

1. Dial the number for the outgoing line connected to the transceiver, eg. **10**
2. When you hear the ready tone, dial the extension number of control unit 1: **1001**
3. To confirm you want to make the call,

   press #

DTMF Tones - Limitations:
When used for internal calls, control units do not generate DTMF tones. Therefore the PBX cannot be set up for using DTMF tones to access extension numbers.

Handset Simple Operation

To the Iridium system you can connect up to four handsets.
A handset can be in one of two states: enabled or disabled.

Handset States

In each of the two states, the handset's normal display and signalling can be described as follows:

Disabled State:

- The display is cleared and the light is off.
- The indicator lamp **Power** is flashing briefly every 5 seconds.

Enabled State:

- In the enabled state, various information is shown on the display. An example:

```
Ready

01.01.1999
23:59:59
```

- The indicator lamp **Power** is on.

Handset Enabling/Disabling

To enable/disable the handset:

1. Press and hold the on/off button.

2. Wait until you hear the continuous tone signalling or see that the indicator lamps **Power**, **Call** and **Network** are turned on simultaneously.
3. Release the on/off button.

Pin Code

Each time a valid SIM card with an enabled PIN code is inserted, you are asked to enter your pin code:

```
Enter PIN

7/9/1999
12:00:48
```

Key in the pin code supplied with the SIM card (see the installation manual). If the pin code keyed in is correct, the handset enters ready state also called **idle state**:

```
Ready

7/9/1999
12:00:49
```

If any internal or external call is in progress or if for some reason the Iridium network is not available at the time, a different text is shown in the display.
If you did not key in the correct pin code, you will have to try again. If you keyed in a wrong pin code three times in a row, you will have to enter the PUK code (also supplied with the SIM card). See section "SIM Card Handling" under "Handset Advanced Operation" for further details.

Unlocking Handset

If the handset is locked, you have to unlock it before it can be used.

```
Locked

7/9/1999
12:05:06
```

To unlock the handset:

1. Press:

   The display shows a list of user names. Your user name (I.e. the current value of the associated priority level) determines which facilities you have access to. Furthermore, the user name that is used for unlocking the handset is the name stored in the call log each time an external call is made.

```
>Captain
Commander
Crew
Officer
```

2. To find the right user name on the list, eg. Commander, use:

3. Confirm:

Password for
Commander
_

4. Key in the password that corresponds to the selected user name.

5. Confirm:

Call Functions

Speaker, Earpiece and Microphone

The earpiece is always turned on. The speaker and microphone are always in opposite states, i.e. if the speaker is on, the microphone is off, and vice versa.

You can toggle the speaker and microphone states by means of the speaker key. The speaker icon appears on the display when the speaker is on, and disappears when the microphone is on.

Hands free operation is not possible. You can call or receive a call, and toggle the speaker on - for listening purposes only.

Note: When the speaker is off, you can see that you are being called (the display will show “Incoming Call”) - but there will be no sound in the speaker.

Hooking On/Off

Before a call can be initiated, the handset must be hooked off. To do so, either remove the handset from the hook or use the on/off-hook key.

The handset icon on the display indicates three states, depending on whether the handset has been hooked on or off.

1. Handset removed from hook, but hooked on by hook key.

2. Hook off.

3. No icon: Handset placed in hook, and hook on.

Volume

During a conversation, the speaker and earpiece volume can be adjusted by means of:

Manual Telephone Call Syntax

For **external calls**, entering a telephone number on the handset follows the syntax of this example:

1. Hook off either by removing the handset from the hook

   or by pressing the hook key

2. External call **0**

3. Prefix for automatic call **0 0**

4. Country code, e.g. **4 5**

5. Area code, e.g. **7 0**

6. Subscriber’s number, e.g. **1 3 7 0 0 0**

7. Confirmation **#**

For **internal calls**, entering a telephone number on the handset follows the syntax of this example:

1. Hook off either by removing the handset from the hook

   or by pressing the hook key

2. Internal number, e.g. **3 4 4**

3. Confirmation #

Making a Manual Call

Provided that no internal or external calls are in progress and that the CU is enabled and unlocked, it is possible to make an internal call.

Furthermore, if a valid SIM card has been inserted into the SIM card slot and the correct PIN code has been entered or the PIN code has been disabled, it is also possible to make an external call.

In order to be able to make a manual call, the CU must either be in idle state or inside the phone book. For a description on how to return to idle state, see section “About this Manual”. If the idle text differs from ‘Ready’ (e.g. SIM card messages) only internal calls are possible.

Now in order to make a manual call, do the following:

1. Hook off.

If the system is **occupied**, a busy tone is heard in the earpiece/speaker, and the display shows either

Internal call	or	External call

depending on whether an internal or external call is in progress.
If the system is **ready** to make a call, a ready tone is heard in the earpiece/speaker, and the display shows:

Enter number _ Type 0 for ext. calls	or	Enter number _ Internal calls only

2. Use the numeric keys to key in the number you want to dial.

   For external calls, first key: **0**

To delete the previous digit, if desired, press:

An Example:

Enter number
0 0 0 4 5 7 0 1 3 7 0 0
0 _

3. Confirm the call and start dialling by pressing:

4. A calling tone is heard from the earpiece/speaker, and the display shows:

Connecting

5. When the connection has been established, the display shows:

Connected to
0 0 0 4 5 7 0 1 3 7 0 0
0 _

6. When one of the communicating parties hooks on, the display indicates that the other user should do the same by the words:

Call
terminated

Answering a Call

NOTE: When the speaker is off you can see that you are being called, (the display will show “Incoming Call”) but there will be no sound in the speaker. The speaker can be toggled on and off using:

1. When the handset rings, remove it from the hook and communicate as on an ordinary telephone.
2. Adjust the volume in the earpiece or loudspeaker by means of:

3. When you want to stop communicating, or when you hear a busy tone, hang up.

Call Transfering

A call can be transfered to another CU. The procedure depends on whether or not the call is answered before it is transferred.

Transferring AFTER Answering

When you answer a call, the display shows:

Connected

To transfer the call:

1. Press:

Enter number _

2. Now, key in the extension number to which the call should be transferred.
3. To transfer the call, press:

Call is transferred

- or:

To cancel transferring the call, press:

Automatic Transferring BEFORE Answering

A call can be transferred to another CU automatically before it is answered. To see if the auto transferring function is enabled,

press:

The display will show eg.:

Call trans- fer enabled Local: 1001 Delay: 0 sec 10	or	Call trans- fer disabled

The auto transferring parameters can be set up individually for each handset in the function menu:

1. To enter the function menu, press:
2. To select the “Setup” item, press:
3. To find the “Transfer” item, use:

   and press:

4. To select “Enable” or “Disable”, use :

and press:

The function has now been enabled or disabled depending on your choice.

To select to which extension number(s) incoming calls should be transferred, follow the steps described above. In step 4, however, select “Extension”, after which you can key in and confirm the wanted extension number.

To specify the time in seconds (0-60) that the call should ring before it is transferred to the specified unit, follow the steps described above. In step 4, however, select “Delay”. If the delay is set to 0 seconds, the call is transferred immediately; before the first handset rings, the call is transferred to the chosen transfer destination.

Handset Advanced Operation

The system features a large number of special functions. For those of the functions that are likely to be used the most, there are special buttons or shifted functions in connection with the numeric keys. The functions used less often can be found in the menu system.

Menu System

The handset contains several functions for changing the system settings, showing the status of certain system parameters, configurations, and testing the system.

The menu system can always be entered from an enabled and unlocked CU which is in idle state. See section “About this Manual” on how to return to idle state.

To enter the function menu system, press the following key:

The function menus appear:

```
  MENU
> Setup
  Call log
  System
```

The “Setup” menu contains all functions for changing the system parameters, such as volume, ringing tone, user names and passwords.

The “Call log” menu contains information on each call made, including details about when the call was made, its duration, and the receiver’s telephone number.

The “System” menu contains all functions needed for the system administrator/super user to test and configure the system.

Keying in Names and Numbers

When keying in letters and numbers in the phone book, or in connection with user names and passwords, you will need to know how many times to press each key. Pressing the key

once,

for instance, will give a “D”; pressing the key twice, will give an “E”, etc.

1st push:	D
2nd push:	E
3rd push:	F
4th push:	d
5th push:	e
6th push:	f
7th push:	2

After each character keyed in, wait a little while to go to the next character (the cursor appears when it is ready), or use the right arrow key. The left arrow key deletes the last character entered.

When inside the phone book or user list;

- to create a **new entry**, press:

- to begin **editing** the entry selected on the list, press: 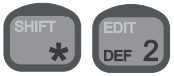

- to **delete** the entry selected on the list, press:

Phone Book

The phone book offers the following facilities:

- Up to 100 entries with names and numbers can be stored. A telephone number may consist of up to 20 digits, and a name may contain a maximum of 11 characters.
- Any of the 100 stored telephone numbers can be used to initiate a call.
- Each entry in the phone book can be deleted.
- New entries can be added to the phone book as long as some of the 100 entries are free.
- The name and/or number stored in every entry can be changed.
- The stored entries can be searched alphabetically.
- The current extension/local number for all connected control units are stored in the phone book. However, only one control unit at a time can operate in new, edit, or delete mode. If a control unit tries to enter one of these modes, and another control unit has done the same, the display will show: **Phone book occupied**.

The phone book can always be entered from an enabled and unlocked CU which is in idle state. See section “About this Manual” on how to return to idle state.

Searching the Phone Book

When you need to find a stored entry, first open the phone book by pressing:

The display then shows a list beginning with the first entry in the phone book:

```
>Andrew
Brian
Claus
Dennis
```

To find previous/following entries, use:

When you have reached the last entry, the phone book begins from number one again.

Alphanumeric Search

You can also search the phone book by means of the alphanumeric keys. When inside the phone book, pressing e.g.

moves the cursor to the first entry beginning with an A. If no entry begins with an A, or if the key is pressed twice, the cursor moves on to the first entry beginning with a B, etc.

Changing a Number Stored in the Phone Book

To edit a stored number in the phone book:

1. To enter the phone book, press:
2. To select the desired entry in the phone book, press:
3. To enter the shifted functions, press:
4. To select the edit mode, press:
5. Key in the name that corresponds to the number.
6. To store the name, press:
7. Key in the number using of the numeric keys.
8. To store the new number, press:

Storing a New Entry in Phone Book

To store a new entry (name and number) in the phone book:

1. To enter the phone book, press:
2. To enter the shifted functions, press:
3. To select the new mode, press:
4. Key in the name that corresponds to the number.
5. To store the name, press:
6. Key in the number using of the numeric keys.
7. To store the number, press:

Deleting a Stored Entry in the Phone Book

1. To enter the phone book, press:
2. To select the desired entry in the phone book, press:
3. To enter the shifted functions, press:
4. To select the delete mode, press:
5. To confirm deleting the selected entry, press:

Calling a Number from the Phone Book

To call a number stored in the phone book:

1. To enter the phone book, press:
2. To select the desired entry in the phone book, press:
3. To prepare for making the call:
   - Lift the handset

     or

   - Press:

Now, follow the steps described in connection with “Making a manual call”, beginning with step 3.

Redialling

It is possible to redial the last number dialled by the current user. To do so:

1. Hook off.
2. Press:

3. Press:

4. To initiate the call, press:

A ringing tone is now heard from the handset. To go on with the call, follow the steps described in connection with “Making a manual call”, beginning with step 4.

Security Lock Function

The handset can be protected against unauthorized use via the security lock function. This works together with the list of user names and corresponding passwords. The security lock requires that the user selects his user name from the list, and then keys in his personal password before the handset can be used for making calls.

The default password for all the users on the user list is “password”, i.e. 61778562. Passwords can be edited in the Setup/Password menu (the user’s own password) or in the /Setup/Users menu using

(Passwords of users with a lower priority than the current user).

The security lock function ensures that only users recognized by the system can unlock the handset and make calls through the Iridium system.

Answering incoming calls is not protected by the security lock.

Note that from a PSTN phone (stand alone or via PBX), the security lock is not an option.

The security lock function affects all control units. That means that if one control unit disables the lock, the lock is disabled on all control units connected. The same goes for enabling the lock.

User ID/User Name List

Every user specified in the system is given a priority value. The priority value determines what the user is allowed to do in the system. By default, the user list contains 6 entries with different priority values. The 6 default users are shown below.

User ID/User Name	Priority value
SUPER USER	0
Captain	1
Commander	4
Officer	10
Crew	100
Passenger	200

The super user has the highest priority in the system and is therefore not restricted in any action. The super user can edit all other users. A user can create, edit, and delete users of a lower priority; e.g. a user of priority value 4 may create, edit, and delete users of priority values 10, 100, and 200.
Each facility/function in the handset has a priority value. The priority value of the facility/item and the user’s priority value determine whether the user has access to the item or not.

The user ID is written in the call log so it is possible to identify who has made which calls.

Disabling Security Lock

To disable the security lock, the user has to be identified with a priority value of 4 or less (Commander, Captain, or SUPER USER).

To disable the security lock:

1. To enter the function menu, press:

2. To select the “Setup” item, press:

3. Find the “Lock” item using:

   and press:

4. Find the “Disable” item using :

and press:

5. Find the right user name using:

and press:

6. Key in the password, and press:

The security lock function is now disabled. This means that the handset is ready for use for everyone without any identification of the user. To avoid misuse of the handset, the user who disables the security lock is asked to set the priority value. This is done by selecting a user name from the user list and keying in the associated password. That user name is then used as the default user of the unlocked system. Information about subsequent outgoing calls from any CU will be logged under this default user name.
.

Enabling Security Lock

If the security lock function has been disabled, it can be enabled by users with a priority value of 4 or less:

1. To enter the function menu, press:

2. To select the “Setup” item, press:

3. Find the “Lock” item using:

and press:

4. To select the “Enable” item, press:

5. Find a user name of priority level 4 or less, using:

and press:

6. Enter the password using the numeric keys, and press:

The handset from which the system lock was enabled, is not actually locked before an explicit lock is issued via pressing:

and confirming by

This action can only be carried out if the CU is in idle state. See section “About this Manual” on how to return to idle state.

When the lock is enabled, all **other** control units are automatically locked if they are in idle state (no call in progress and not inside the menu system or phone book). If one of these control units is not in idle state, it is automatically locked when returning to idle state.

Password

A user may change his password at any time. To do so:

1. To enter the function menu, press

2. To select the “Setup” item, press

3. To find the “Password” item, use:

4. To confirm, press:

5. Key in the old password and confirm by pressing

6. Key in the new password and confirm by pressing

7. Re-enter the new password and confirm by pressing

Users

Up to 25 users can be registered in the system by manually creating an entry for each user. Both a user name and a temporary password must be entered for each user.
A user may create, edit, and delete users with a priority value higher than the user’s own priority value.

Adding a New User to the System:

1. To enter the function menu, press:

2. To select the “Setup” item, press:

3. To find the “Users” item, use and confirm by

4. To create a new user, press:

5. Key in the new user name, and confirm by

6. Key in the password, and confirm by

A new user has now been added to the system with a default priority. The priority is one of the properties that can be edited using the procedure described next.

Editing the Properties of an Existing User:

1. To enter the function menu, press:

2. To select the “Setup” item, press:

3. To find the “Users” item, use and confirm by

4. To find the user to be edited, use:

5. To edit the user, press:

6. To go to the user property to be edited, use and confirm by

Deleting an Existing User:

1. To enter the function menu, press:

2. To select the “Setup” item, press:

3. To find the “Users” item, use and confirm by

4. To find the user to be deleted, use:

5. To delete the user, press

6. Confirm by

Call Log

Information about all outgoing calls are logged. Information about the latest 50 outgoing calls can be found in the call log. Furthermore, information about the duration of the last outgoing call can be retrieved.

Viewing the Last Call:

1. To enter the function menu, press:

2. Find the item “Call Log” using and confirm by

3. Find the item “Last Call” using and confirm by

Viewing the Last Private Call Log:
The call log for the current user can be retrieved as shown in the following:

1. To enter the function menu, press:

2. Find the item “Call Log” using and confirm by

3. Find the item “Private” using and confirm by

4. Find the item “Outgoing” using and confirm by

A list showing the phone numbers of the outgoing calls made by the current user now appears on the display.

To see more details about a specific call, find the call using

and confirm by

The total account of the current user can be retrieved by choosing “Account” instead of “Outgoing” at step 4.

Viewing the Global Call Log:
The global call log for all users in the system can be retrieved as shown in the following:

1. To enter the function menu, press

2. Find the item “Call Log” using and confirm by

3. Find the item “Global” using and confirm by

A list of all outgoing calls made from the system can now be retrieved by choosing the item “Outgoing” and pressing

To see more details about a specific call, find the call using

and confirm by

Alternatively, the account of each user can be retrieved as shown below:

1. Follow steps 1-3 above.

2. Find the item “Account” using and confirm by

The available items are now:

```
>Users
 Phone
 Unknown
 Deleted Users
```

To select e.g. a specific user, choose “Users” and press

Now, find the user by means of and press

Setting Time and Date

Time and date can be displayed and adjusted manually. The time is used in the call log. Adjusting the time requires that the user is identified with a priority value of 4 or less (Commander, Captain, or SUPER USER).

1. To enter the function menu, press:

2. Go to the “System” item using:

   and press:

3. Go to “Time/date” using:

   and press:

You can now choose between “Status”, “Set”, “System update”, and “GPS update”

```
DATE-TIME
>Status
 Set
 Sys.update
```

Status: Shows current time and date (from system).

Set: Allows you to edit time and date manually, using the numeric keys.

Sys. update: If this option is chosen, the time written in the display is updated using only the internal circuitry of the RTU itself. Consequently, if your Iridium system is turned off and the on again, the clock will be reset to a default time. The correct time must then be set again manually each time.

GPS update: If this option is chosen, the time written in the display is updated using the connected GPS, if any. Consequently, even if your Iridium system is turned off and then on again, the clock will still be adjusted to the correct time each time a GPS update is received. If no GPS is available, it makes no sense choosing this option.

Setting Dimmer and Contrast

To adjust the background light and the contrast level, first press the two keys:

The **dimmer/contrast** menu appears:

```
DIM/CONTRAST
>Dimmer
 Contrast
```

Now, move to the desired item – **dimmer** or **contrast** – by means of:

Then, to select the item, press:

An Example

When you select **dimmer** in the **dimmer/contrast** menu, the display shows the **dimmer** menu:

```
DIMMER
>On
 Off
 Level
```

To enable or disable the light, select the **On** or **Off** item respectively. To adjust the dimmer level, select the **Level** item.

Then, to increase or decrease the dimmer level, use:

For the changes to take effect, press:

The **dimmer/contrast** menu may also be entered via the “Setup” menu as follows:

1. To enter the function menu, press:

2. To select the “Setup” item, press:

3. Find the “Light” item using and press:

GPS

Via this menu item, it is possible to obtain the geographical position in terms of longitude and latitude if an optional GPS receiver is connected via the transceiver. If this is the case, the position is available by going through the following steps:

1. To enter the function menu, press:

2. To select the “Setup” item, press:

3. Find the “GPS” item using and press:

Display

For each handset, the user may select the information to be shown in the display when the handset is in idle state. However, the state of the system will always be shown in the display. The available choices are:

- **Time/date**: Both the time (hours, minutes, seconds) and the date is shown.
- **Time**: Only the time (hours and minutes) is shown.
- **Position**: If a GPS receiver is connected to the transceiver, choosing “Position” will show the geographic position in terms of latitude and longitude.
- **State only**: Only the state of the transceiver is shown.

If for instance you want to choose time/date;

1. To enter the function menu, press:

2. To select the “Setup” item, press:

3. Find the “Display” item using and press:

4. Find the “Time/date” item using and press:

To see the effect, exit the menu system.

SIM Card Handling

Your Iridium equipment monitors the SIM card status. The status information is shown in the display of each handset in idle state.

SIM Card Messages

As long as one of the following messages are seen in the display, the SIM card currently inserted in the RTU cannot be used for making external outgoing calls.

- **SIM card blocked**: This message indicates that a wrong pin code has been entered three times in a row with the current SIM card inserted into the transceiver. To unblock the SIM card, enter the correct PUK1 code.

- **Card blocked permanently**: This message indicates that a wrong PUK1 code has been entered ten times in a row. The SIM card is now permanently blocked and cannot be unblocked.

- **Check SIM card**: This message indicates that your Iridium equipment has detected that some item has been inserted into the SIM card slot. It has not, however, recognized this item as a SIM card.

- **SIM card defective**: This message indicates that your Iridium equipment has detected that a SIM card has been inserted into the SIM card slot. For some reason, however, the Iridium equipment cannot communicate with the SIM card.

- **SIM card validation**: This message indicates that a valid SIM card has been inserted into the SIM card slot, and that the pin code just entered is being validated by the Iridium system.

NOTE: ***The following features for sim card handling are only available with RTU software version 3.0.0 and higher.***

Enabling and Disabling PIN Codes

Each SIM card has an associated PIN code. In order to prevent unauthorized use of SIM cards, your Iridium equipment is capable of enabling and disabling the associated PIN codes.

When the PIN code from a given SIM card is enabled, the user must enter the current value of this PIN code each time the SIM card is re-entered into the SIM card holder in the RTU. When the PIN code for a given SIM card is disabled, the SIM card can be used for making external outgoing calls, provided that it is not defect or blocked.

Enabling the PIN Code

1. To enter the function menu, press:

2. Find the “System” item using:

and press:

3. Find the “SIM Card” item using:

and press:

4. Find the “PIN enable” item using:

and press:

5. Key in the PIN code and press:

Disabling the PIN code
Follow steps 1 – 5 above with the following substitution:

4 Find the “PIN disable” item using:

and press:

Entering the PIN Code

Each time a valid SIM card with an enabled PIN code is inserted into the SIM card holder, the current value of the associated PIN code must be entered using the alphanumeric keys. The PIN code must be a number consisting of 4 to 8 digits.

In order to enter the PIN code, do the following:

1. Key in the 4-8 digit PIN code and press:

Changing the PIN Code

1. To enter the function menu, press:

2. Find the “System” item using:

and press:

3. Find the “SIM Card” item using:

and press:

4. Find the “Change PIN” item using:

and press:

5. Enter the current PIN code and press:

6. Enter the new PIN code and press:

7. Reenter the new PIN code and press:

Unblocking a Blocked SIM Card

If a wrong PIN code has been entered 3 times in a row, the RTU blocks the SIM card. If a blocked SIM card is inserted into the SIM card holder or if a SIM card already in the SIM card holder is blocked, the display will show “SIM Card blocked” when the CU is in idle state. In order to unblock a blocked SIM card:

Follow step 1 – 3 above.

4. Find the “PUK Code” item and press:

5. Enter the correct PUK code and press:

6. Enter a new 4-8 digit PIN code and press:

7. Re-enter the new PIN code and press:

Ringing Tone

When configuring each handset, the user can choose among a number of different ringing tones.
The procedure is to choose one of the following 4 ringing tones:

- Deep
- High
- Alternating slowly
- Alternating fast

The ringing tone for internal incoming calls as well as the ringing tone for external incoming calls are both affected by this single choice. Therefore they cannot be set independently.

For **external** incoming calls, resulting tones are respectively:

- Deep
- High
- Alternating slowly
- Alternating fast

For **internal** incoming calls (local calls), the resulting tones are respectively:

- Deep dual
- High dual
- Deep dual
- High dual

As mentioned above, choosing a ringing tone affects both the external incoming ringing tone and the internal incoming (local call) ringing tone according to the following table:

Choice of ringing tone	External incoming calls	Internal incoming calls
Deep	Deep	Deep dual
High	High	High dual
Alternating slowly	Alternating slowly	Deep dual
Alternating fast	Alternating fast	High dual

An **internal incoming call** (local call) can always be recognized by two equal consecutive tones (hence the term “dual” in the table) followed by a pause. The tones may be deep or high.

An **external incoming call** can always be recognized by a single continuous sound sequence (deep, high, alternating slowly or alternating fast), followed by a pause.

An **example:** To set the external incoming ringing tone to alternating slowly, and the internal incoming ringing tone to deep dual (remember that they cannot be set independently as described above):

1. To enter the function menu, press:

2. To select the “Setup” item, press:

3. Find the “Ring tone” item using and press:

4. Find the “Slow alt.” item using and press:

Extension

At any time, each handset is uniquely characterised by an extension number. That is, only one handset at a time may have a given extension number. The extension numbers may be changed, but no two handsets can have the same extension number simultaneously. To change the extension number of a handset do the following:

1. To enter the function menu, press:

2. To select the “Setup” item, press:

3. Find the “Extension” item using and press:

4. Key in a number below 10,000 that is not in use by any other control unit, and press:

Call Answer

If your Iridium equipment includes more than one control unit or a control unit and a PSTN telephone, you may configure the answering of external incoming calls in a number of different ways. The available choices are:

- **One CU**: Choosing this option, you must specify the extension of the control unit to which you want external incoming calls to be directed automatically.
- **PSTN**: If there is a PSTN telephone connected to your Iridium equipment, selecting this option will direct external incoming calls to your PSTN telephone.
- **All**: Choosing this option will make all control units and the PSTN telephone (if any) ring when your Iridium equipment receives an external incoming call. Any of these units may be used for answering the call.

An example: If you want all external incoming calls to be directed to a control unit with the extension number 1001:

1. To enter the function menu, press:

2. Find the item “System” using and press:

3. Find the item “Call Answer” using and press:

4. Find the item “One CU” using and press:

5. Find the extension number of the handset to which you want all external incoming calls to be directed, using

   and press:

Alternatively, if you want to direct external incoming calls to your PSTN telephone (if any), follow steps 1-3 above, and proceed as follows:

4. Find the item “PSTN” using and press:

5. Press again to confirm that external incoming calls should be directed to the PSTN telephone.

Call Forwarding

***NOTE:* This feature is only available with RTU software version 3.0.0 and higher.**

The Iridium network offers the possibility of forwarding incoming calls to another phone number. This facility can be configured from your Iridium equipment. The call forwarding can be divided into the following two categories:

- **Forward all calls:** All external incoming calls will immediately be forwarded to the number you specify when you activate this category.
- **Forward on not reachable:** When your Iridium equipment has been turned off or cannot for some reason be contacted by the network or when the line of your Iridium equipment is occupied, either by an internal or an external call, external incoming calls will be forwarded to the number you specify when you activate this category.

Note: By default, the above two categories of calls will all be forwarded to your personal mailbox. When you activate a category, the calls in this category will be forwarded to the number that you specify and no longer to your personal mailbox.

In the following, the procedures for activating, restoring and reviewing settings for the above two categories are described. As usual, when manually dialing a number to call, this must be done from idle state.

Forwarding all Calls

Activate:

1. Hook off
2. 0 SHIFT * SHIFT * EDIT DEF 2 EDIT ABC 1 SHIFT * SHIFT * 0 0

   [country code] [telephone number] SHIFT * OK # OK #

Deactivate:

1. Hook off
2. 0 SHIFT * OK # EDIT DEF 2 EDIT ABC 1 SHIFT * OK # OK #

Forwarding on no Answer

Setting a new number to forward to:

1. Hook off
2. 0 SHIFT * SHIFT * 0 0 REDIAL JKL 4 SHIFT * SHIFT * 0 0

   [country code] [telephone number] SHIFT * OK # OK #

Reactivaiting forwarding to personal mailbox:

1. Hook off
2. 0 SHIFT * SHIFT * 0 0 REDIAL JKL 4 SHIFT * SHIFT * 0 0

   [personal mailbox retrieval number] SHIFT * OK # OK #

Reviewing the number to forward to:

1. Hook off
2. 0 SHIFT * SHIFT * SHIFT * OK # PQR 6 DIM STU 7 SHIFT * OK # OK #

Voice Mail

***NOTE:** This feature is only available with RTU software version 3.0.0 and higher.*

Voice mail allows callers to leave a voice message in your personal mailbox. As described in section “Call Forwarding”, by default external incoming calls are forwarded to your personal mailbox if the call is not answered, if your equipment is switched off, if your Iridium system is occupied by an internal or external call or cannot, for some reason, be contacted by the Iridium network. Therefore these calls will be forwarded to your personal mailbox unless you set a new telephone number to transfer to.

You may record a personal greeting which the callers will hear when they are forwarded to your mailbox. After hearing your personal greeting, callers can leave a voice mail message which is stored in your mailbox.

Your personal mailbox has a lot of features which can be configured by you. The caller also has a number of facilities to choose between when forwarded to your mailbox. See the “Iridium Services User Guide” that comes together with your Iridium equipment.

Call Barring

***NOTE:** This feature is only available with RTU software version 3.0.0 and higher.*

Call barring allows you to bar either all external incoming or all external outgoing calls. If you bar external incoming calls, your Iridium equipment will not receive external incoming calls. If you bar external outgoing calls, nobody will be able to place external outgoing calls from your Iridium equipment

Note: External incoming calls will not be sent to your personal mailbox if call barring of external incoming calls is active.

Before activating call barring, **disable all types of call forwarding:**

1. Hook off
2. 0 SHIFT * OK # 0 0 EDIT DEF 2 SHIFT * OK # OK #

Reactivating call forwarding and restoring your previous settings:

1. Hook off
2. 0 SHIFT * SHIFT * 0 0 REDIAL JKL 4 SHIFT * OK # OK #

Barring external incoming calls:

Activate:
1. Hook off
2. 0 SHIFT * SHIFT * DEL GHI 3 MNO 5 SHIFT * SHIFT * [password] SHIFT * OK # OK #

Deactivate:
1. Hook off
2. 0 SHIFT * OK # DEL GHI 3 MNO 5 SHIFT * SHIFT * [password] SHIFT * OK # OK #

Barring external outgoing calls:

Activate:
1. Hook off
2. 0 SHIFT * SHIFT * DEL GHI 3 DEL GHI 3 SHIFT * SHIFT * [password] SHIFT * OK # OK #

Deactivate:
1. Hook off
2. 0 SHIFT * OK # DEL GHI 3 DEL GHI 3 SHIFT * SHIFT * [password] SHIFT * OK # OK #

If you want to change the call barring setting you must enter your password. The initial password will be supplied by your service provider.

Changing Your password :

1. Hook off

2. 0 SHIFT * SHIFT * 0 DEL GHI 3

SHIFT * SHIFT * DEL GHI 3 DEL GHI 3 0

SHIFT * SHIFT * [old password] SHIFT * [new password]

SHIFT * SHIFT * [new password] SHIFT * OK # OK #

Call Waiting

***NOTE:** This feature is only available with RTU software version 3.0.0 and higher. Contact your service provider to find out when this feature will become available.*

Call waiting allows you to answer an external incoming call while you are connected to another external number.

Activate:

1. Hook off
2. 0 SHIFT * SHIFT * REDIAL JKL 4 DEL GHI 3

   SHIFT * OK # OK #

Deactivate:

1. Hook off
2. 0 SHIFT * OK # REDIAL JKL 4 DEL GHI 3

   SHIFT * OK # OK #

To put the current call on hold and answer a second call:

EDIT DEF 2 OK #

To switch between two calls:

EDIT DEF 2 OK #

Call Hold

***NOTE:** This feature is only available with RTU software version 3.0.0 and higher. Contact your service provider to find out when this feature will become available.*

Putting a call on hold allows you to place a second call without ending the first.

To put the current call on hold and place a second call:

Put the current call on hold: EDIT DEF 2 OK #

Place the second call: [telephone number to call] OK #

To switch between two calls: EDIT DEF 2 OK #

To end the current call and return to the held call: EDIT ABC 1 OK #

To end both calls:

To combine both calls creating a conference call: DEL GHI 3 OK #

Conference Calling

***NOTE:** This feature is only available with RTU software version 3.0.0 and higher. Contact your service provider to find out when this feature will become available.*

You can link up to 6 parties, including yourself, to a conference call.

To create a conference call:

Activate:

1. Hook off
2. Establish a call to the first party.

For each new party to add to the conference call, do the following:

3. EDIT DEF 2 OK # [telephone number of next party]

OK # DEL GHI 3 OK #

To end the conference call, press:

Software Version

Primarily for service purposes, it is possible to get information about the version of the software for the following pieces of hardware in your Iridium equipment:

- **Transceiver**: This software handles the configuration of your Iridium equipment, audio routing, the information to be shown on the displays, communication with your SIM card, etc.
- **LBT**: This software handles the communication between the global Iridium network and your Iridium equipment.
- **Control Unit (CU):** This software consists of low level drivers (for each control unit) that control the dot matrix display, the key pad, the status indicator lamps, and the microphone, earpiece and speaker.

To get information on these software modules, go through the following steps:

1. To enter the function menu, press: MENU
2. Find the item “System” using and press: OK #
3. Find the item “SW version” using and press: OK #
4. Choose the hardware whose software version you want information on, using and press: OK #

Resetting

Primarily for service and test purposes, it is possible to reset your Iridium equipment to force it into a well-defined state. The following two different levels of resetting are available:

- **Restart**: No configuration information or user data (call log, user list, phone book) are deleted. When this command is issued/ chosen, all control units are forced back to idle state regardless of their current state.
- **Factory reset**: ***NOTE!*** **ALL (!)** configuration information **AND (!)** user data (call log, user list, phone book) are deleted. When this command is issued, your Iridium equipment returns to the state it was in when leaving the factory.

To restart your system:

1. To enter the function menu, press: MENU
2. Find the item “System” using and press: OK #
3. Find the item “Reset” using and press: OK #

4. Find the item “Restart” using and press:

5. To confirm that you want to restart the equipment, press:

Tone Signalling

The system will give you information on its status as well as instructions by means of tone signalling. This is done on four different frequencies: 450, 900, 1440 and 1800 Hz. Appendix A illustrates what the various tone signalling sounds like.

Appendix A

Tone Signalling

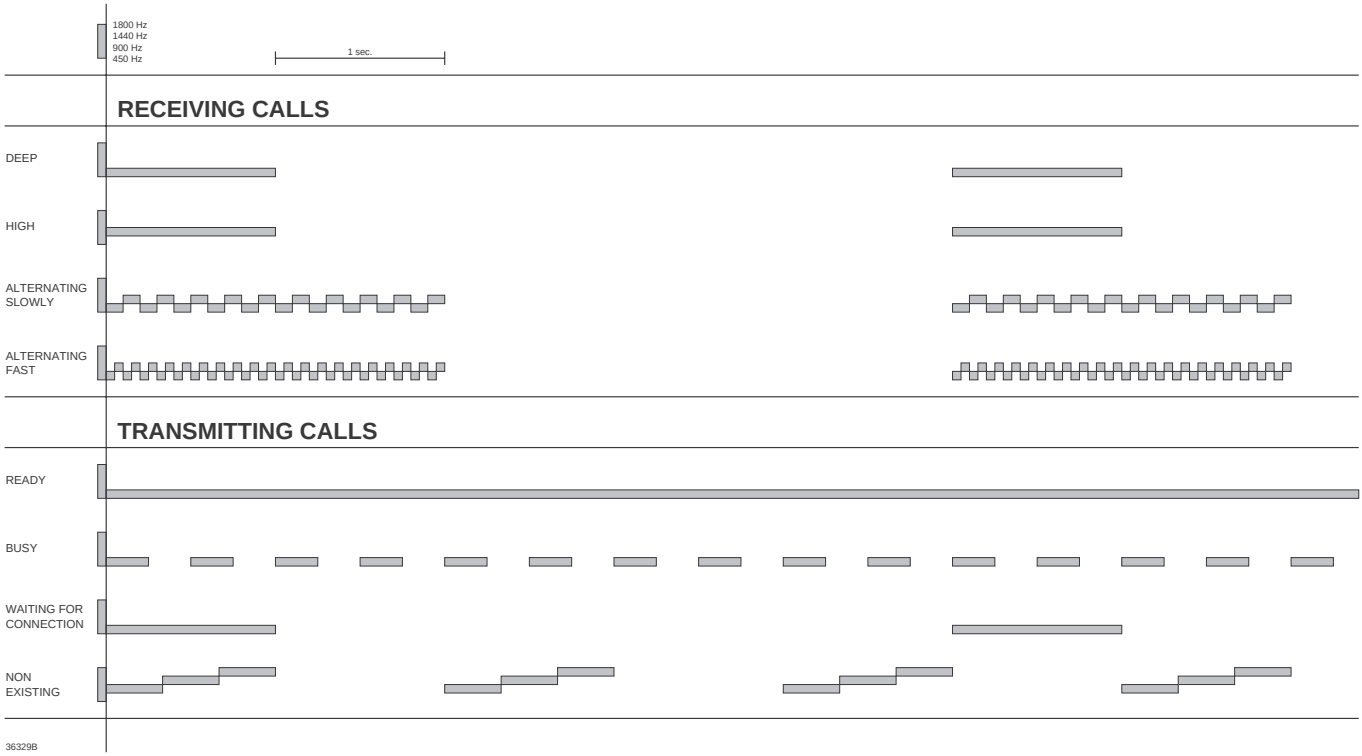

Appendix B

Function Menu Overview

To access the function menus, press:

To move about in the menus, use the arrow keys:

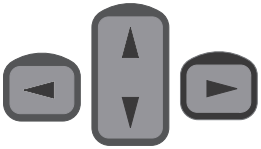

To confirm that you want to select an item, use the OK key:

To regret the last step, use the Escape key:

Functions marked with an asterisk (*) concern the specific handset. All other functions are global, i.e. they concern the whole system. The following table contains a total list of the entries in the function menu system.

Menu	1st submenu	2nd submenu	3nd submenu	Action
Setup	Ringing tone	Deep		Sets ringing tone to deep (see Appendix A).
		High		Sets ringing tone to high (see Appendix A).
		Slow alt.		Sets the ringing tone to alternating slowly (see Appendix A).
		Fast alt.		Sets the ringing tone to alternating fast (see Appendix A).
	Ring test	External		Generate external ringing tone in order to test the setting of this sound.
		Internal		Generate internal ringing tone in order to test the setting of this sound.
	Ring vol. (*)			Sets the volume of the ringing tone.
	Speaker vol. (*)			Sets the speaker volume.
	Key beep (*)	Enable		Turns on the key beep function: When a key is pressed, a beep is heard.
		Disable		Turns off the key beep function: When a key is pressed, no beep is heard.
		Volume		Sets the volume of the beep heard when a key is pressed.
	Lock	Enable		Requires users to log in. When selecting this function, the user is prompted to log in.
		Disable		Does not require users to log in. This function can only be selected by users with certain priorities. When selecting the function, the user is asked to state a default user priority level that decides what all users will be allowed to do. This default priority level cannot be higher than that of the user disabling the lock.
	Password			Sets the current user's password.
	Users	Userlist + Add		Browses the user list, and adds new users, entering names and passwords.
		Userlist + Edit	Name	Browses the user list, and edits user names.
			Password	Browses the user list, and edits user passwords.
			Priority	Browses the user list, and edits user priorities.
			Clear account	Browses the user list, and clears user account records.
		Userlist + Del.		Browses the user list, and deletes users from the list.
	Extension (*)			Selects the extension number of the current handset.
	Transfer (*)	Enable		Enables the auto transfer function.
		Disable		Disables the auto transfer function.
		Extension		Selects the extension number(s) to which calls are to be transferred.
		Delay Time		Selects the delay time before a call is transferred.
	GPS			Shows the current position.
	Display (*)	Time/date		Displays the time and date when the handset is idle.
		Time		Displays the time (hour and minute) when the handset is idle.
		Position		Displays the position when the handset is idle.
		State only		Displays only the state of the system when the handset is idle.
	Light	Dimmer	On	Turns the display backlight on
			Off	Turns the display backlight off
			Level	Adjusts the level of the display backlight
		Contrast		Adjusts the display contrast
Call log	Global	Outgoing	Userlist	Browses the log of all outgoing calls.
		Account	Users	Browses the user list, and shows the accounts of selected users.
			Phone	Shows the account of the PSTN phone.
			Del. Users	Shows the accounts of deleted users.
			Unknown	Shows the accounts of unknown users.
	Private	Outgoing		Browses the log of the current user's calls.
		Account		Views the current user's account.
	Last call			View the duration of the last call

System			
	Time/date	Show	Shows the time and date.
		Set	Sets the time and date.
		Sys.update	Sets the system to update the time and date.
		GPS update	Sets the GPS to update the time and date.
	SW versions	Transceiver	Displays the software version number of the transceiver.
		LBT	Displays the software version number of the LBT.
		Ctrl unit	Displays the software version number of the handset.
	Call answer	Status	Shows the status of Call Answer, i.e. who is set to receive incoming calls.
		All	Incoming calls go to all control units and the PSTN phone.
		One CU	Incoming calls go to a specific control unit.
		PSTN	Incoming calls go to the PSTN phone.
	SIM Card	PIN enable	Enable PIN code
		PIN disable	Disable PIN code
		Change PIN	Change PIN code
		PUK code	Enter PUK code
	Reset	Restart	Restarts the system (works like switching the power off and on again).
		Factory res	Restarts the system and reloads all factory settings.

Dimmer/Contrast Menu

To access the dimmer/contrast function menu, press:

Menu		Action
Dimmer	On	Turns the display backlight on.
	Off	Turns the display backlight off.
	Level	Adjusts the level of the display backlight.
Contrast		Adjusts the display contrast.

SAILOR ® · Porsvej 2 · PO Box 7071 · DK-9200 Aalborg SV · Denmark
Phone: +45 9634 6100 · Fax: +45 9634 6101 · Telex: 69789 ECI DK
E-mail: sailor@sailor.dk · Web: www.sailor.dk