Product Specification

INT NODE HP

Index

1. Summary 3
2. Product Specification 3
3. Antenna Characteristic 4
4. Block Diagram 5
5. Main function 5
6. System Configuration 6

1. Summary

It defines the part of the circuit INT NODE V0.2 HP.

2. Product Specification

2.1 Electrical Specification

Type No.	Description
Input Voltage	DC 5~48V(Typ.15V)
Power consumption	About 45mA@15V/ Max. 0.7W
Protocol	IEEE 802.15.4 / Zigbee Pro
Frequency	2.4 GHz (ISM band: International) / 2400 … 2480 MHz, (16Channel)
RF Tx Power	Max. +20dBm (Typ. 18dBm)
RF Rx sensitivity	-96dBm
Data rate	250kbps
Dim interface	0-10 V DC
ADC Input Level	0 ~ 1.5V
Interface	UART1(Debug & Download)
Dimensions (W x L)	45x35 mm
Antenna	IFA, Gain 2dBi

2.2 Environmental Specification

Item	Specification
Operating Temp. Range	-30℃ ~ +70℃ /IEC 60068-2-1 Ab
Storage Temp. Range	-40℃ ~ +70℃ /IEC 60068-2-2 Bb
Operating Humidity	5% ~ 95% (No dew condensation) /IEC 60068-2-56

3. Antenna Characteristic

- Horizontal

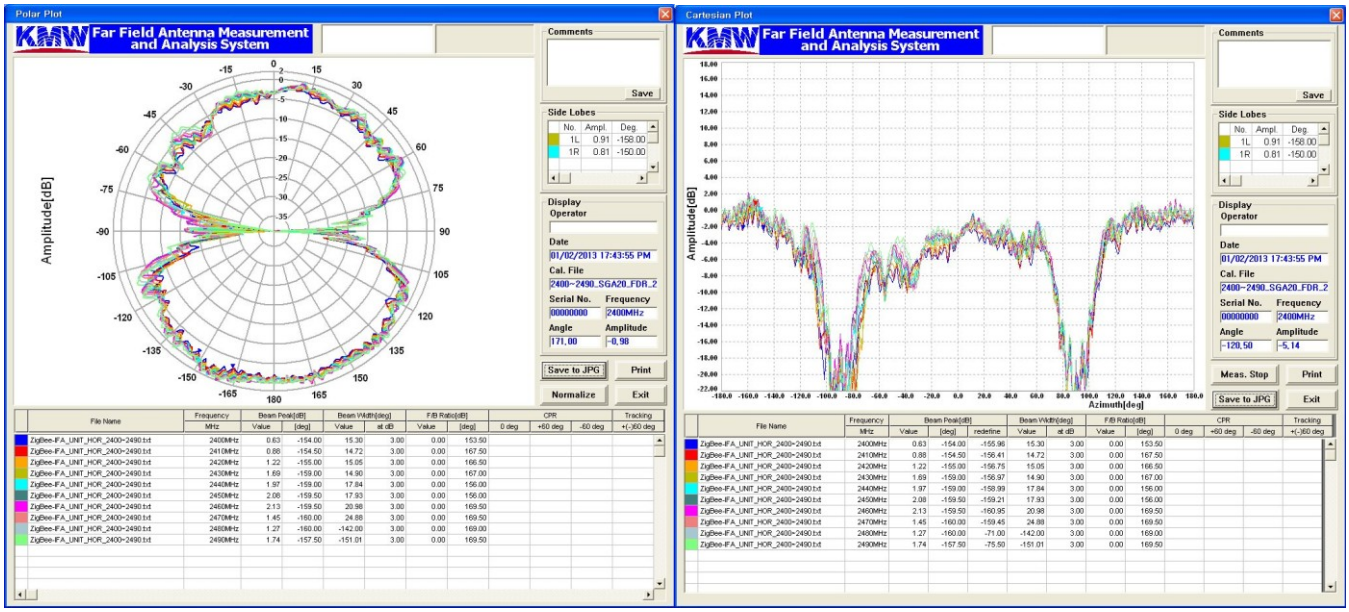

- Vertical

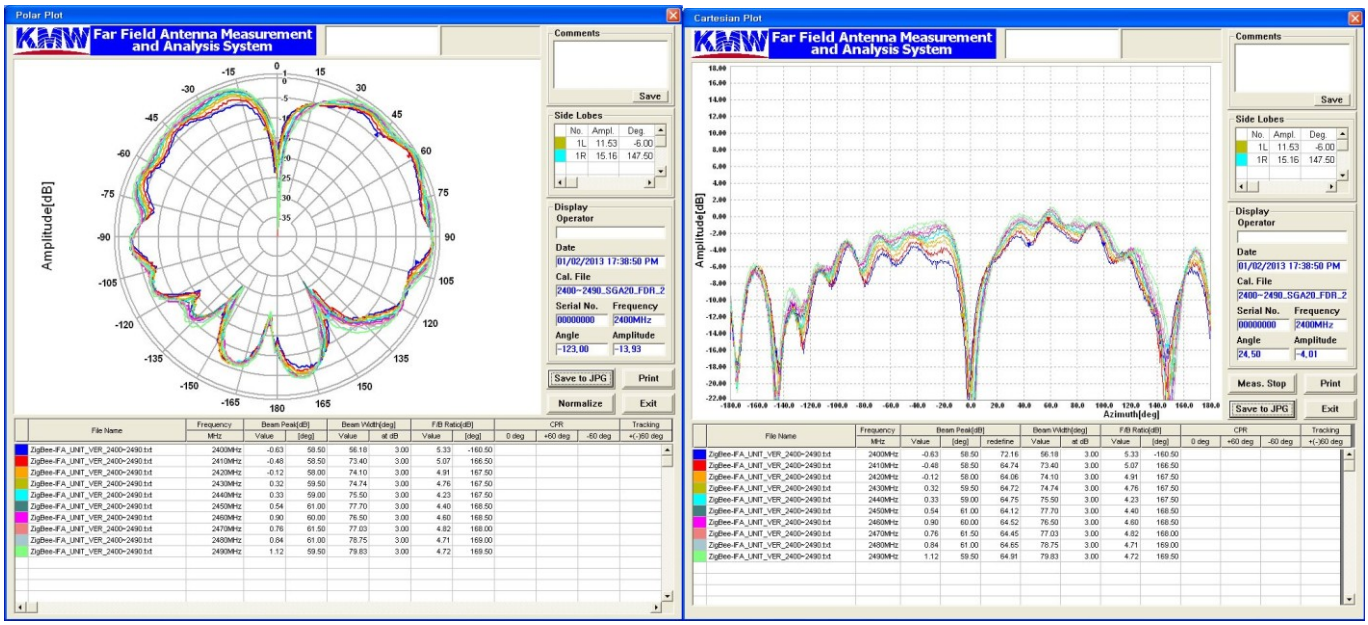

4. Block Diagram

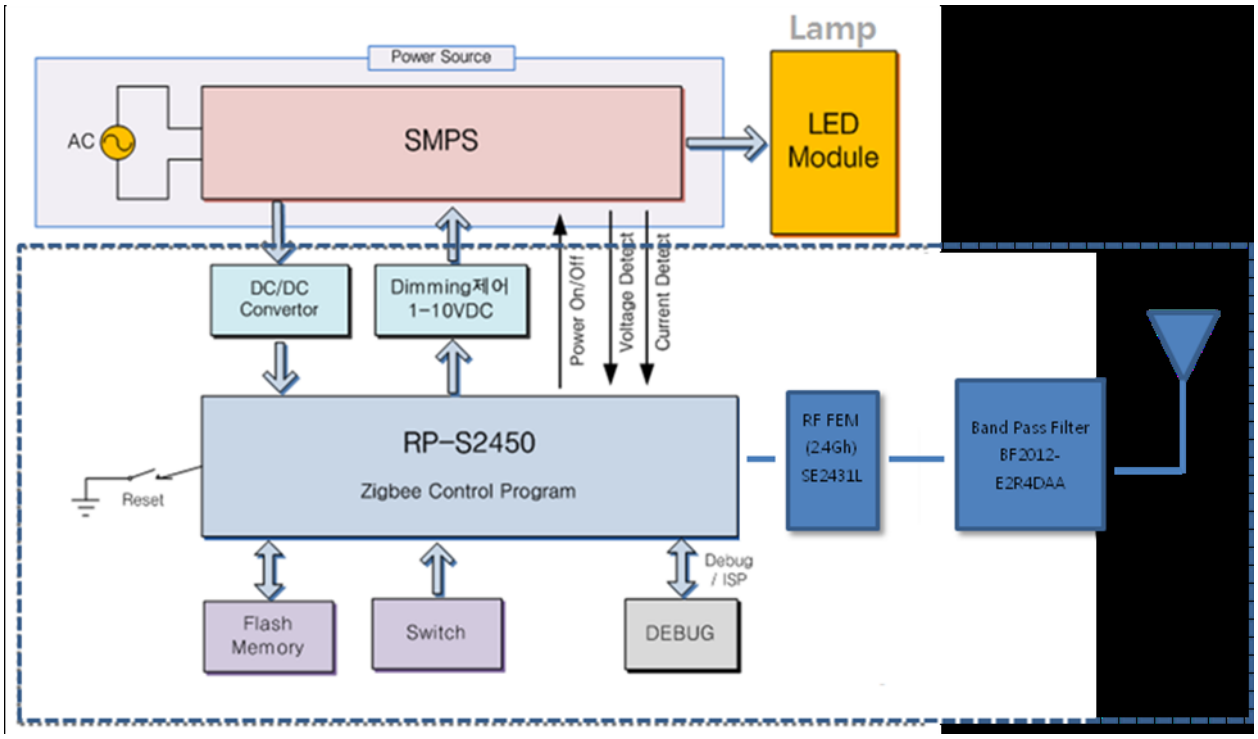

[INT Node HP block diagram]

5. Main function

5.1. Dimming control using PWM.

5.2. Real-time monitoring and control with Zigbee wireless communication

5.3. Gateway notified when an alarm occurs in the lamp.

5.4. Download using the debug port and remote.

6. System Diagram

6.1 LCS System Block Diagram

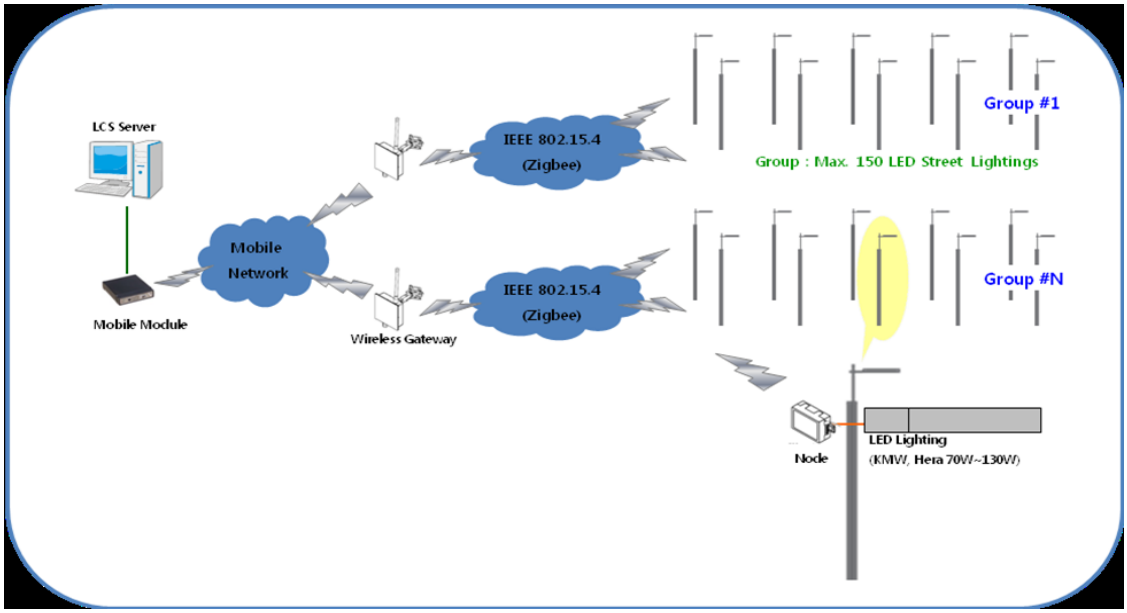

< LCS System Block Diagram>

6.2 Zigbee Network Configuration

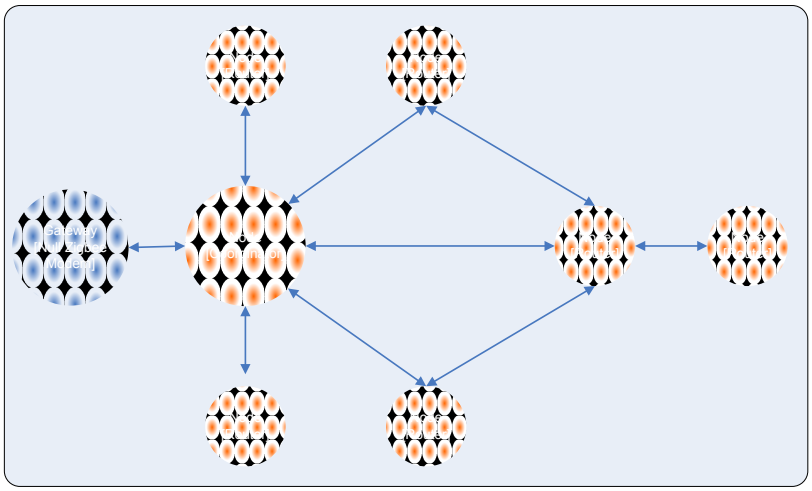

<Zigbee Mesh Topology Diagram>

FCC compliance Information

FCC Information to User

This equipment has been tested and found to comply with the limits for a Class B digital device, pursuant to Part 15 of the FCC Rules. These limits are designed to provide reasonable protection against harmful interference in a residential installation. This equipment generates, uses and can radiate radio frequency energy and, if not installed and used in accordance with the instructions, may cause harmful interference to radio communications. However, there is no guarantee that interference will not occur in a particular installation. If this equipment does cause harmful interference to radio or television reception, which can be determined by turning the equipment off and on, the user is encouraged to try to correct the interference by one of the following measures:

- Reorient or relocate the receiving antenna.
- Increase the separation between the equipment and receiver.
- Connect the equipment into an outlet on a circuit different from that to which the receiver is connected.
- Consult the dealer or an experienced radio/TV technician for help.

Caution

Modifications not expressly approved by the party responsible for compliance could void the user's authority to operate the equipment.

FCC Compliance Information : This device complies with Part 15 of the FCC Rules. Operation is subject to the following two conditions: (1) This device may not cause harmful interference, and (2) this device must accept any interference received, including interference that may cause undesired operation
Including interference that may cause undesired operation. Modifications not expressly approved by the manufacturer could void the user's authority To operated the equipment under FCC rules. To satisfy FCC exterior labeling requirements, the following text must be placed on the exterior of the end product.

Contains Transmitter Module FCC ID : ORI-INT-NODE-HP

CAUTION : This device and its antenna(s) must not be co-located or operated in conjunction with any other antenna or transmitter. End users cannot modify this transmitter device. Any unauthorized modification could void the user's authority to operate this device.

This module is limited to installation in fixed applications, and only installed Lighting Fixture. This module can not be attached to other device without Lighting device.

IMPORTANT NOTE:

FCC RF Radiation Exposure Statement:

This equipment complies with FCC RF radiation exposure limits set forth for an uncontrolled environment. This equipment should be installed and operated with a minimum distance of 20 centimeters between the radiator and your body.This transmitter must not be co-located or operating in conjunction with any other antenna or transmitter.

This device is intended only for OEM integrators under the following conditions:

1)The transmitter module may not be co-located with any other transmitter or antenna,

2)OEM shall not supply any tool or info to the end-user regarding to Regulatory Domain change.

As long as 2 conditions above are met, further transmitter test will not be required. However, the OEM integrator is still responsible for testing their end-product for any additional compliance requirements required with this module installed (for example, digital device emissions, PC peripheral requirements, etc.).

IMPORTANT NOTE: In the event that these conditions can not be met (for example certain laptop configurations or co-location with another transmitter), then the FCC authorization is no longer considered valid and the FCC ID can not be used on the final product. In these circumstances, the OEM integrator will be responsible for re-evaluating the end product (including the transmitter) and obtaining a separate FCC authorization.

Manual Information To the End User The OEM integrator has to be aware not to provide information to the end user regarding how to install or remove this RF module in the user's manual of the end product which integrates this module. The end user manual shall include all required regulatory information/warning as show in this manual.