SPES2

IT Converged LED Lighting

Installation Guide

Document Revision – V0.71_E

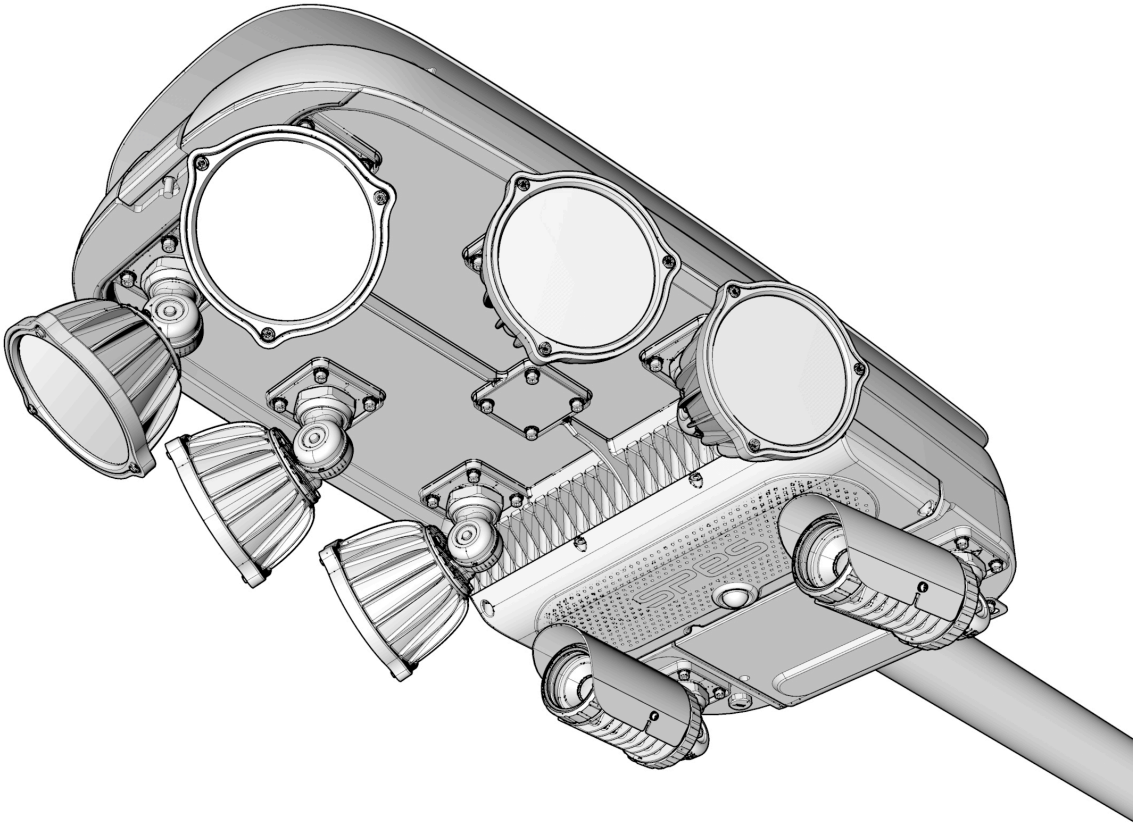

⏏ SPES2

Safety precautions

1. Electrical work must be performed by a qualified licensed electrician.
2. Disconnect or turn off power before installation or servicing.
3. Do not take apart or modify the product.
4. Do not drop the product or apply a strong impact to it.
5. The manufacturer or the seller do not bear liability for damage caused by inappropriate use or application.
6. Contact the manufacturer or the seller for inquiry when there is a problem with the product.

If the external flexible cable or cord of this luminaire is damaged, it shall be exclusively replaced by the manufacturer or his service agent or a similar qualified person in order to avoid a hazard.

This device complies with Part 15 of the FCC Rules.

Operation is subject to the following two conditions:
(1) This device may not cause harmful interference, and
(2) this device must accept any interference received, including interference that may cause undesired operation.

CAUTION : Any Changes or modifications not expressly approved by the manufacturer could void the user's authority to operate the equipment.

GigaTera®
beyond the light

GigaTera®
beyond the light

KMW INC.
183-6, Yeongcheon-ro, Dongtan-myeon, Hwaseong-si, Gyeonggi-do, South Korea
Tel : +82-31-370-8866 / E-Mail : ledsales@gigateraled.com / Homepage : www.gigateraled.com

Installation Guide
SPES2

IT Converged LED Lighting

Product Dimension

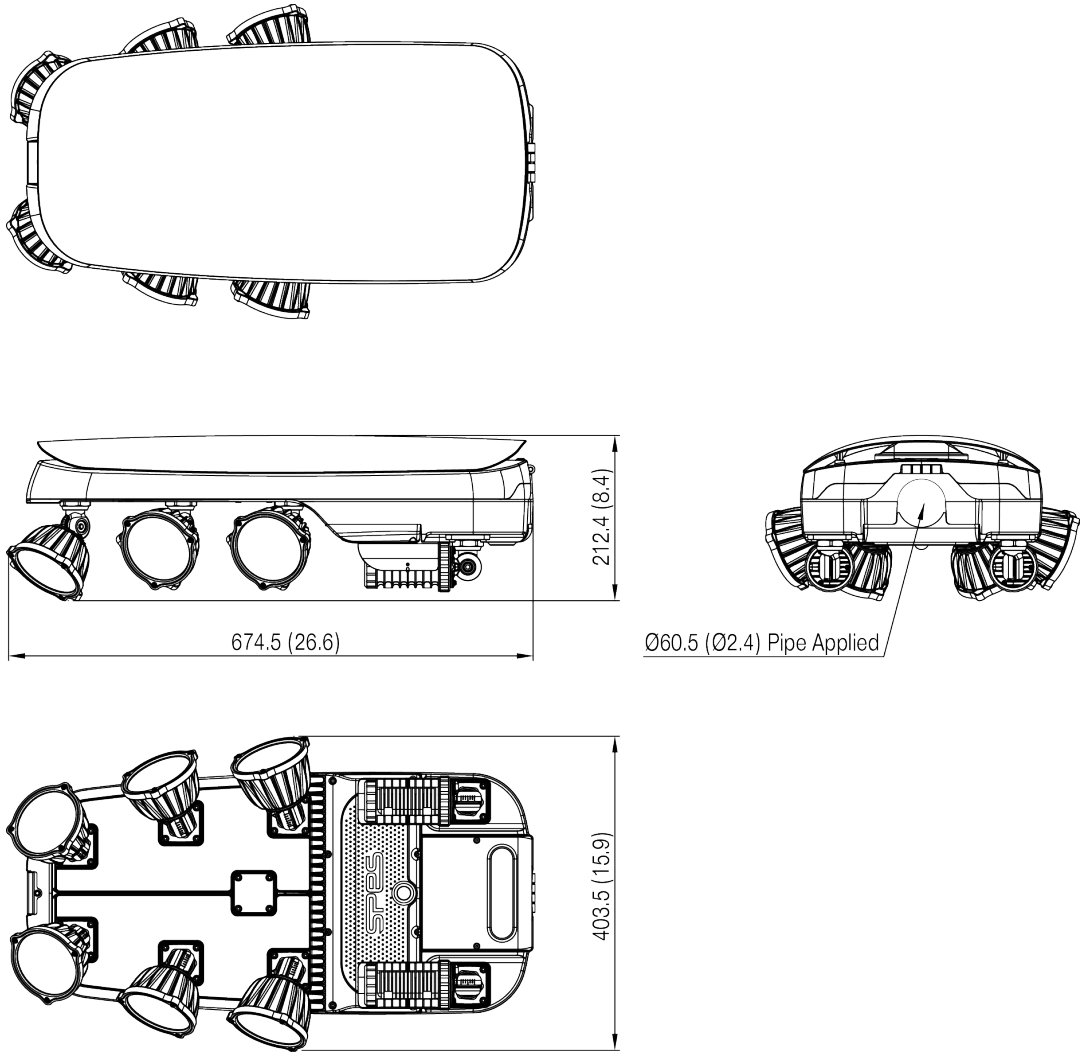

674.5 x 403.5 x 212.4 (mm) / 26.6 x 15.9 x 8.4 (inch)
13.0 Kg / 28.7 lb

Note

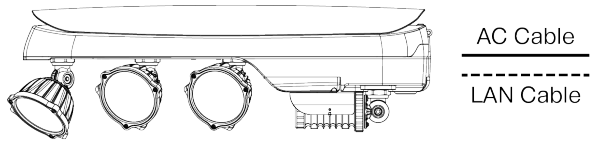

Master SPES

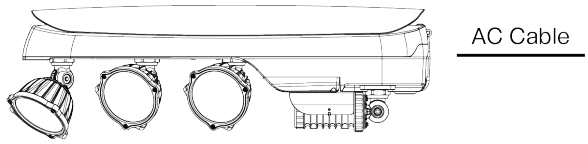

Slave SPES

Master SPES : AC Cable / LAN Cable	Slave SPES : AC Cable
*For the Master SPES, wire both the AC power line and LAN cable.	* For the Slave SPES, wire only the AC power line.

GigaTera®
beyond the light

KMW INC.
183-6, Yeongcheon-ro, Dongtan-myeon, Hwaseong-si, Gyeonggi-do, South Korea
Tel : +82-31-370-8866 / E-Mail : ledsales@gigateraled.com / Homepage : www.gigateraled.com

Installation Guide
SPES2

IT Converged LED Lighting

Diagram

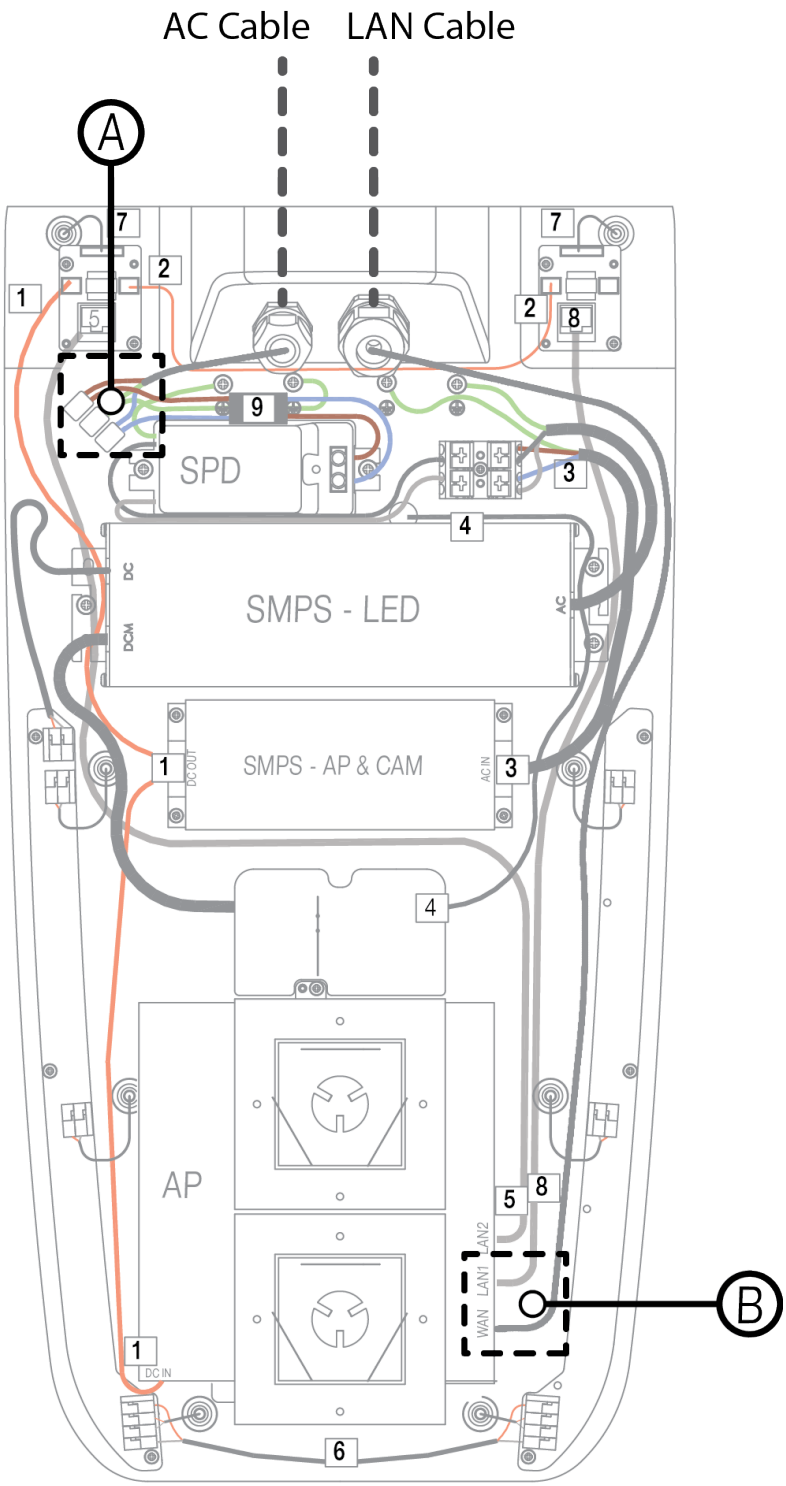

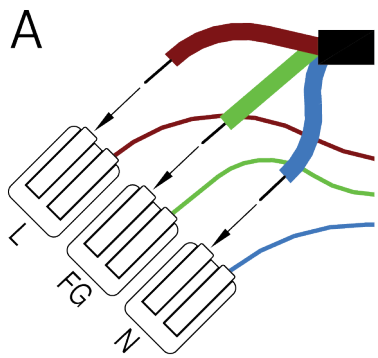

AC Power Connect

Wire Range : AWG12 ~ AWG28
AC –L : Black or Brown
AC – N : White or Blue
FG : Green + Yellow

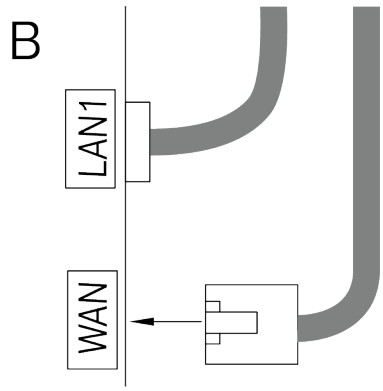

WAN Connect

Connector : RJ45 male

Do not connect the WAN cable when installing the slave SPES

1. SMPS to AP
2. CAM IF to CAM IF
3. AC to SMPS AC_IN
4. Mot. Sensor to Node
5. AP to CAM IF (LAN2)
6. LED OF to LED IF
7. CAM to CAM IF
8. AP to CAM IF (LAN1)
9. AC_IN to SPD

KMW INC.
183-6, Yeongcheon-ro, Dongtan-myeon, Hwaseong-si, Gyeonggi-do, South Korea
Tel : +82-31-370-8866 / E-Mail : ledsales@gigateraled.com / Homepage : www.gigateraled.com

Installation Guide
SPES2

IT Converged LED Lighting

Installation Instruction

1

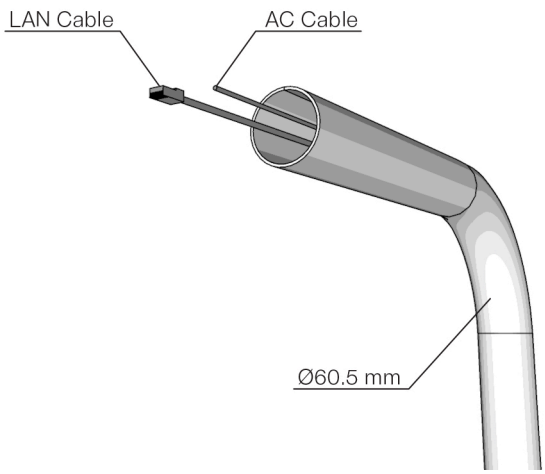

Shut off the main power before installing the product.
Make sure that the dimension of the light pole is correct.
(diameter should be Ø60.5 mm or less)
Insert the AC power line and the LAN cable into the light pole.

*Do not connect the WAN cable when installing the slave SPES.

2

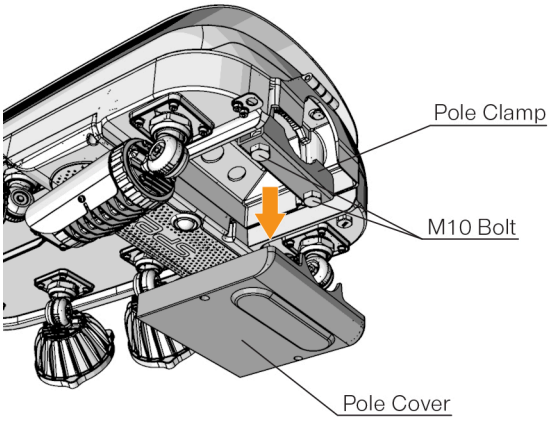

Remove the pole cover using a 2.5mm hex wrench.
Separate the pole clamp by releasing the M10 hexagonal headed bolts.

3

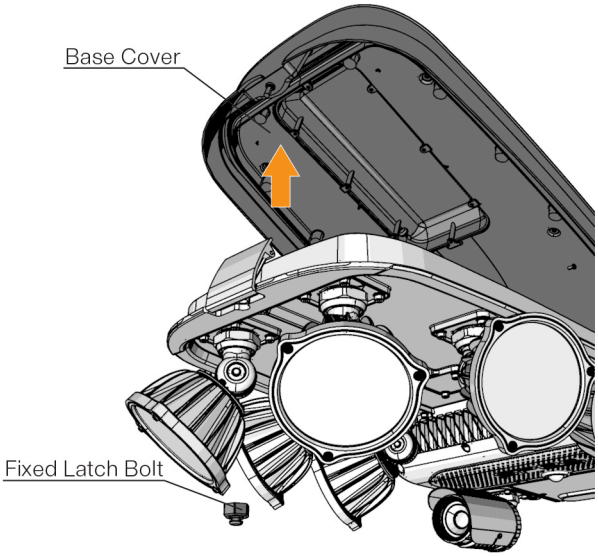

Release the latch-fixing bolts and open the base cover.

4

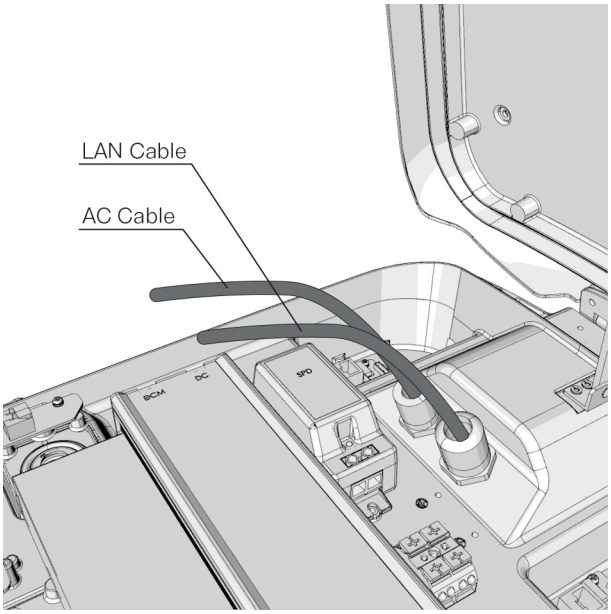

Remove the caps of the AC power line and the LAN cable glands.
Insert the AC power line and the LAN cable from the bottom.

*Do not connect the WAN cable when installing the slave SPES.

GigaTera®
beyond the light

KMW INC.
183-6, Yeongcheon-ro, Dongtan-myeon, Hwaseong-si, Gyeonggi-do, South Korea
Tel : +82-31-370-8866 / E-Mail : ledsales@gigateraled.com / Homepage : www.gigateraled.com

Installation Guide
SPES2

IT Converged LED Lighting

Installation Instruction

5

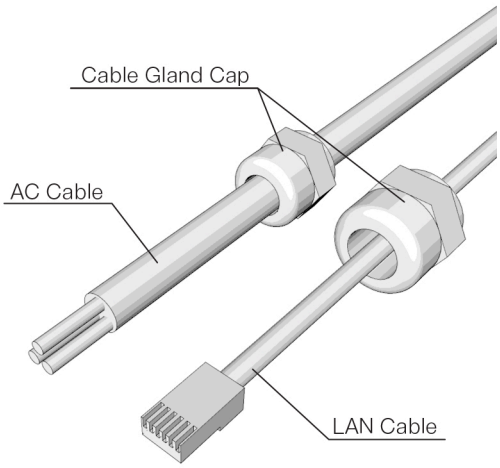

Install the caps of the AC power line and LAN cable glands.

*Do not connect the WAN cable when installing the slave SPES.

6

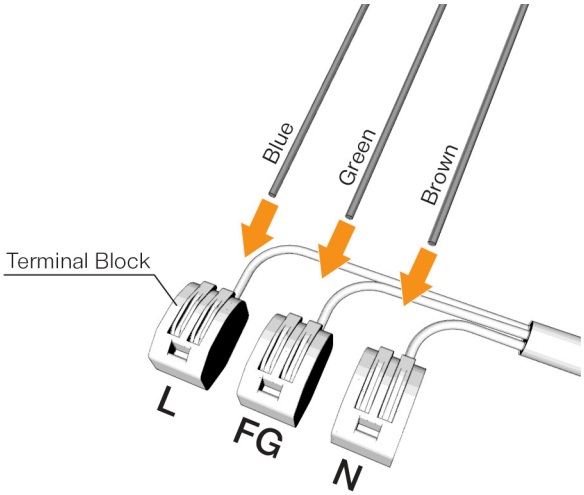

Refer to the wiring diagram A and B to wire the AC power line
And the LAN cables.

*Do not connect the WAN cable when installing the slave SPES.

7

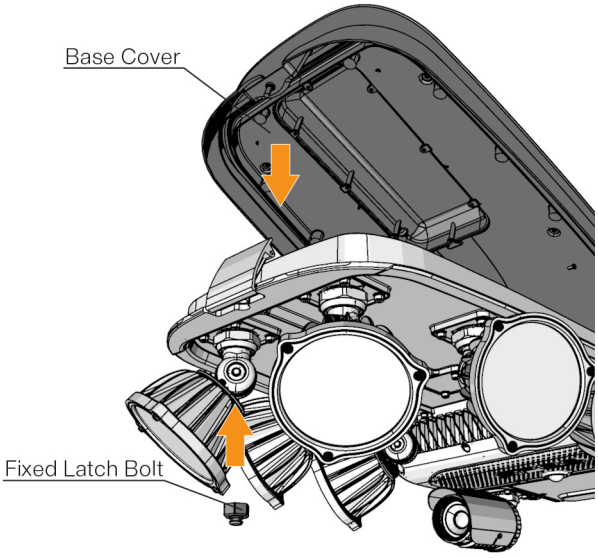

After wiring, close the base cover and fix it using the latch and latch-fixing bolts.

When closing the cover,
make sure that no wire is crushed at the joint.

8

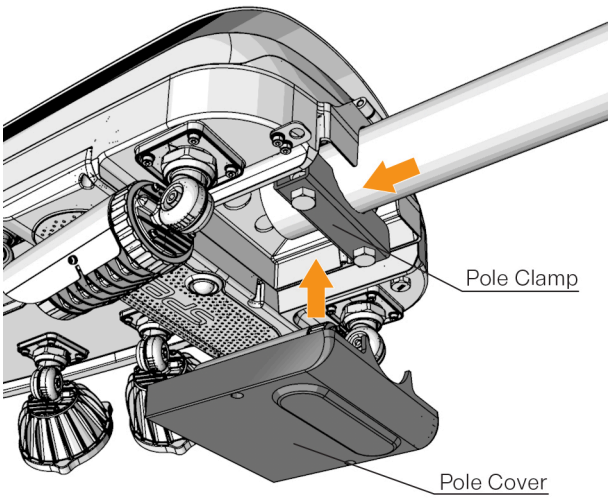

After connecting the SPES2 with the light pole,
fix the pole clamp and close the pole cover.

KMW INC.
183-6, Yeongcheon-ro, Dongtan-myeon, Hwaseong-si, Gyeonggi-do, South Korea
Tel : +82-31-370-8866 / E-Mail : ledsales@gigateraled.com / Homepage : www.gigateraled.com

Installation Instruction

9

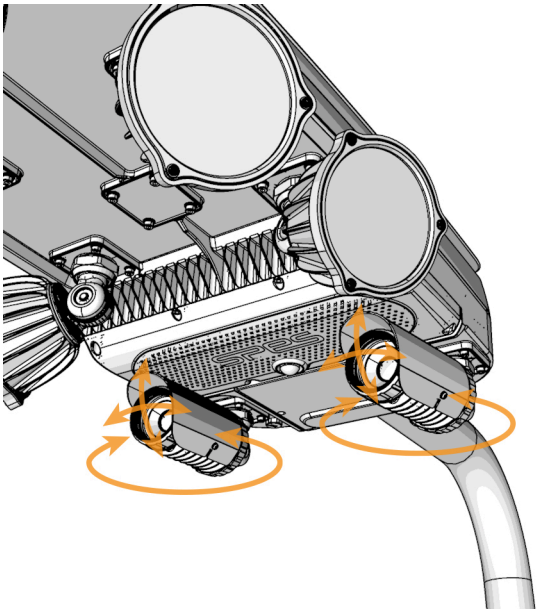

When the installation is complete,
adjust the LED and camera modules to the desired positions.

Camera module turning radius : 350°
Used : 36mm Spanner, 5.0mm Hex wrench

10

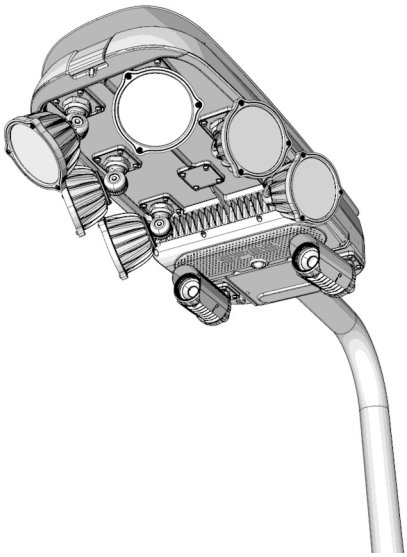

Connect the product to the main power supply and
check whether it operates correctly.
(Refer to the S/W manual to check camera operation procedures.)

Contact the manufacturer or the seller for inquiry when there is a problem with the product.

GigaTera® beyond the light by KMW
Copyright © 2014 KMW INC. All rights reserved. / www.kmw.co.kr
The information in this document is subject to change without notice. / Document Revision V 0.71 2014.12.12