Service Manual

Radiotelephones MR 11

Edition 2

Product survey 1

Technical description, external connections 2

Circuit diagrams 3

Spare parts 4

Assembly and conversion instructions 5

Service accessories 6

Programming with WinIPP 7

© All rights reserved by Motorola GmbH • Geschäftsbereich Funksysteme, also for patent and trade mark applications. Rights of disposal, e.g. copyright and right of transfer to third parties, are likewise held by us.

Technical Description MR 11 and Description of the External Connections

Table of Contents

1	General Information	2 - 2
2	Technical Data	2 - 2
3	Circuit Description	2 - 3
3.1	Receiver	2 - 3
3.2	Transmitter	2 - 4
3.3	Antenna Filter with Antenna Switch	2 - 4
3.4	Frequency Conditioning	2 - 5
3.5	Analog Signal Processing	2 - 6
3.6	Unit Control	2 - 6
3.7	Signalling Module MDSR 134	2 - 7
4	Function of the External Connections	2 - 8
4.1	4-pin Rear Connection	2 - 8
4.2	10-pin FCC Plug	2 - 9
4.3	25-pin Socket (Data Interface MR 11..R)	2 - 9

1 General Information

The MR 11 radio family has been designed on a common technical basis. This means: largely the same components, the same circuit technology, the same software and the same user interface. The radios are designed both for private mobile radio and trunking systems.

The MR 11 is the mobile radio in this new radio family. There are two models: the C radios with an integrated control unit for voice transmission and the R radios (without control unit) with connection facility for external data equipment and control units for voice transmission.

2 Technical Data

	MR 11.. S-C **MR 11.. T-C**	**MR 11.. SD-R** **MR 11.. TD-R**
Brief description	With integrated keyboard and LCD	With 25-pin data connection
External connection	10-pin FCC socket, loudspeaker and follower contact	10-pin FCC socket, loudspeaker, follower contact and 25-pin Sub-D socket
Frequency range		
MR 1116	146 - 174 MHz	146 - 174 MHz
MR 1142		
Receiver	400 - 440 MHz	400 - 440 MHz
Transmitter		
Part A (1 - 6 W)	400 - 420 MHz	400 - 420 MHz
Part B (1 - 6 W)	420 - 440 MHz	420 - 440 MHz
Part C (10 - 25 W)	400 - 425 MHz	400 - 425 MHz
Part D (10 - 25 W)	425 - 440 MHz	425 - 440 MHz
MR 1145	440 - 470 MHz	440 - 470 MHz
Channel spacing	20 / 25 kHz, 12.5 kHz	20 / 25 kHz, 12.5 kHz
Number of channels	999 Transmitter and receiver freely programmable	999 Transmitter and receiver freely programmable
AF output power	4 W on 4 Ω	4 W on 4 Ω
Signalling	Analog / digital	Analog / digital
Antenna connection	BNC	BNC
Dimensions (W x H x D)	178 x 35 x 165 mm	178 x 35 x 165 mm
Weight	1,100 g	1,100 g
Protection class	IP 50	IP 50

	MR 1116	MR 1142 MR 1145
Transmitter power	0.1 W fixed 1 - 6 W 6 - 12 W 12 - 25 W Channel-dependently programmable	0.1 W fixed 1 - 6 W 1 - 10 W 10 - 25 W Channel-dependently programmable
Current consumption		
Standby	< 0.3 A	< 0.3 A
Receive	< 0.5 A	< 0.5 A
Transmit		
6 W	< 2.3 A	< 3 A
10 W	—-	< 3.5 A
12 W	< 3.5 A	—-
25 W	< 6.8 A	< 7 A

3 Circuit Description

The circuit description and its component references refers directly to individual components in part which can only be found in the design circuit diagrams.

3.1 Receiver

The complete receiver module consists of the VHF/UHF pre-stage (RX), a ring mixer, the IF unit (IF) and a power supply (PS).

Pre-stage (RX)

The pre-stage is responsible for far-off selectivity, attenuation of the image frequency and the total sensitivity. The circuit consists of two band pass filters and one amplifier in emitter circuit. The pass range is divided into four reception ranges by two varicaps in the first band filter. The analog signal VRXTUNE controls the respective reception range.

The second band pass filter could be omitted from the MR radio on account of the good selection of the harmonic filter.

Double Balanced Mixer

In the double balanced mixer, the reception signal is mixed down to the 1st IF level by the applied oscillator signal.

IF Module

The IF module amplifies the 45 MHz signal from the mixer and provides the necessary channel selection by the available crystal and ceramic filters. It supplies a demodulated AF signal to the following AF-IC and provides the computer with an RSSI (received signal strength indicator) signal.

Power Supply (PS)

The power supply generates the necessary receiver voltage VRX. VRX is derived from the switched battery voltage BATSWD and stabilised at 8 V. VRX is switched on and off by the control line VTXCTRL.

3.2 Transmitter

Four adjustment values for four power stages are stored in the radio for the transmitter output stages in production. One of these values can be assigned to the “High Power” stage switchable by the user, another to the “Low Power” stage with the help of WinIPP in the after-sales service. This can be done uniformly for all channels or separately for each channel. To ensure as constant as possible an output power over the whole frequency range, four times four setting values for 146 MHz, 155 MHz, 165 MHz and 174 MHz are determined in automatic adjustment.

The switching times for reception-transmission, transmission-reception mode are less than 30 milliseconds. The power supplies for the transmitter are switched on and the T/R switch switched to transmission mode via the control line VTXCTRL.

Transmitter Ouput Amplifier

The transmitter is available in three power ranges (1-6 W / 6-12 W / 12-25 W). The stored adjustment values for the transmitter power in the MR radios are:

1-6 W:	1 W	2 W	6 W	6 W
6-12 W:	6 W	6 W	12 W	12 W
12-25 W:	12 W	12 W	25 W	25 W

The transmitter power of the MR 11 is keyed up with the aid of a D/A converter in the form of a staircase function in two milliseconds. The setting values are passed to the transmitter via the control line VPWRREF after a linear interpolation.

3.3 Antenna Filter with Antenna Switch

The antenna filter connects either the receiver pre-stage or the transmitter output to the antenna socket. Its transmission function has band pass character. Switching is effected by PIN diodes.

The MR 11 harmonic filter is a low pass.

3.4 Frequency Conditioning

The “Frequency conditioning” module consists of the following circuit parts:

- Transmitter VCO frequency modulatable via the connection “AFMOD”, followed by a non-selective buffer amplifier for decoupling with an output power at “TXLO” of approx. 10 dBm.
- Receiver VCO frequency followed by a selective amplifier with an output power for the double balanced mixer at “RXLO” of approx. 10 dBm.
- Voltage stabilisation (N151) with additional filtering for the VCOs.
- Phase locked loop (PLL), consisting of a switchable frequency divider (D361), followed by a frequency synthesizer (D362) with digital phase comparator (PD), current source output, built-in voltage inverter for doubling the VCO tuning voltage and controlled by a serial three-wire bus, a passive, double switchable loop filter, an external PD current adjuster and a reference oscillator (TCXO, G361).

Function description:

The frequency conditioning takes place according to the principle of frequency analysis in the one loop (dual modulus) divider method.

The frequency of the free-oscillating transmitter or receiver VCOs (switching through V352, controlled by port MFO1 of D362 by status word) is divided down to a comparative frequency of 5 or 6.25 kHz with switchable dividers and compared with an identical high constant comparative frequency derived from the TCXO frequency of 12.8 MHz in a phase discriminator. This supplies a control voltage dependent on the frequency and phase deviation which makes sure that the respective VCO oscillates at the frequency which satisfies the PLL conditions.

To reduce the transient time after frequency change, the loop frequency of the PLL is increased considerably for a few milliseconds with the positive edge of CSPLL immediately after receiving the new divider data by external adjustment of the PD current through connection MFO2 of the frequency synthesizer D362 (effected by V361 and corresponding RC wiring, triggered by line SCLPLL) and then reduced continuously to such a low value that modulation in the subaudio range is possible without taking compensatory action. In the meantime, the loop attenuation is adapted by the resistors R381, 382, 384 in conjunction with the switches V364, 365 in two steps (same triggering but time constants now by C367, R377, R385).

3.5 Analog Signal Processing

NF 134

The AF module NF 134 contains all the electronic level adjusters required for adjustment as well as all the AF filters for the transmission and reception paths of the various channel spacings.

Microphone Amplifier ML 11, HA 11, HBT 11

A new kind of AGC amplifier is used which enables good communication even in noisy environments (DNC, Dynamic Noise Compensation). The external inputs (MIC100) of the radios are unstabilised and only obtain their DNC function from a connected Motorola hand control unit.

AF Output Amplifier

The AF output amplifier for the external loudspeaker and the hand control unit is a monolithic IC TDA 1020 (N403). Four Watts on 4 ohms are generated.

3.6 Unit control

The unit control consists of a computer system with internal and external memories. The ASIC MDSR 134 can be considered the central element. It is used for clock generation for other components, provides the Chip-Select signals of the memories, has a port extension and analog and digital encoders/decoders.

Microcontroller

A 16-bit controller from Mitsubishi is used here. Its designation is: M37710. It is operated with approx. 15 MHz. This computer contains a 32 kB internal ROM.

The so-called “MELP-SW” (Micro Electronic Processor Software) needed for radio tuning, loading the actual radio software and communication with the coding program “WinIPP” is located in the inernal computer memory.

Memory

A 32 k RAM and two slots for flash EEPROMs are provided as external memory components. Two times 256 kB or two times 512 kB can be plugged in here. An EEPROM of 2 kB serves as a parameter memory. General access to all memories is through the MELP-SW.

Software

The entire radio software is divided into two parts. The unchangeable MELP-SW and the radio-specific FLASH-SW. This MELP-SW controls general access, contains extensive test sequences, the necessary hardware drivers and supports the production-relevant test routines. The system is always started under MELP-SW.

3.7 Signalling Module MDSR 134

The MD 134 contains the function groups:

1. Analog signalling
2. Digital signalling (FFSK 1200 Baud)
3. Clock conditioning
4. Chip-Select logic for the unit control.

The MDSR 134 has been derived from a fusion of the components SR 130 and MD 134.

Analog Signalling (Function Scope of the SR 130)

The SR 130 is a universal encoder/decoder for analog tone signalling methods according to ZVEI, CTCSS, CCIR, EIA standards. The SR 130 can be programmed for frequencies of 1 Hz to 4000 Hz.

Two separate tone signal generators allow use as a DTMF encoder.

Digital Signalling (Function Scope of the MD 134)

The MD 134 is an intelligent semiduplex modem. It processes a 1200-b/s FFSK signal. The two frequencies are 1200 Hz for a logic 1 and 1800 Hz for a logic 0. The frame synchronisation is achieved by comparison with a synchronisation word, in addition the inverse synchronisation word is searched for. The synchronisation word is 32-bit freely programmable.

The module is controlled by the processor through a parallel interface.

Digital Signalling (Function Scope of the OKI modem)

A bit-transparent modem is used for RX decoding of the 1200 baud signalling.

A software control effects an automatic changeover from MDSR 134 to the OKI modem.

Circuit diagrams, signal diagrams

Contents

1 MR 1116 .. C .., MR 1116 .. R .. 3 - 2
Basic unit

2 MR 1142 .. C .., MR 1142 .. R .., MR 1145 .. C .., MR 1145 .. R .. 3 - 11
Basic unit

3 MR 11 .. C .. 3 - 20
Control unit

4 ML 11 3 - 22
Microphone-Loudspeaker

5 HBT 11 3 - 23
Hand control unit

6 HA 11 3 - 25
Handset

Attention!

Please note!

The circuit diagrams and component mounting diagrams on the following pages are

only for your information.

Work on the printed board is **not planned** in the service concept.

Violations will render guarantee claims invalid. Spare parts cannot be delivered for unauthorized work on the printed board.

However, work can be approved within a restricted scope in founded, exceptional cases (e.g. installation of a tip-over switch). In these cases, you will be informed by means of (service information) circulars.

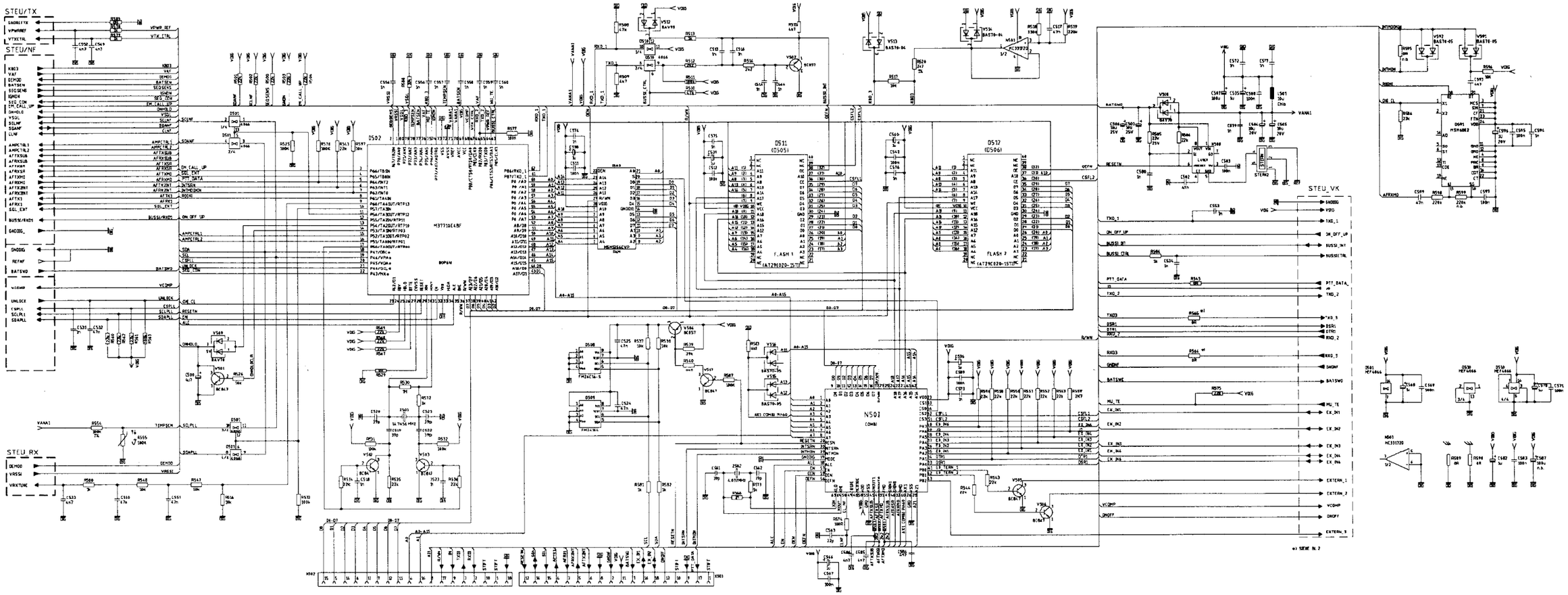

MR 1116 .. C ..
MR 1116 .. R ..
Basic unit

Refer to note on page 3 - 1

Index 9

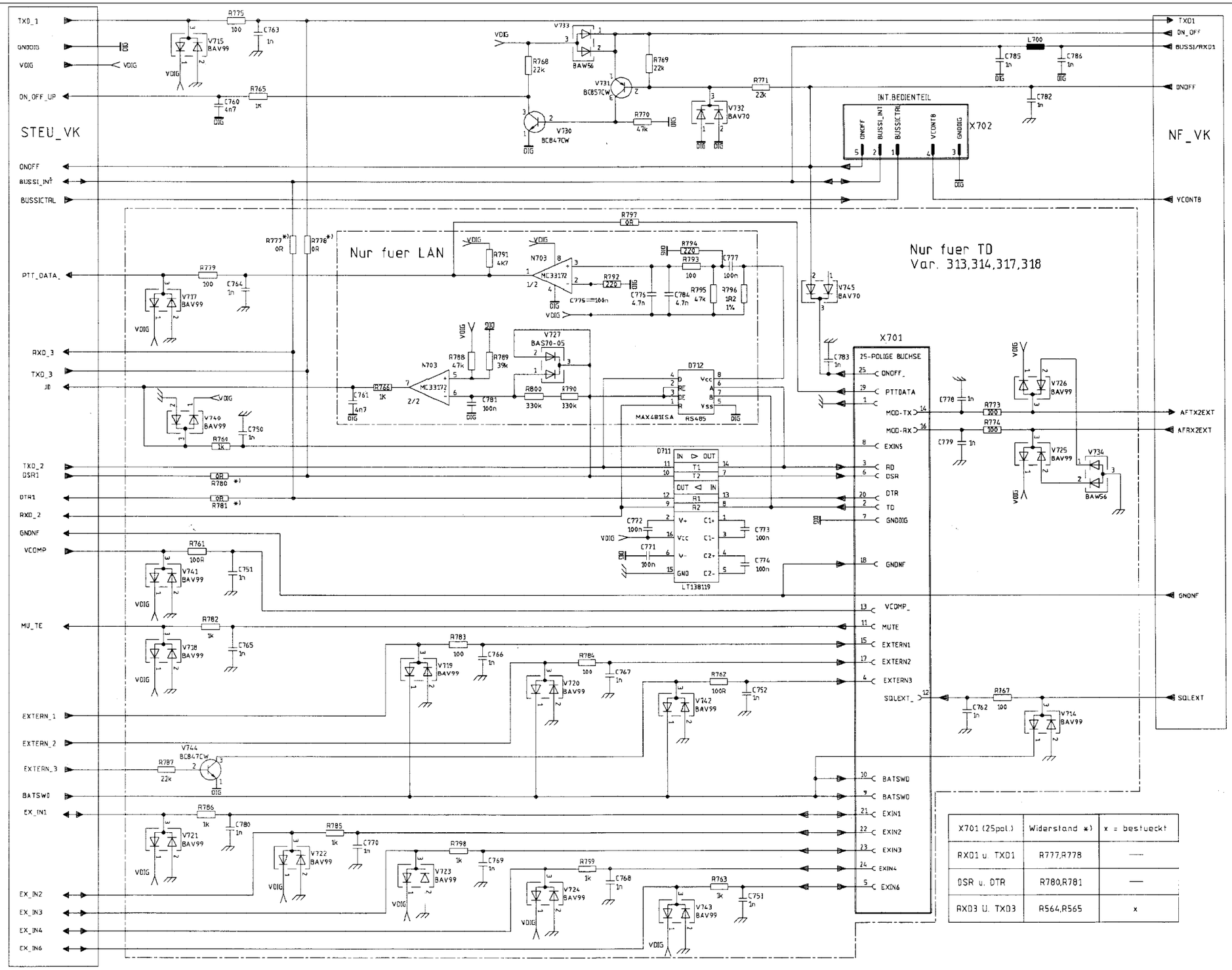

X701 (25pol.)	Widerstand *)	x = bestueckt
RXD1 u. TXD1	R777,R778	—
DSR u. DTR	R780,R781	—
RXD3 U. TXD3	R564,R565	x

MR 1116 .. C ..
MR 1116 .. R ..
Basic unit

Refer to note on page 3 - 1

Index 9

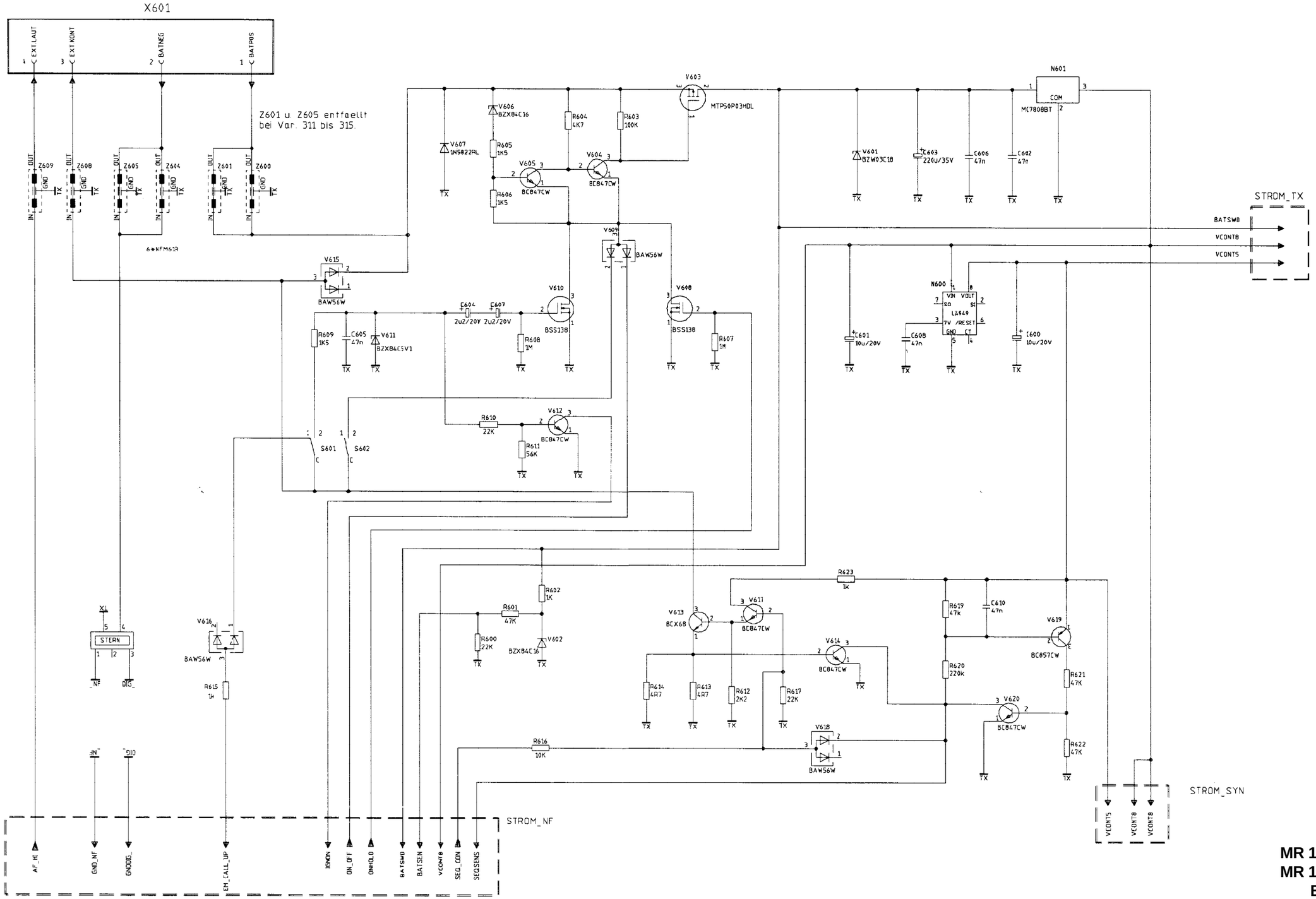

MR 1116 .. C ..
MR 1116 .. R ..
Basic unit

Refer to note on page 3 - 1

Index 9

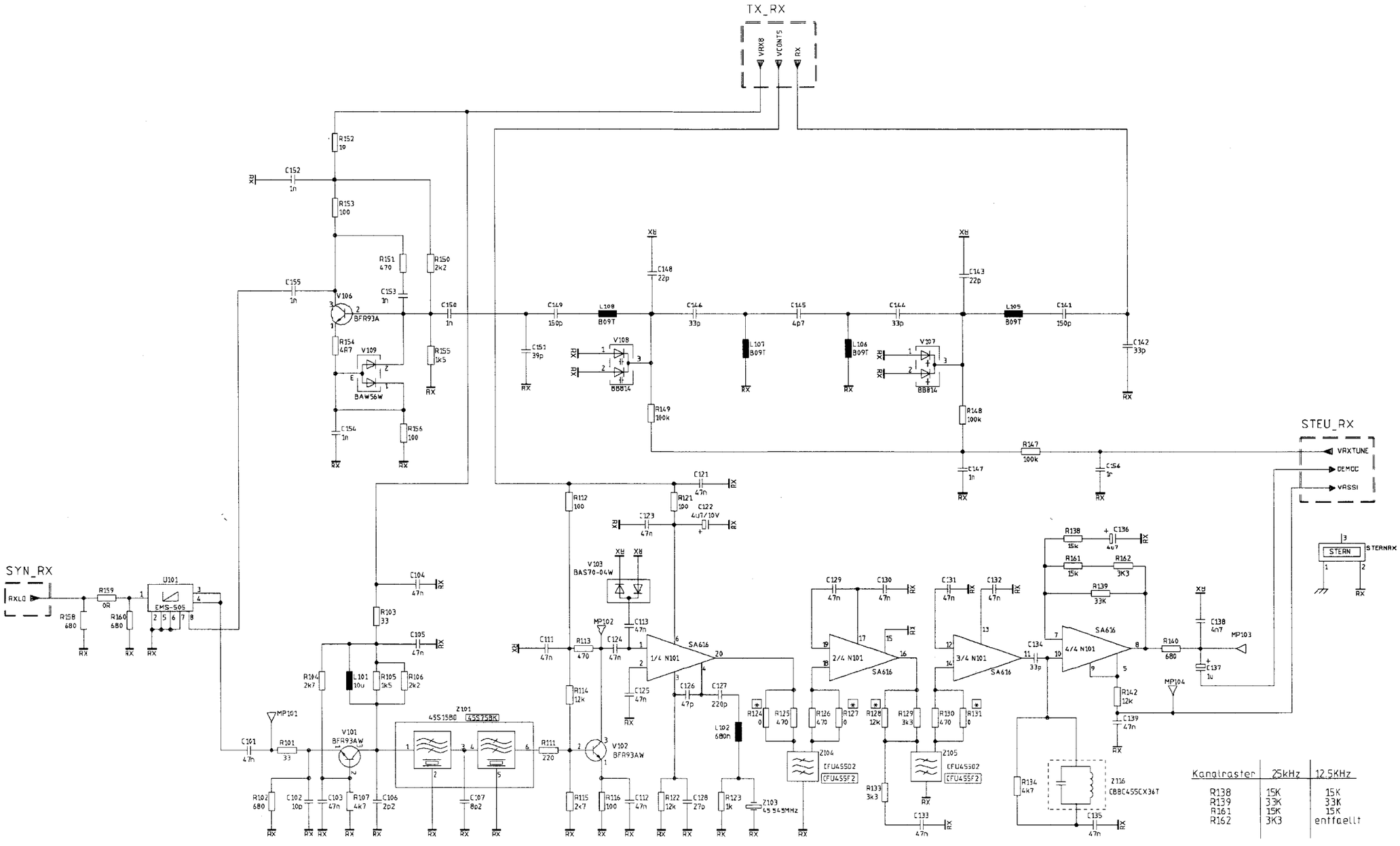

BEMERKUNG: ▭ bei 12,5 kHz-Raster bestueckt

⊠ bei 12.5 kHz-Raster nicht bestueckt

MR 1116 .. C ..
MR 1116 .. R ..
Basic unit

Refer to note on page 3 - 1

Index 9

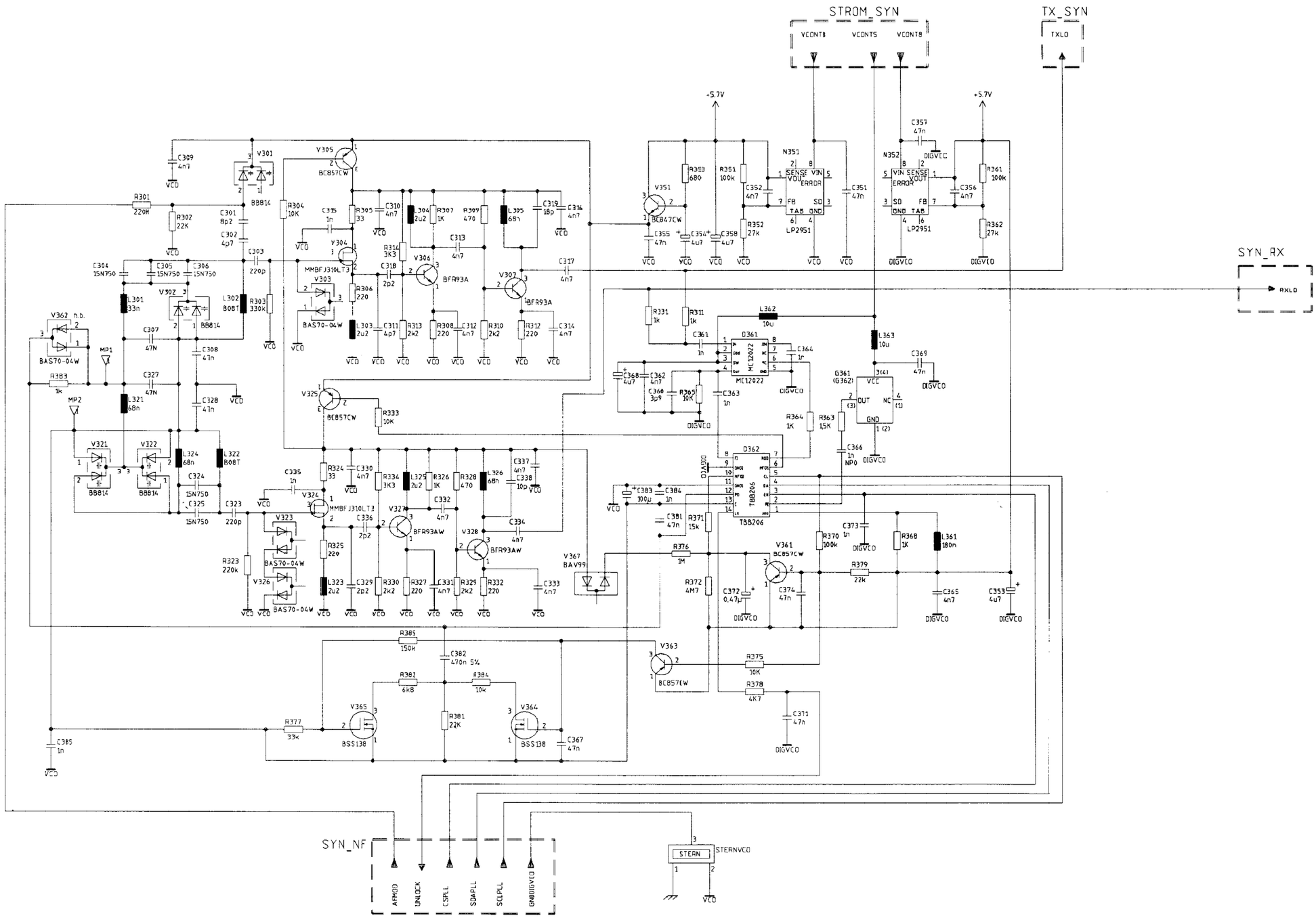

MR 1116 .. C ..
MR 1116 .. R ..
Basic unit

Refer to note on page 3 - 1

Index 9

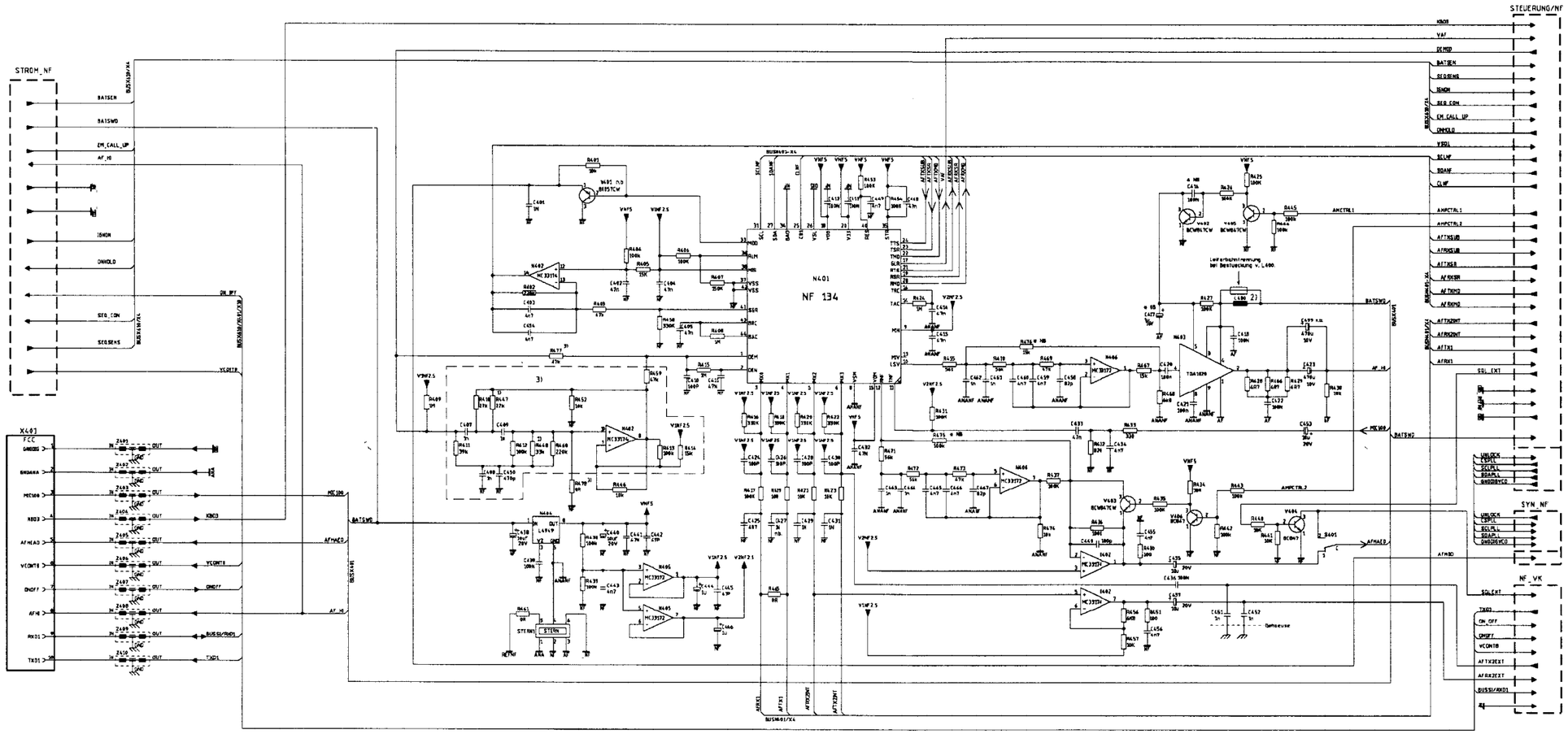

1) R447,R448 entfaellt bei 12,5 kHz Raster, VAR. 312,314,316,318

2) L400: Optional bei Steerung durch Lichtmaschine.

3) Bei umschaltbarem Kanalraster sind die Bauteile in dem eingerahmten Bereich nicht bestueckt, dafuer sind R477 u. R478 bestueckt.

MR 1116 .. C ..
MR 1116 .. R ..
Basic unit

Refer to note on page 3 - 1

Index 9

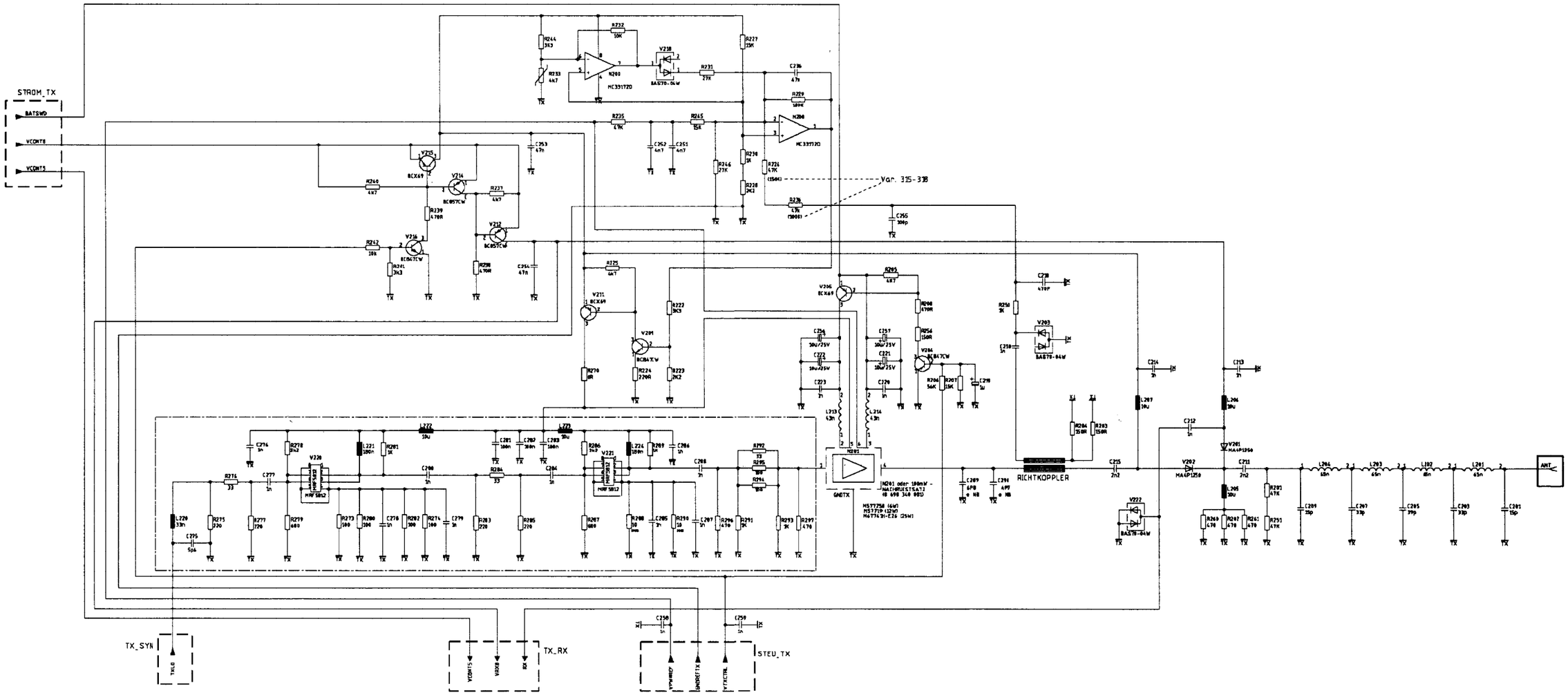

MR 1116 .. C ..
MR 1116 .. R ..
Basic unit

Refer to note on page 3 - 1

Index 9

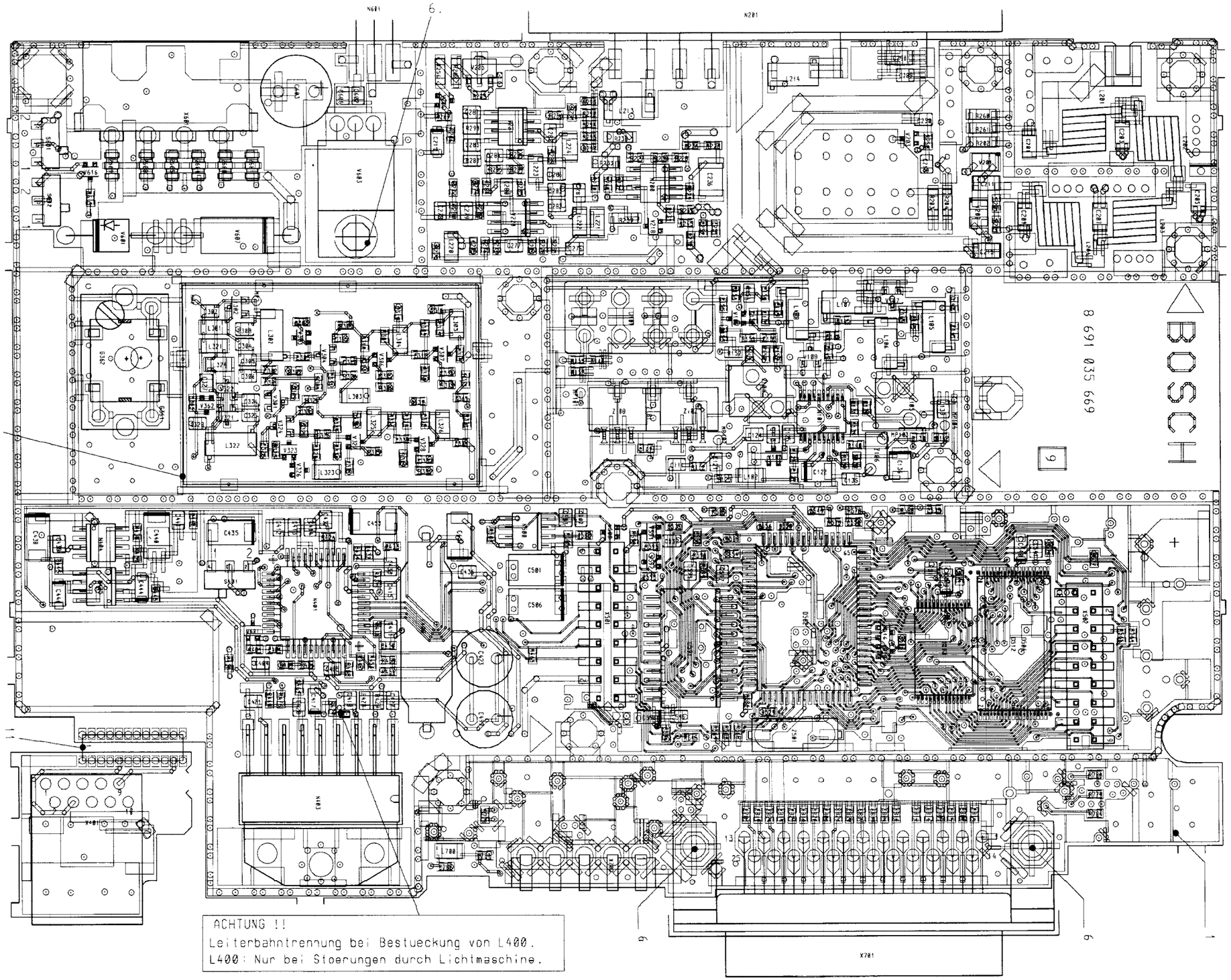

MR 1116 .. C ..
MR 1116 .. R ..
Basic unit

Refer to note on page 3 - 1

Index 9

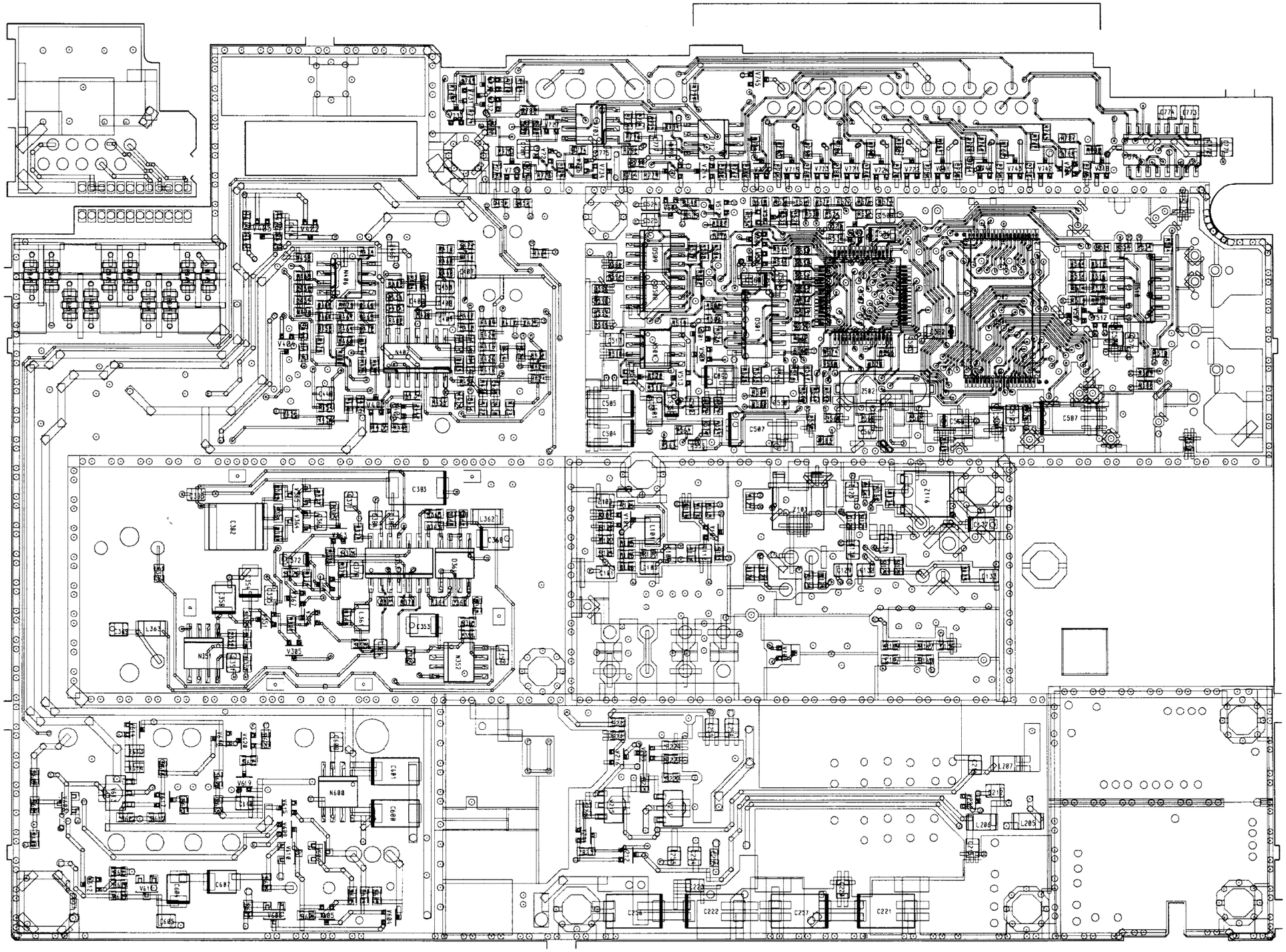

MR 1116 .. C ..
MR 1116 .. R ..
Basic unit

Refer to note on page 3 - 1

Index 9

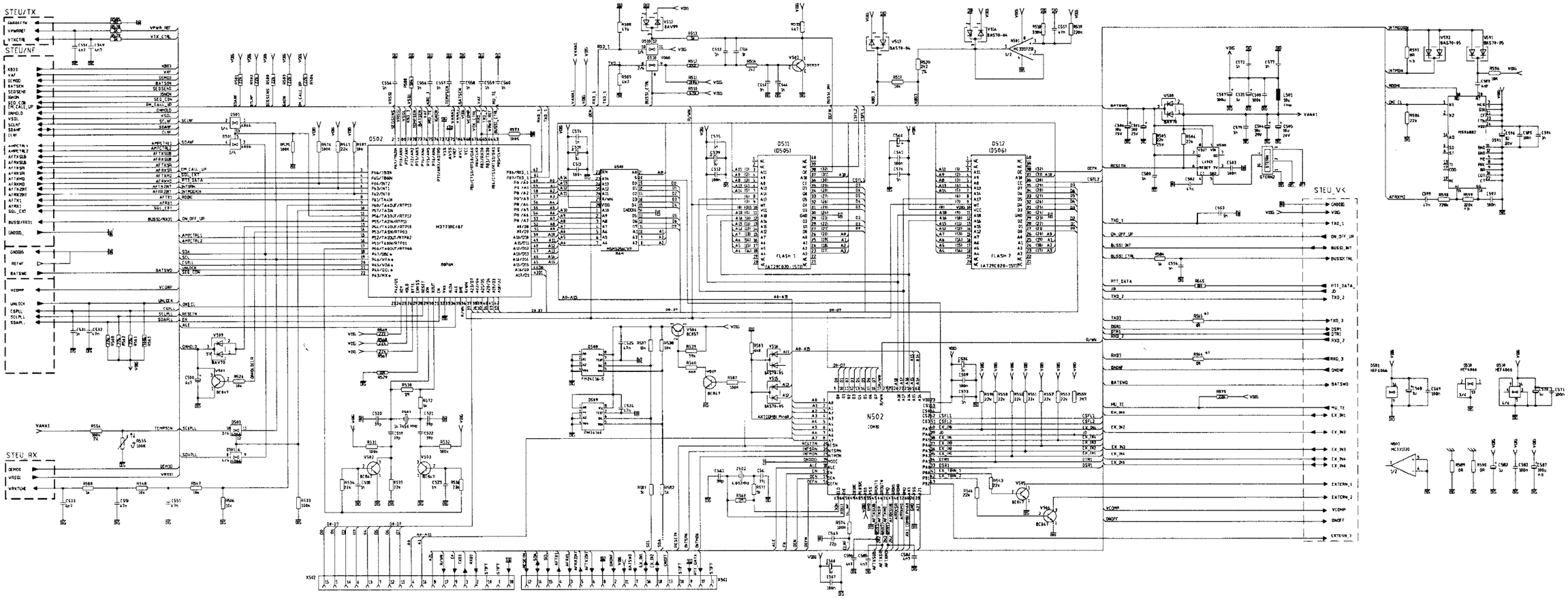

MR 1142 .. C ..
MR 1142 .. R ..
MR 1145 .. C ..
MR 1145 .. R ..
Basic unit

Refer to note on page 3 - 1

Index 5

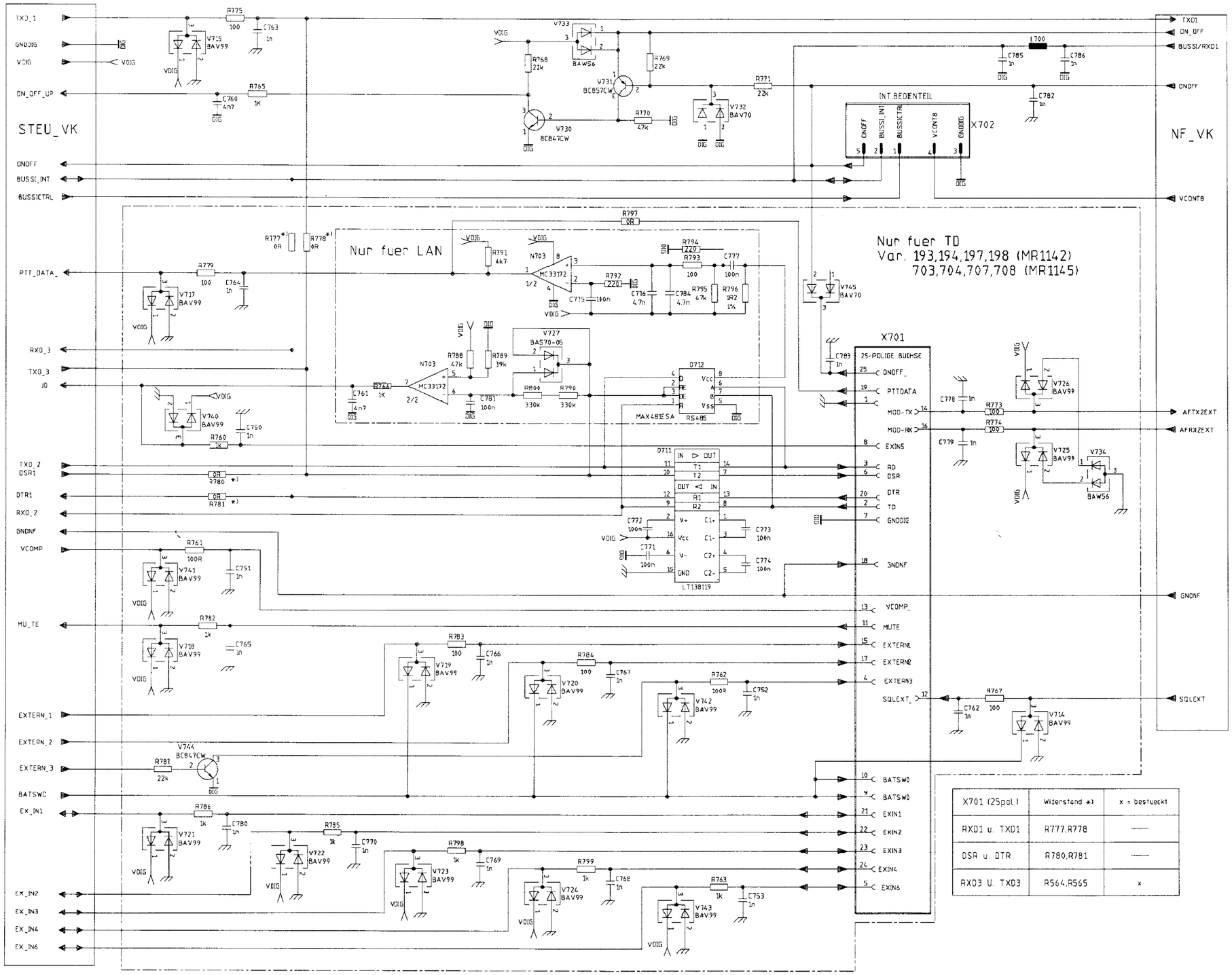

X701 (25pol.)	Widerstand *)	x = bestueckt
RXD1 u. TXD1	R777,R778	—
DSR u. DTR	R780,R781	—
RXD3 U. TXD3	R564,R565	x

MR 1142 .. C ..
MR 1142 .. R ..
MR 1145 .. C ..
MR 1145 .. R ..
Basic unit

Refer to note on page 3 - 1

Index 5

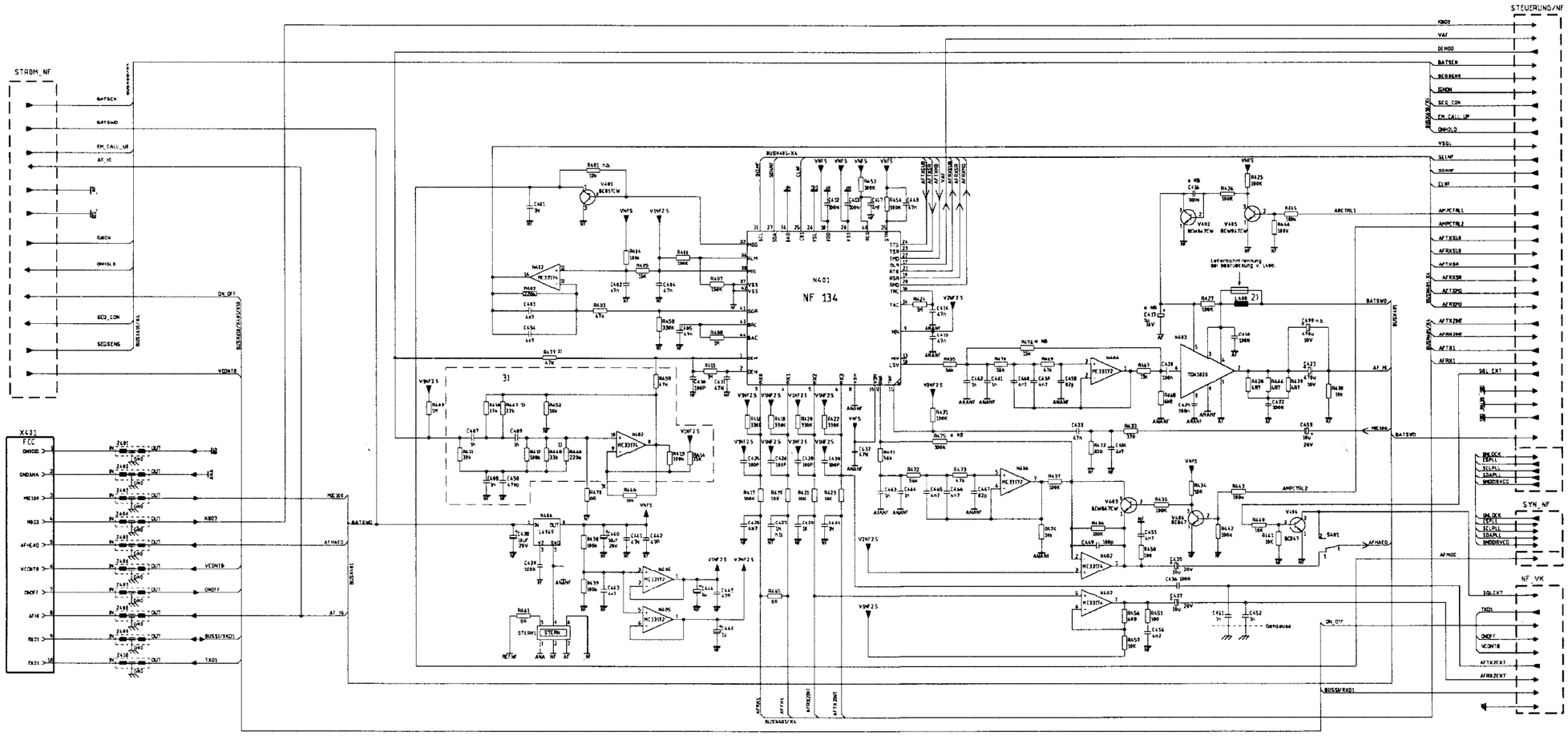

1) R447,R448 entfaellt bei 12,5 kHz Raster.
8 697 340 192,194,196,198 (MR1142)
8 697 340 702,704,706,708 (MR1145)

2) L400: Optional bei Steuerung durch Lichtmaschine

3) Bei umschaltbarem Kanalraster sind die Bauteile in dem eingerahmten Bereich nicht bestueckt, dafuer sind R477 u. R478 bestueckt.

MR 1142 .. C ..
MR 1142 .. R ..
MR 1145 .. C ..
MR 1145 .. R ..
Basic unit

Refer to note on page 3 - 1

Index 5

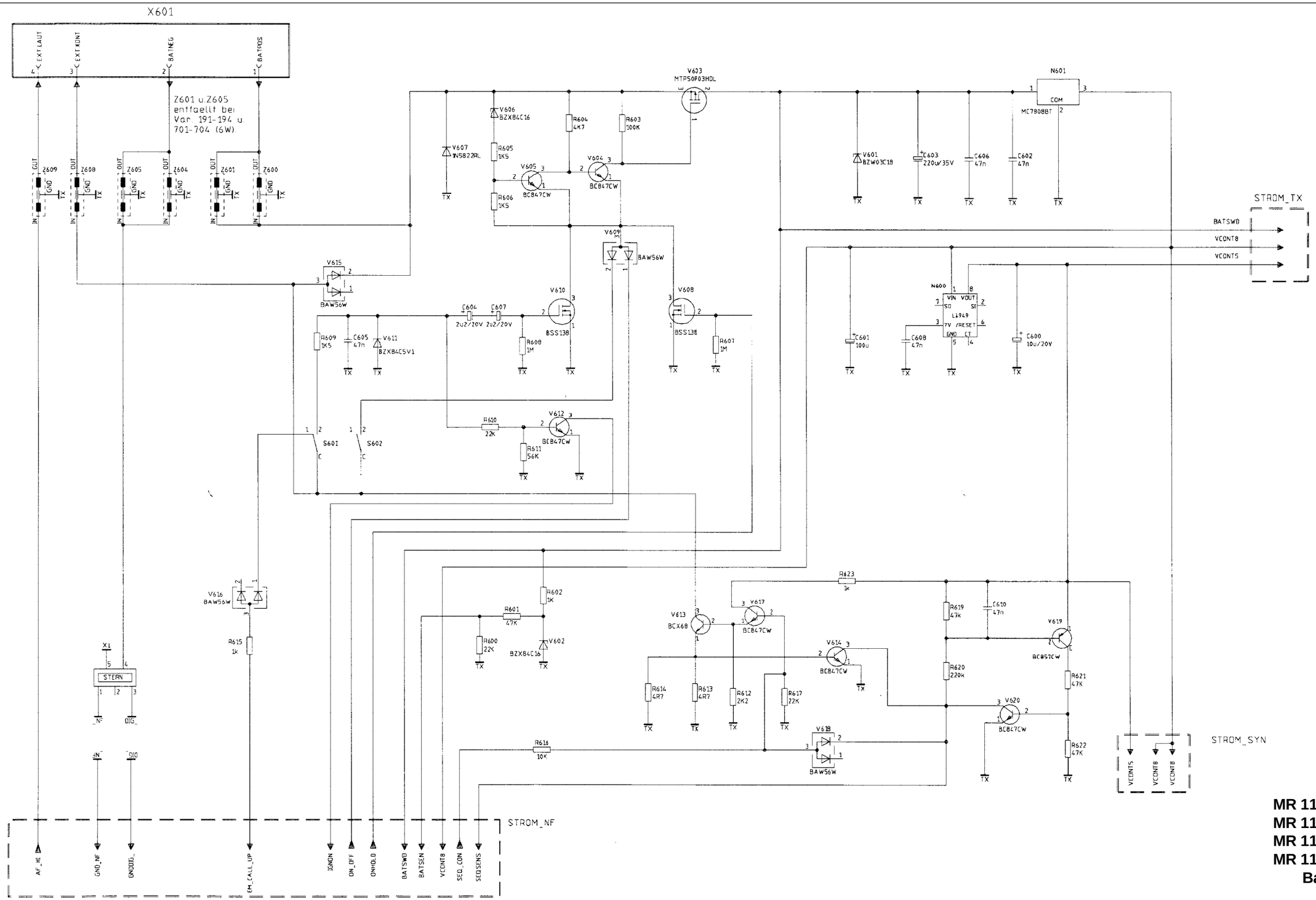

MR 1142 .. C ..
MR 1142 .. R ..
MR 1145 .. C ..
MR 1145 .. R ..
Basic unit

Refer to note on page 3 - 1

Index 5

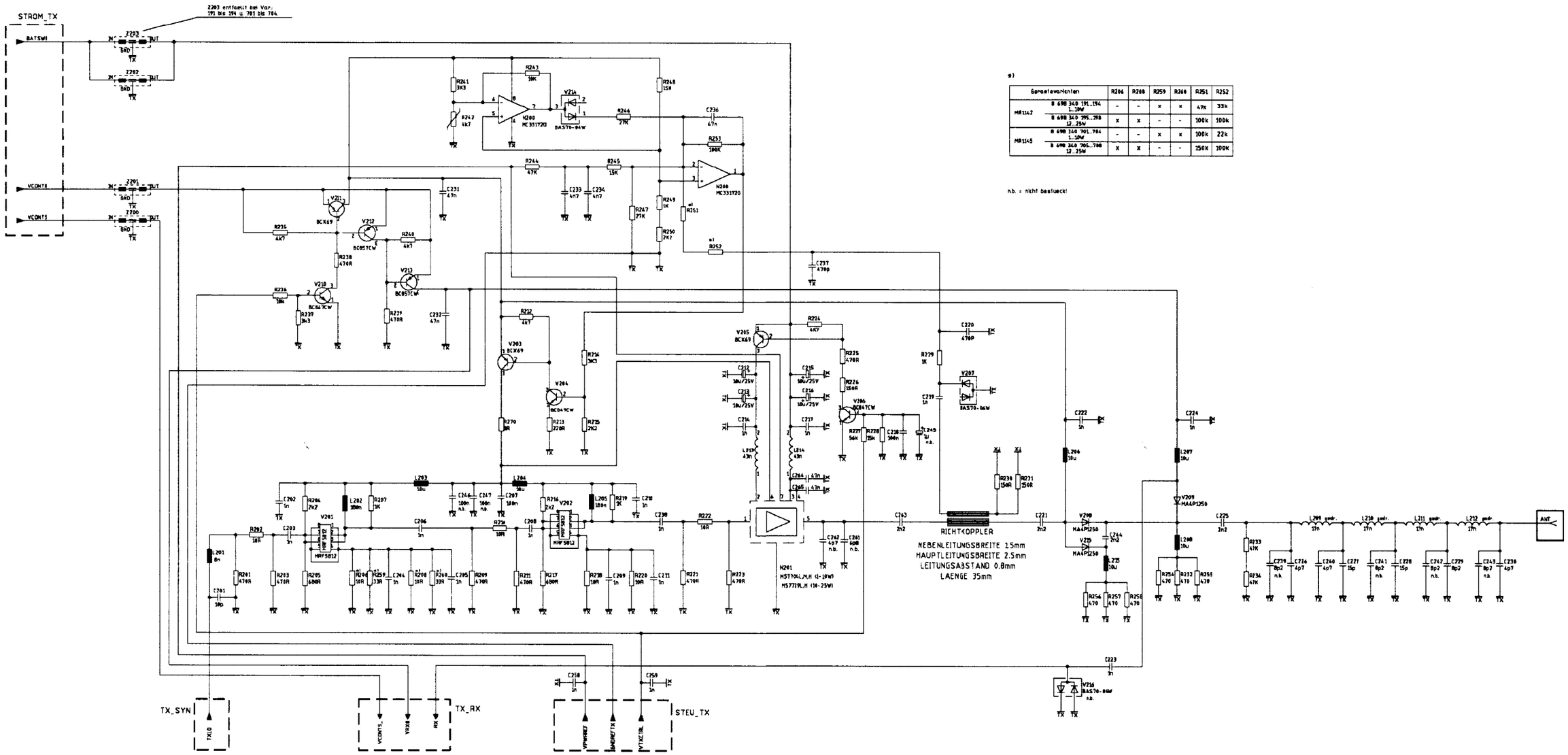

*)

Geraetevarianten		R206	R208	R259	R260	R251	R252
MR1142	B 698 340 191..194 1..10W	-	-	x	x	47K	33k
	B 698 340 795..798 12..25W	x	x	-	-	100k	100k
MR1145	B 698 340 701..704 1..10W	-	-	x	x	100k	22k
	B 698 340 705..708 12..25W	x	x	-	-	250k	100K

n.b. = nicht bestueckt

MR 1142 .. C ..
MR 1142 .. R ..
MR 1145 .. C ..
MR 1145 .. R ..
Basic unit

Refer to note on page 3 - 1

Index 5