Nemko EESI, Inc.
11696 Sorrento Valley Road, Suite F
San Diego, CA 92121-1024
Phone (858)793-9911 Fax (858)793-9914

# FCC, PART 15, SUBPART C

# CERTIFICATION APPLICATION

For The MiniMed Implant Unit (Transceiver)

Model: **MMT-2007**

FCC ID: OSU2007 (PENDING)

PREPARED FOR:

**Medical Research Group**
12744 San Fernando Road
Sylmar, CA 91342

PREPARED ON **NOVEMBER 1, 1999**

DOCUMENT NUMBER 99-208

***This report has been prepared in accordance with all applicable requirements of ANSI C63.4-1992***

# DOCUMENT HISTORY

| REVISION | DATE | COMMENTS |
|---|---|---|
| - | 11/01/99 | Initial Release J. L. Griffin |

NOTE: Nemko EESI, Inc. hereby makes the following statements so as to conform to Chapter 10 (Test Reports) Requirements of ANSI C63.4 (1992) "Methods and Measurement of Radio-Noise Emissions from Low-Voltage Electrical and Electronic Equipment in the Range of 9 kHz to 40 GHz":

- The unit described in this report was received at Nemko EESI, Inc.'s facilities on September 22, 1999. Testing was performed on the units described in this report September 22 - October 1, 1999.
- The Test Results reported herein apply only to the Units actually tested, and to substantially identical Units.
- This test report must not be used by the client to claim product endorsement by NVLAP or any agency of the U.S. Government.

This document is the property of Nemko EESI, Inc., and shall not be reproduced, except in full, without prior written approval of Nemko EESI, Inc.. However, all ownership rights are hereby returned unconditionally to Medical Research Group, and approval is hereby granted to Medical Research Group and its employees and agents to reproduce all or part of this report for any legitimate business purpose without further reference to Nemko EESI, Inc..

# TABLE OF CONTENTS

**DOCUMENT HISTORY** ..... **ii**

**CERTIFICATION** ..... **iv**

**1. ADMINISTRATIVE DATA AND TEST SUMMARY** ..... **1**
1.1 Administrative Data ..... 1

**2. SYSTEM DESCRIPTION AND CONFIGURATION** ..... **2**
2.1 Description of EUT System ..... 2
2.2 System Components and Power Cables ..... 5
2.3 System Components and Power Cables ..... 5

**3. DESIGN MODIFICATIONS FOR COMPLIANCE** ..... **6**

**4. DESCRIPTION OF TEST SITE AND EQUIPMENT** ..... **6**
4.1 Description of Open Area Test Site ..... 6
4.2 Test Equipment ..... 6

**5. DESCRIPTION OF TESTING METHODS** ..... **7**
5.1 Introduction ..... 7
5.2 Configuration and Methods of Measurements for Radiated Emissions ..... 9
5.3 Radiated Emission Field Strength ..... 12

**6. TEST RESULTS** ..... **13**
6.1 Radiated Emissions Test Data ..... 13
6.2 Spurious Radiated Emissions Test Data ..... 14

**TEST SETUP DRAWINGS AND PHOTOGRAPHS**
Figure 1. General Test Setup Drawing of EUT and Associated System ..... 8
Figure 2. Frequency ID of Radiated Emissions Test Setup Drawing ..... 10
Figure 3. Radiated Emissions Test Setup Drawing ..... 11
Figure 4. Radiated Emissions Test Configuration Photograph ..... 16

**APPENDICES**
Conducted & Radiated Emissions Measurement Uncertainties ..... A-1
Nemko EESI, Inc.'s Test Equipment & Facilities Calibration Program ..... B-1

# CERTIFICATION

The Radio Frequency Interference (RFI) testing, data evaluation and this report have been prepared by Nemko EESI, Inc., an independent electromagnetic compatibility consulting and test laboratory.

The testing and data collection were accomplished in accordance with the requirements of the ANSI, C63.4-1992 standard and the applicable sections of FCC, Part 15, Subpart C for intentionally radiating equipment. Refer to the Administrative Summary for a description of the test sample.

I certify the data, data evaluation and equipment configuration herein to be a true and accurate representation of the sample's radio frequency interference emission characteristics, as of the test date(s), and for the design of the test sample utilized to compile this report.

J. L. Griffin
Director of Laboratory Operations

# 1. ADMINISTRATIVE DATA AND TEST SUMMARY

## 1.1 Administrative Data

| | |
|---|---|
| CLIENT: | Medical Research Group<br>12744 San Fernando Road<br>Sylmar, CA 91342<br>(818) 362-8084<br>(818) 364-2647 – fax |
| CONTACT: | Wayne Morgan (ext. 3310) |
| DATE(S) OF TEST: | September 22 - October 1, 1999 |
| TEST SPECIFICATION: | FCC, Part 15, Subpart C, for intentional radiators (low-power transmitters) |
| EQUIPMENT UNDER TEST (EUT): | MiniMed Implant Unit (Transceiver) |
| Model Number: | MMT-2007 |
| FCC ID Number (pending): | OSU2007 |
| EUT transmitter fundamental frequency: | 262.144 kHz |

| *Specification* | *Frequency Range* | *Compliance Status* |
|---|---|---|
| FCC, CFR 47, §15.209<br>Radiated Emissions for Intentional Radiators | 9 kHz – 30 MHz | PASS |
| FCC, CFR 47, §15.209, Class "B"<br>Spurious Radiated Emissions | 30.00 MHz - 1000 MHz | PASS |

J. L. Griffin, Nemko EESI, Inc.

*Please refer to the Test Results section of this report for further details.*

# 2. SYSTEM DESCRIPTION AND CONFIGURATION

## 2.1 Description of EUT System

The MiniMed Implantable Unit (MIP) is part of an Implantable Insulin Delivery System (IIDS), which is a long-term, implantable medical device that delivers insulin to diabetic patients. The IIDS provides insulin delivery data that the patient and healthcare professionals can use to intensely manage diabetes.

The IIDS system consists of two devices - an external Personal Pump Communicator (PPC) and a surgically Implantable Unit (MIP). The PPC is an external hand-held transceiver device that will allow the user to program and communicate with the MIP. It will display messages received from the MIP and send control messages to the MIP, including Insulin Pump instructions. The PPC has a display, a push-button keypad for entering commands, an alarm, a vibration mechanism, an infrared device and a replaceable battery. The IR interface allows the PPC to be configured and downloaded with software. The MIP consists of a mechanical insulin pump, insulin reservoir, control electronics, antenna, alarm, battery and removable catheter. The catheter assembly includes a side-port for rinsing, flushing and diagnostic procedures.

The MIP will communicate with the PPC via the RF telemetry. The PPC will receive transmitted messages from the MIP, display data for the patient and healthcare professionals, and allow them to control the insulin delivery. The MIP will send alarms to the patient, either through the RF telemetry to the PPC, or using an internal audible alarm. The design includes continuous self-monitoring for faults. In the event that a fault is detected, the system will stop insulin delivery (depending on the fault) and alarm.

The MIP antenna uses a ferrite rod with a length of 1" and a diameter of 0.150". The finished antenna is a surface-mount component connected to the hybrid board through a two-wire connector. The PPC antenna is a faraday-shielded, air-coil, housed within the PPC case. The antenna assembly is connected to the hybrid board using three connectors (two for the antenna coil and one for grounding the faraday shield).

RF Telemetry is accomplished through a Transmit/Receive Front-End. The Transmitter section receives digital transmit signals TxI and TxQ from the Processor IC. These are the quadrature-modulated components of the data which are generated within the Processor IC based on a 262.144 kHz carrier. The TxI and TxQ signals are coupled directly into the antenna during transmit. Additionally, the transmit section couples the antenna to the receiver during the receive. The transmitter section is responsible for antenna tuning and the coupling of the transmit signals to the antenna while minimizing the noise and interference to the RF signal from the Processor IC. The quadrature-phase clock signals for the I and Q channels are available to the mixers at the carrier frequency. Each clock signal has a duty cycle no worse than 49%/51%.

### 2.1.1 Implant Unit (MIP) Description

The Implant Unit (MIP) is an implantable insulin pump that holds 13 mL (approximately 90 days of U-400 insulin). The MIP is capable of delivering the insulin when programmed to do so by the PPC.

The MIP incorporates a pulsatile pump mechanism, and the Insulin Pump is directly controlled by the MIP electronics. The MIP releases insulin through the pump mechanism under commands from the PPC, which are validated by the MIP prior to execution. Insulin delivery data is stored for future downloading to the PPC. Control electronics have self-checking mechanisms to reduce the possibility of calculating and reporting an incorrect value, and the redundant control electronics architecture ensures fail-safe behavior and avoids over-delivery. The MIP has an internal alarm with minimum loudness of 70 dB (measured at 3 inches from the device).

The MIP assembly includes a detachable catheter that provides a pathway for the insulin from the pump in to the intraperitoneal cavity of the patient. The catheter features a sideport that allows for non-surgical diagnosis of a blockage using pressure. The sideport allows introduction of a refill needle and a small syringe to clear an obstructed catheter using up to 110 psi of pressure. The sideport further allows the introduction of a refill needle and a pipet to verify pump stroking.

The catheter features a check valve that seals at between 0.5 to 3 psid and may provide a redundant valve outside the pump to prevent medication back flowing into the MIP reservoir.

### 2.1.2 Personal Pump Communicator (PPC) Description

The PPC contains two separate circuit boards, a RF Board and a Digital Board. The boards are connected by a 22-pin board-to-board connector, CN1 of the RF Board and CN2 of the Digital Board.

The RF Board contains an up-converter, external serial ROM (SEEPROM), vibrator driver and connector, piezo alarm, battery-power flex cable connector and RF front-end circuitry (a transmitter and a receiver which consists of a filter and a 3-stage amplifier).

The Digital Board contains the rest of the system circuitry. It includes the processor of the system, external SRAM, power manager, external IO, LCD, EL backlight, UART and IrDA port, keypad connector, interrupt generator and other supporting logic circuitry.

The main source of power is a single AA battery (VAABATT). This voltage is up-converted to +3.45 V (VCC) by a switching type up-converter (LT1307). VCC is the main operating power for the entire circuit. A coin-type backup battery (VCOINBATT) of +3.0 V nominal is used to power the SRAM when the AA battery is absent (depleted or removed). When VCC falls below a threshold, this backup battery is switched in as a source of VPOS. The switching is done by the battery management IC (MAX793S).

A custom processor IC is used as a system processor. This IC (U7 on the Digital Board) incorporates an 8086 processor core and various custom support logics. The processor operates with a 1.049100 MHz clock rate generated by an on-chip oscillator in conjunction with an external crystal.

The communication link between the PPC and the MIP is RF telemetry at 262.144 kHz. The RF telemetry subsystem in composed of analog and digital modules. The digital module includes a QFAST modulator/demodulator, a control and a timing logic circuit, all of which are integrated in the Processor IC. The analog module consists of a RF front-end circuit and a mixer. The mixer is also integrated in the Processor IC. The RF front-end circuit is implemented on the PPC board, and consists of a transmitter and a receiver, which is in turn composed of a band-pass filter and a 3-stage amplifier.

Variable capacitors are provided for the fine-tuning of the antenna, the filter, the second and the third amplifier stages. R67 and C97 on the RF Board filter the power for the RF transmitter/receiver circuit. R21 and C37 of the Digital Board filter the power for the RF mixer circuit in the processor.

A 150Ω dummy load (R68 of the RF Board) is connected to a gate controlled by signals RF_RX_ANA_PWR and HEN_QUIET. To have this load automatically turned on during RF reception, set the HEN_QUIET logic high (bit 4 of output port 0x04). RF_RX_ANA_PWR is set automatically by the processor during RF reception. The purpose of this load is to force the up-converter to operate at the 600 kHz nominal switching frequency instead of any other frequency or burst mode. This helps to reduce noise during RF reception.

## 2.2 System Components and Power Cables

| DEVICE | MANUFACTURER<br>MODEL #<br>SERIAL # | POWER CABLE |
|---|---|---|
| EUT - MiniMed Implant Unit (Transceiver) | Medical Research Group<br>MMT-2007<br>UNK | N/A (Battery only) |
| Personal Pump Communicator (Transceiver) | Medical Research Group<br>MMT-313x<br>UNK | N/A (Battery only) |
| Computer | Medical Research Group<br>Windows-based Clone<br>N/A | 2m, unshielded, 18 AWG, 3-wire, IEC connector |
| Monitor | KDS<br>VS-550<br>0495627935 | 2m, unshielded, 18 AWG, 3-wire, IEC connector |
| Keyboard | Keytronic<br>K280W<br>H904061714 | N/A |
| Infrared Adapter | IR Ready<br>Actisys<br>N/A | N/A |

## 2.3 System Components and Power Cables

| CONNECTION | I/O CABLE |
|---|---|
| PPC to IR Adapter | *(x2)* 12' fiber optic cables |
| IR Adapter to Computer | 2m, unshielded, 26 AWG, 9-wire, DB9 connectors |
| Computer to Keyboard | 2m, unshielded, 26 AWG, 6-wire, PS/2 connector to hardwired |
| Computer to Monitor | 1.5m, shielded, 24 AWG, 15-wire, DB15 connector to hardwired |

# 3. DESIGN MODIFICATIONS FOR COMPLIANCE

***Device:*** MiniMed Implant Unit (Transceiver)

***Model:*** MMT-2007

No design modifications were made to the EUT during testing.

# 4. DESCRIPTION OF TEST SITE AND EQUIPMENT

## 4.1 Description of Open Area Test Site

The test site is located at 11696 Sorrento Valley Road, Suite F, San Diego, CA 92121. The site is physically located 18 miles Northwest of downtown San Diego. The general area is a valley 1.5 miles east of the Pacific Ocean. This particular part of the valley tends to minimize ambient levels, i.e. radio and TV broadcast stations and land mobile communications. The ten-meter site is located behind the office/lab building. It conforms to the normalized site attenuation limits and construction specifications as set in the EN 55022 (1987), CISPR 16 and 22 (1985) and ANSI C63.4-1992 documents. The site attenuation characteristics are verified for compliance every year and was last registered with the Federal Communications Commission on October 21, 1996, FCC Document Number 31040/SIT (1300B3).

## 4.2 Test Equipment

The following test equipment was used to collect data for this report. All devices used were of current calibration and of the type required in the applicable documents section of this report.

| DEVICE TYPE | MANUFACTURER | MODEL | ASSET # | CAL. DATE | CAL. DUE |
|---|---|---|---|---|---|
| Antenna, Biconical | EMCO | 3104 | 128 | 6/23/99 | 6/23/00 |
| Antenna, Loop | Electro-Metrics | ALR-25M | 134 | 3/18/99 | 3/18/00 |
| Quasi-Peak Adapter | Hewlett Packard | 85650A | 538 | 9/17/99 | 9/17/00 |
| Spectrum Analyzer Display | Hewlett Packard | 85662A | 537 | 9/17/99 | 9/17/00 |
| Spectrum Analyzer | Hewlett Packard | 8566B | 711 | 9/17/99 | 9/17/00 |
| RF Preselector | Hewlett Packard | 85685A | 673 | 7/22/99 | 7/22/00 |
| Open Area Test Site (OATS) | Nemko EESI, Inc. | OATS1 | N/A | 8/14/99 | 8/14/00 |

# 5. DESCRIPTION OF TESTING METHODS

## 5.1 Introduction

As required in 47 CFR, Parts 2 and 15, the methods employed to test the radiated and conducted emissions (as applicable) of the EUT are those contained within the American National Standards Institute (ANSI) document C63.4-1992, titled "Methods of Measurement of Radio-Noise Emissions from Low-Voltage Electrical and Electronic Equipment in the Range of 9 kHz to 40 GHz." All applicable FCC Rule Sections that provide further guidance for performance of such testing are also observed.

For General Test Configuration please refer to Figure 1 on the following page.

# Figure 1. General Test Setup Drawing of EUT and Associated System

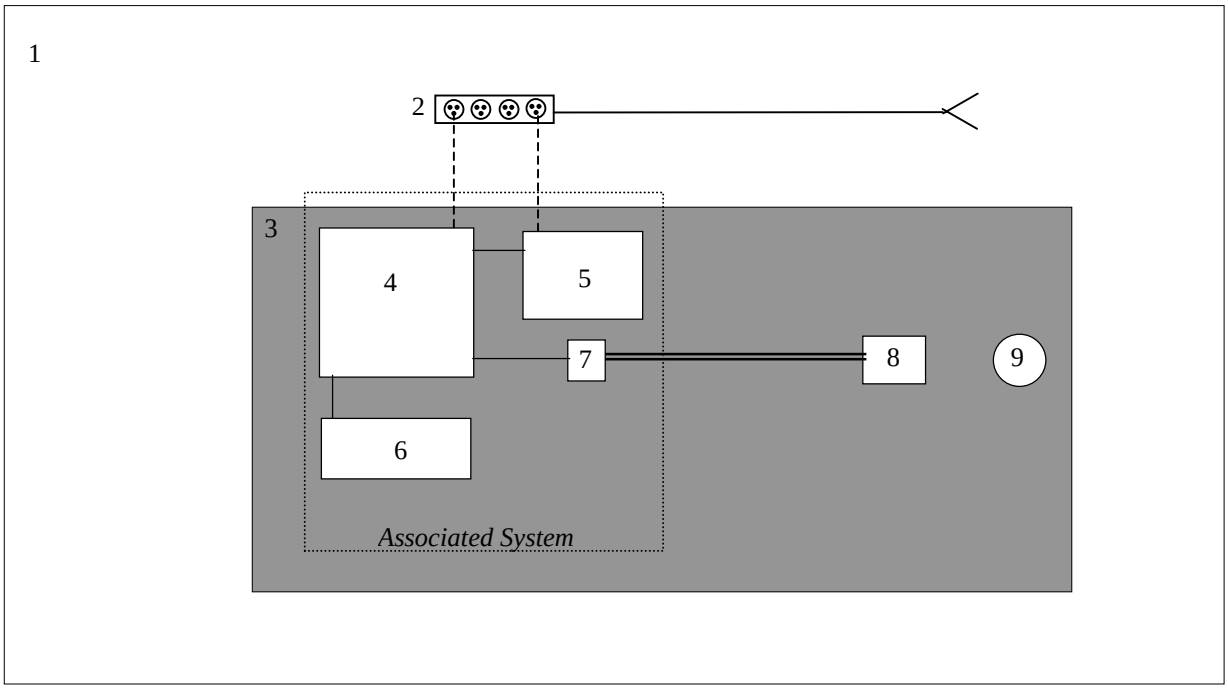


*NOT TO SCALE*

## CONFIGURATION LEGEND

1. Test Laboratory
2. AC Power for Devices (120V, 60 cycles, single phase)
3. Non-Conducting table 80 cm above ground plane
4. Computer
5. Monitor
6. Keyboard
7. IR Device
8. Personal Pump Communicator
9. EUT: Implant Unit

## 5.2 Configuration and Methods of Measurements for Radiated Emissions

Section 8 of ANSI C63.4 determines the general configuration and procedures for measuring the radiated emissions of equipment under test. Initially, the primary emission frequencies are identified inside the test lab by positioning a broadband receive antenna one meter from the EUT to locate frequencies of significant radiation. Normally this is done inside a shielded chamber to eliminate ambients. Next, the EUT and associated system are placed on a turntable on an 10 meter open area test site (registered with the FCC in accord with its Rules and ANSI C63.4) and the receive antenna is located at a distance of ten or three meters from the EUT.

The EUT and associated system are configured to operate with a series of periodic transmissions, representing a "normally operating" mode. To ensure that the maximum emission at each discrete frequency of interest is observed, the receive antenna is varied in height from one to four meters and rotated to produce horizontal and vertical polarities, and the turntable is also rotated to determine the worst emitting configuration.

For Frequency ID and Radiated Emissions test configurations please refer to Figures 2 and 3 on the following pages.

# Figure 2. Frequency ID of Radiated Emissions Test Setup Drawing

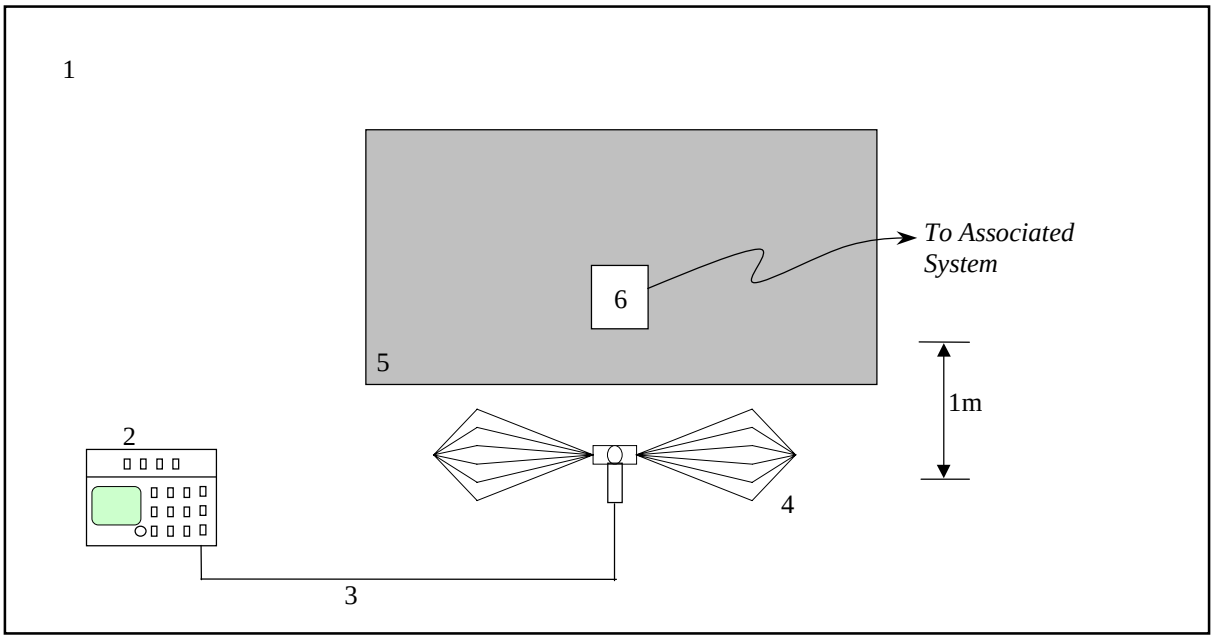


***NOT TO SCALE***

## CONFIGURATION LEGEND

1. Test Laboratory
2. Spectrum Analyzer with Quasi-Peak Adapter
3. Coax interconnect from Antenna to Spectrum Analyzer
4. Receive Antenna (basic relative position)
5. Non-Conducting table 80 cm above ground plane
6. EUT: MiniMed Implant Unit (Transceiver)

# Figure 3. Radiated Emissions Test Setup Drawing

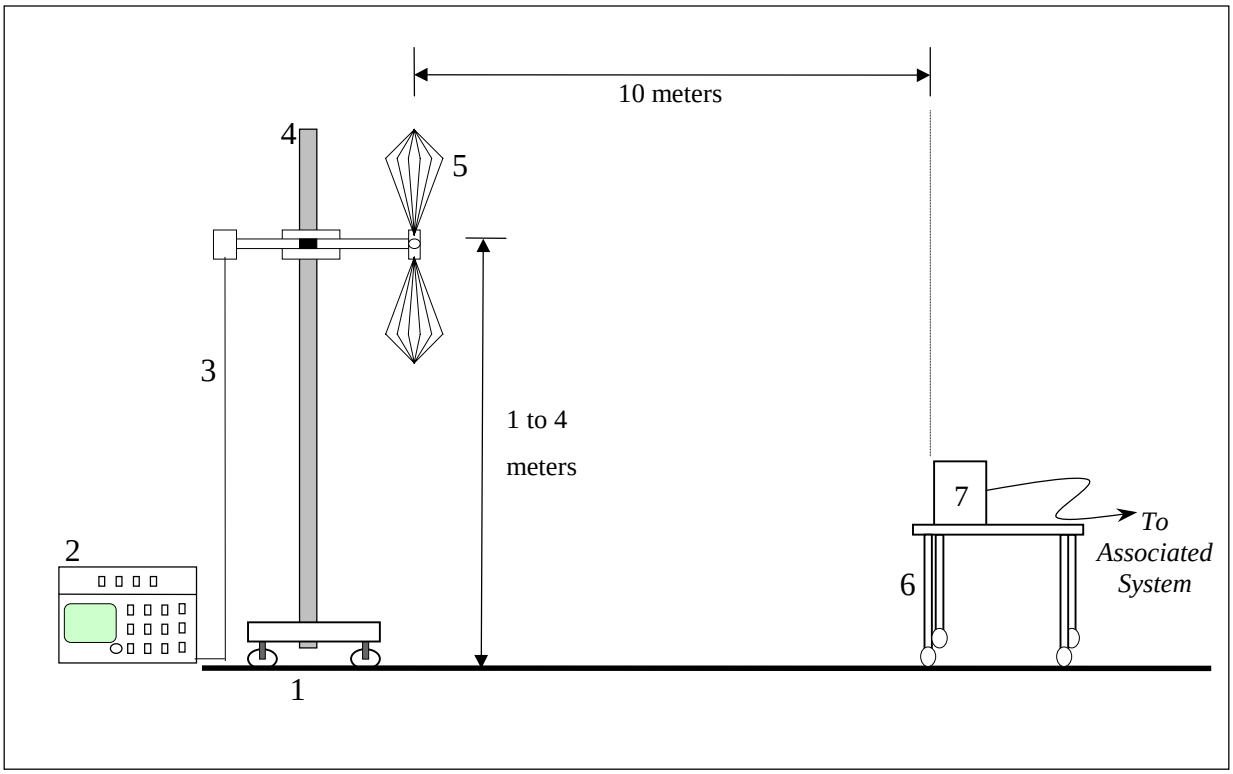


NOT TO SCALE

## CONFIGURATION LEGEND

1. Ground Plane (11 x 17 meters)
2. Spectrum Analyzer with Quasi-Peak Adapter
3. Coax interconnect from Receive Antenna to Spectrum Analyzer
4. Antenna Mast with motorized mounting assembly
5. Receive Antenna (basic relative position)
6. Non-Conducting table 80cm above ground plane
7. EUT: MiniMed Implant Unit (Transceiver) and Personal Pump Communicator

## 5.3 Radiated Emission Field Strength

47 CFR sections §15.201, §15.203, §15.205, §15.209 specify the general emission specification limits and several specific parameter measures for low power transmitters operating in the frequency ranges. Compliance to the specific sections are listed below.

**§15.203:** The device under test has no external antenna. The user has no practical means to attach an external antenna

**§15.205, §15.209:** These sections specify the radiated emissions limits and restricted bands of operation. Please refer to the data sheets attached to this report for a tabulated list of the emission frequencies and their compliance status.

# 6. TEST RESULTS

## 6.1 Radiated Emissions Test Data

**Nemko EESI, Inc.**
**FCC, Part 15C, 15.209 Radiated Emissions Data Sheet**
**(10m Open Area Test Site)**

*Client:* **Medical Research Group**
*EUT:* **Tranceivers**
*Model #:* **MMT-2007 & MMT-313X**

*Conducted by:* M. W. K
*Date of Test:* **10-01-99**
*Test Distance, Amp. gain:* **10 m, 59 dB**

| Frequency (MHz) | Spectrum Analyzer Reading at 10m (dBμV) | Antenna Polori-zation (vertical or horizontal) | $f_O$ | Amp. Gain & Cable Loss, Distance & Antenna Factor Correction for 10 m (dBuV/m) | Total Interference Level at 10m (dBμV/m) | Emission Spec. Limit at 10m (dBμV/m) | Difference Margin (dB) |
|---|---|---|---|---|---|---|---|
| 0.262 | -3.1 | v | $f_0$ | 42.4 | -19.7 | 19.2 | -38.9 |

*Note: No additional harmonics ($f_2$-$f_{10}$) of the fundamental frequency were observed within 10dB of the limit.*

***Test Conditions:*** Standard radiated emissions test set up on FCC registered open field site. The highest emissions for all antenna heights, polarities, and table orientations are the only emissions recorded.

## 6.2 Spurious Radiated Emissions Test Data

Nemko EESI, Inc.
FCC, Part 15C, Section 15.209 Spurious Radiated Emissions Data Sheet
(10m Open Area Test Site)

*Client:* **Medical Research Group**
*EUT:* **Implantable Insulin Delivery System**
*Model #:* **MMT-2007 & MMT-313X (Boot Loader Mode)**

*Conducted by:*_____
*Date of Test:* **09/22/99**
*Frequency Range:* **30-1000MHz**

| Frequency (MHz) | Spectrum Analyzer Reading (dBμV) | Antenna Polarization (V or H) | Amp. Gain & Cable Loss, Distance & Antenna Factor Correction for 10m (dB/m) | Total Interference Level Corrected for 10 m (dBμV/m) | Emission Spec. Limit at 10 m (dBμV/m) | Difference Margin (dB) |
|---|---|---|---|---|---|---|
| 126.800 | 9.7 | h | 14.3 | 24.0 | 33.5 | -9.5 |
| 127.980 | 7.0 | v | 13.7 | 20.7 | 33.5 | -12.8 |
| 135.700 | 9.8 | v | 12.9 | 22.7 | 33.5 | -10.8 |
| 139.280 | 8.6 | v | 13.0 | 21.6 | 33.5 | -11.9 |
| 139.880 | 8.8 | v | 13.0 | 21.8 | 33.5 | -11.7 |
| 146.100 | 7.9 | v | 14.0 | 21.9 | 33.5 | -11.6 |

*Test Conditions:* Standard radiated emissions test set up on FCC registered open field site. The highest emissions for all antenna heights, polarities, and table orientations are the only emissions recorded.

**Medical Research Group - Implantable Insulin Delivery System: MMT-2007 & MMT-313X (Boot Loader Mode)**
**Radiated Emissions Profile (09/22/99) - Nemko EESI**

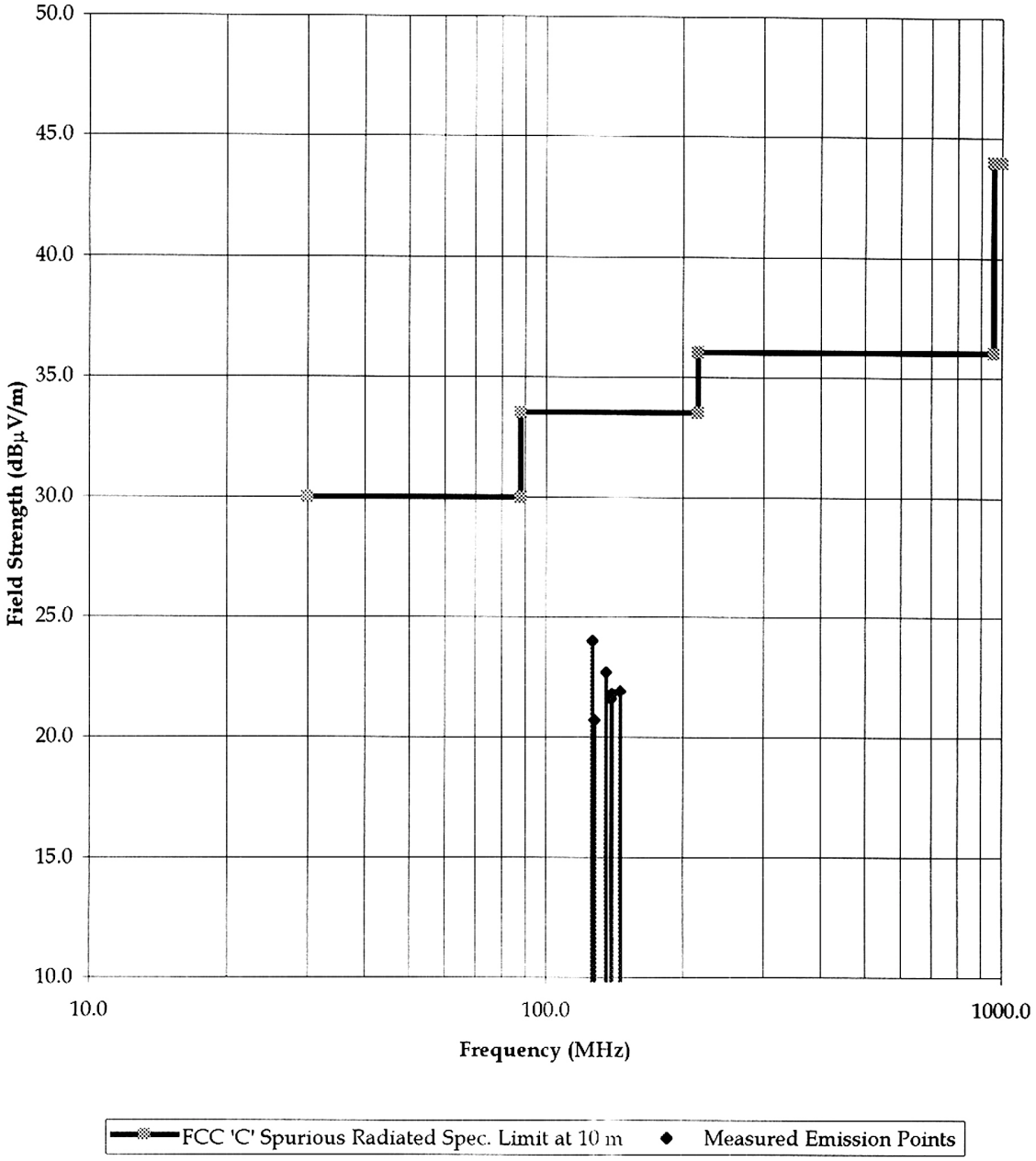

# Figure 4. Radiated Emissions Test Configuration Photograph

# APPENDIX A
# Conducted & Radiated Emissions Measurement Uncertainties

## 1. Introduction

ISO Guide 25(1990) and ANSI/NCSL Z540-1(1994) require that all measurements contained in a test report be "traceable". "Traceability" is defined in the *International Vocabulary of Basic and General Terms in Metrology* (ISO: 1993) as: "the property of the result of a measurement... whereby it can be related to stated references, usually national or international standards, through an unbroken chain of comparisons, *all having stated uncertainties*".

The purposes of this Appendix are to "state the *Measurement Uncertainties*" of the conducted emissions and radiated emissions measurements contained in Section 5 of this Test Report, and to provide a practical explanation of the meaning of these measurement uncertainties.

## 2. Statement Of The Worst-Case Measurement Uncertainties For The Conducted And Radiated Emissions Measurements Contained In This Test Report

**Table 1: Worst-Case Expanded Uncertainty "U" of Measurement for a k=2 Coverage Factor**

| Conducted Emissions Measurement Detection Systems | Applicable Frequency Range | "U" for a k=2 Coverage Factor | Applicable (If checked) |
|---|---|---|---|
| HP8568B Spectrum Analyzer with QPA and HP8447F Preamplifier | 150 kHz - 30 MHz | +/- 3.0 dB | |
| HP8566B Spectrum Analyzer with QPA and Preselector | 9 kHz - 30 MHz | +/- 2.9 dB | |
| | | | |
| **Radiated Emissions Measurement Detection Systems** | **Applicable Frequency Range** | **"U" for a k=2 Coverage Factor** | **Applicable (If checked)** |
| HP8568B Spectrum Analyzer with QPA & HP8447F Preamplifier | 30 MHz - 200 MHz | +4.0 dB, -4.1 dB | |
| HP8568B Spectrum Analyzer with QPA & HP8447F Preamplifier | 200 MHz-1000 MHz | +/- 3.5 dB | |
| HP8566B Spectrum Analyzer with QPA & Preselector | 30 MHz - 200 MHz | +3.9 dB, -4.0 dB | |
| HP8566B Spectrum Analyzer with QPA & Preselector | 200 MHz-1000 MHz | +/- 3.4 dB | |
| HP8566B Spectrum Analyzer with QPA & HP 8449A Preamplifier | 1 GHz - 18 GHz | +2.5 dB, -2.6 dB | |
| HP8566B Spectrum Analyzer with QPA & HP8449A Preamplifier | 18 GHz - 40 GHz | +/- 3.4 dB | |

NOTES:
1. Applies to 3 and 10 meter measurement distances
2. Applies to all valid combinations of Transducers (i.e. LISNs, Line Voltage Probes, and Antennas, as appropriate)
3. Excludes the Repeatability of the EUT

## 3. Practical Explanation Of The Meaning Of The Conducted And Radiated Emissions Measurement Uncertainties

In general, a "Statement of Measurement Uncertainty" means that with a certain (specified) confidence level, the "true" value of a measurand will be between a (stated) upper bound and a (stated) lower bound.

In the specific case of EMC Measurements in this test report, the measurement uncertainties of the conducted emissions measurements and the radiated emissions measurements have been calculated in accordance with the method detailed in the following documents:

- *ISO Guide to the Expression of Uncertainty in Measurement* (ISO, 1993)
- NIS 81:1994, *The Treatment of Uncertainty in EMC Measurements* (NAMAS, 1994)
- NIST Technical Note 1297(1994), *Guidelines for Evaluating and Expressing the Uncertainty of NIST Measurement Results* (NIST, 1994)

The calculation method used in these documents requires that the stated uncertainty of the measurements be expressed as *an "expanded uncertainty", U, with a k=2 coverage factor*. The practical interpretation of this method of expressing measurement uncertainty is shown in the following example:

EXAMPLE:

Assume that at 39.51 MHz, the (measured) radiated emissions level was equal to +26.5 dBμV/m, and that the +/- 2σ (i.e. 95% confidence level) measurement uncertainty was +/- 3.4 dB.

In the example above, the phrase "k = 2 Coverage Factor" simply means that the measurement uncertainty is stated to cover +/-2 standard deviations (i.e. a 95% confidence interval) about the measurand. The measurand is the radiated emissions measurement of +26.5 dBμV/m at 39.51 MHz, and the 95% bounds for the uncertainty are –3.4 dB to + 3.4 dB. One can thus be 95% confident that the "true" value of the radiated emissions measurement is between +23.1 dBμV/m and +29.5 dBμV/m. *In effect, this means that in the above example there is only a 2.5% chance that the "true" radiated emissions value exceeds +29.5 dBμV/m.*

# APPENDIX B
## Nemko EESI, Inc.'s Test Equipment & Facilities Calibration Program

Nemko EESI, Inc. operates a comprehensive Periodic Calibration Program in order to ensure the validity of all test data. Nemko EESI's Periodic Calibration Program is fully compliant to the requirements of NVLAP Policy Guide PG-1-1988, ANSI/NCSL Z540-1 (1994), ISO 10012-1 (1993-05-01), ISO Guide 25 (1990), ISO-9000 and EN 45001. Nemko EESI, Inc.'s calibration program therefore meets or exceed the US national commercial and military requirements [N.B. ANSI/NCSL Z540-1 (1994) replaces MIL-STD-45662A].

Specifically, all of Nemko EESI's *primary reference standard devices* (e.g. vector voltmeters, multimeters, attenuators and terminations, RF power meters and their detector heads, oscilloscope mainframes and plug-ins, spectrum analyzers, RF preselectors, quasi-peak adapters, interference analyzers, impulse generators, signal generators and pulse/function generators, field-strength meters and their detector heads, etc.) and certain *secondary standard devices* (e.g. RF Preamplifiers used in CISPR 11/22 and FCC Part 15/18 tests) are periodically recalibrated by:

- A Nemko EESI-approved independent (third party) metrology laboratory that uses NIST-traceable standards and that is ISO Guide 25-accredited as a calibration laboratories by NIST; or,
- A Nemko EESI-approved independent (third party) metrology laboratory that uses NIST-traceable standards and that is ISO Guide 25-accredited as a calibration laboratory by another accreditation body (such as A2LA) that is mutually recognized by NIST; or,
- A manufacturer of Measurement and Test Equipment (M&TE), if the manufacturer uses NIST-traceable standards and is ISO Guide 25-accredited as calibration laboratory either by NIST or by another accreditation body (such as A2LA) that is mutually recognized by NIST; or
- A manufacturer of M&TE (or by a Nemko EESI-approved independent third party metrology laboratory) that is not ISO Guide 25-accredited. (In these cases, Nemko EESI conducts an annual audit of the manufacturer or metrology laboratory for the purposes of proving traceabilty to NIST, ensuring that adequate and repeatable calibration procedures are being applied, and verifying conformity with the other requirements of ISO Guide 25).

In all cases, the entity performing the Calibration is required to furnish Nemko EESI with a calibration test report and/or certificate of calibration, and a "calibration sticker" on each item of M&TE that is successfully calibrated.

Calibration intervals are normally one year, except when the manufacture advises a shorter interval (e.g. the HP 8568B Spectrum Analyzer is recalibrated every six months) or if US Government directives or client requirements demand a shorter interval. Items of instrumentation/related equipment which fail during routine use, or which suffer visible mechanical damage (during use or while in transit), are sidelined pending repair and recalibration. (Repairs are carried out either in-house [if minor] or by a Nemko EESI-approved independent [third party] metrology laboratory, or by the manufacturer of the item of M&TE).

Each antenna used for CISPR 11 and CISPR 22 and FCC Part 15 and Part 18 radiated emissions testing (and for testing to the equivalent European Norms) is calibrated annually by either a NIST (or A2LA) ISO Guide 25-Accredited third-party Antenna Calibration Laboratory or by the antenna's OEM if the OEM is NIST or A2LA ISO Guide 25-accredited as an antenna calibration laboratory. The antenna calibrations are performed using the methods specified in Annex G.5 of CISPR 16-1(1993) or ANSI C63.5-1991, including the "Three-Antenna Method". Certain other kinds of antennas (e.g. magnetic-shielded loop antennas) are calibrated annually by either a NIST (or A2LA) ISO Guide 25-accredited third-party antenna calibration laboratory, or by the antenna's OEM if the OEM is NIST or A2LA ISO Guide 25-accredited as an antenna calibration laboratory using the procedures specified in the latest version of SAE ARP-958.

In accordance with FCC and other regulations, Nemko EESI recalibrates its suite of antennas used for radiated emissions tests on an annual basis. These calibrations are performed as a precursor to the FCC-required annual revalidation of the Normalized Site Attenuation properties of Nemko EESI's Open Area Test Site. Nemko EESI, Inc. uses the procedures given in both Subclause 16.6 and Annex G.2 of CISPR 16-1 (1993), and, ANSI C63.4-1992 when performing the normalized site attenuation measurements.