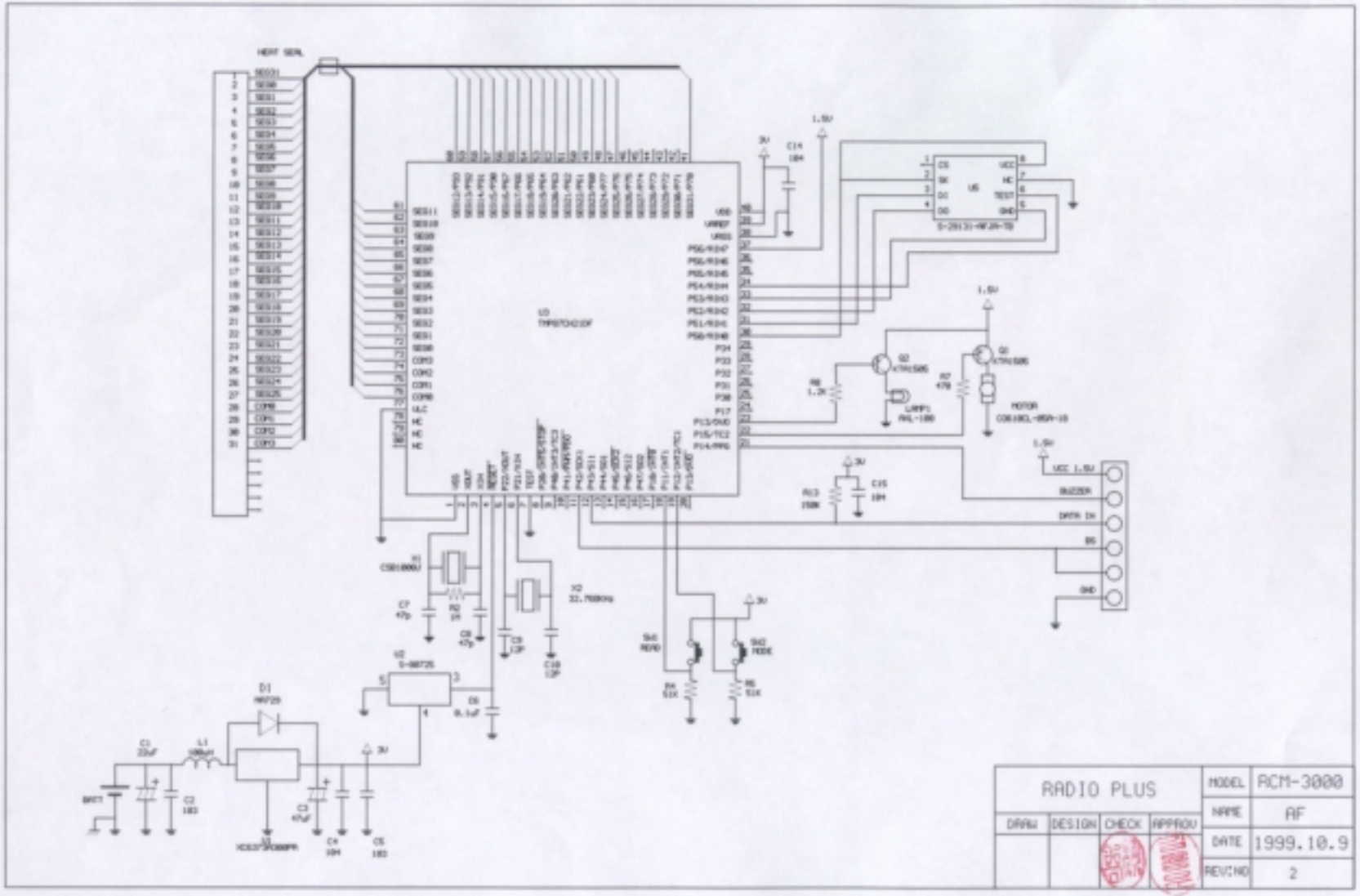
HEAT SEAL
U0
TMP87CH21DF
U5
6-2913-4F3A-TB
Q2
CTN150K
LAMP1
PAL-180
MOTOR
CD610CL-4BA-10
VCC 1.5V
BUZZER
DATA IN
BS
GND
X1
32.768KHz
SW1
MODE
U1
S-88725
D1
MA729
BATT
XC6127C300MR
RADIO PLUS
MODEL
RCM-3000
NAME
AF
DATE
1999.10.9
REV.NO
2
DRAW
DESIGN
CHECK
APPROV

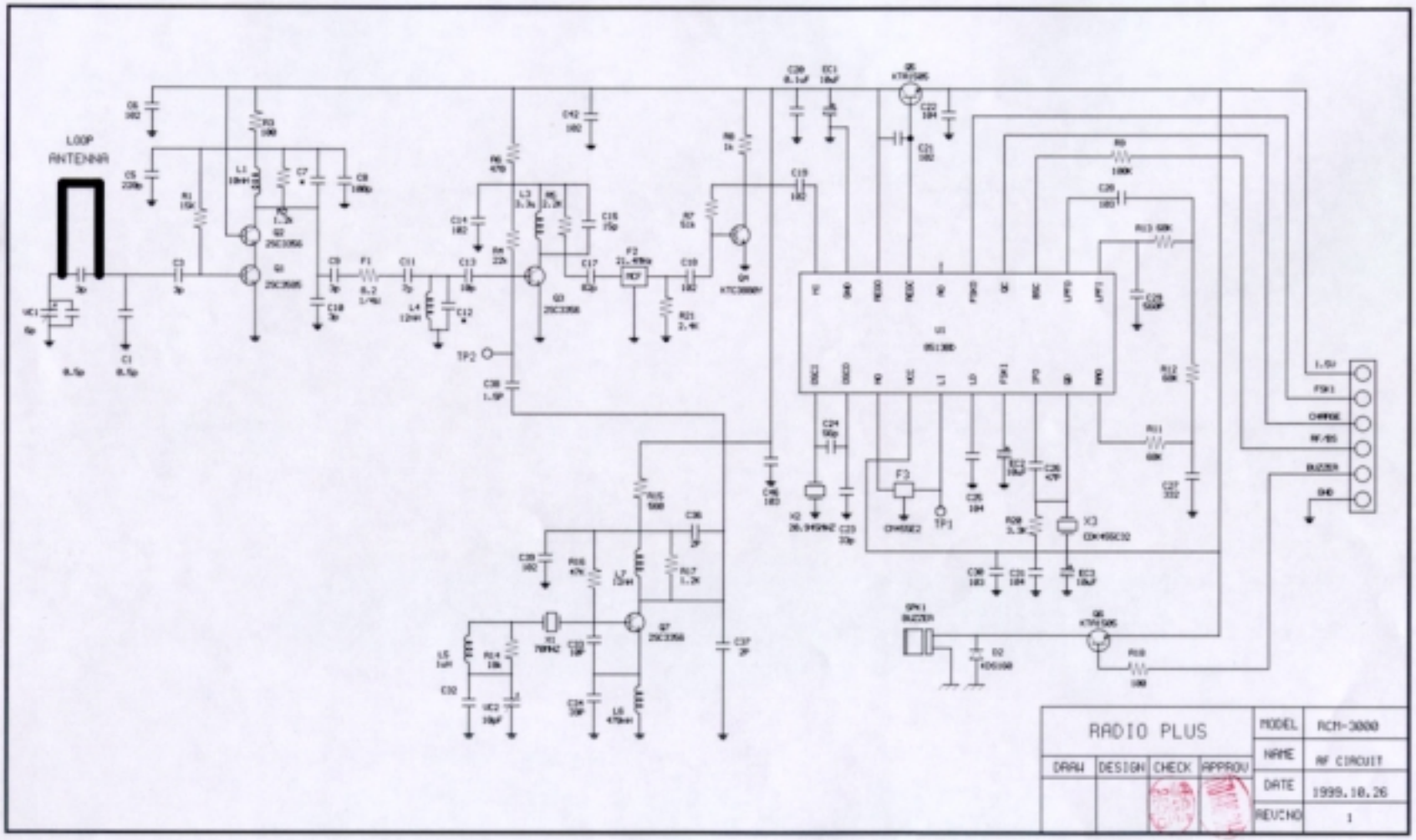
LOOP
ANTENNA
RADIO PLUS
MODEL
RCM-3000
NAME
RF CIRCUIT
DATE
1999.10.26
REV.NO
1
DRAW
DESIGN
CHECK
APPROV