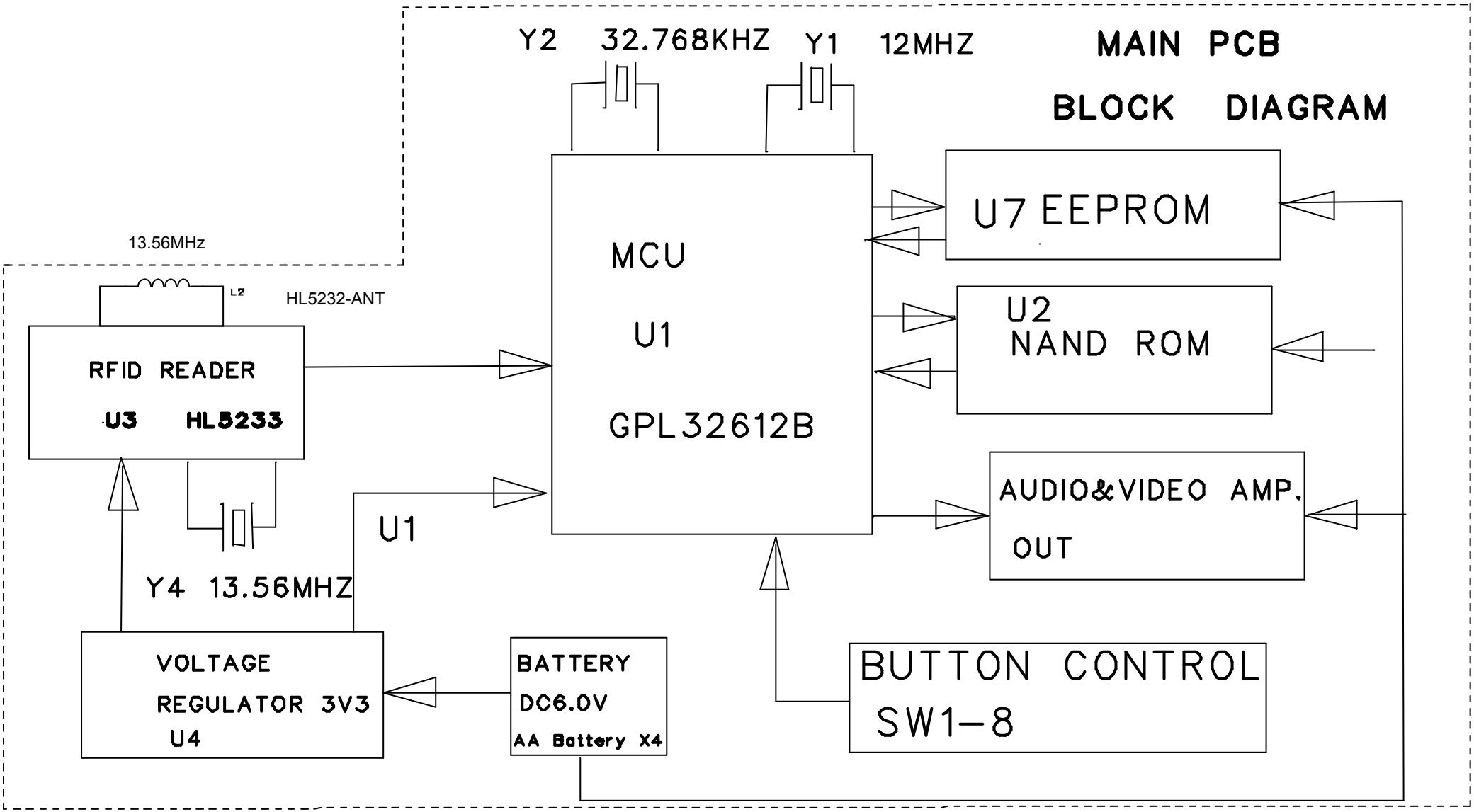

COMPANY: JAKKS (HONG KONG) LIMITED	
TITLE: Block DIAGRAM For DC	
MODEL: 78425	
DATE: 2014.5.20	Page :1 of 1
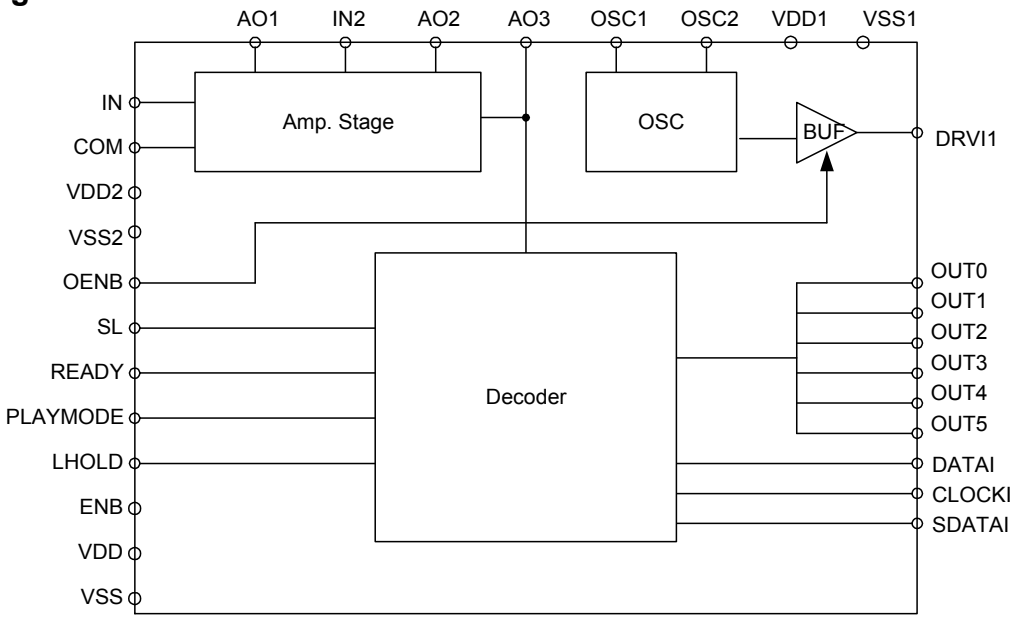
Block Diagram