83626_83629 Iron Man Arc Cycle IS
size: 16.5”W x 8.5”H x 2
Color: Grayscale

ADJUSTMENT

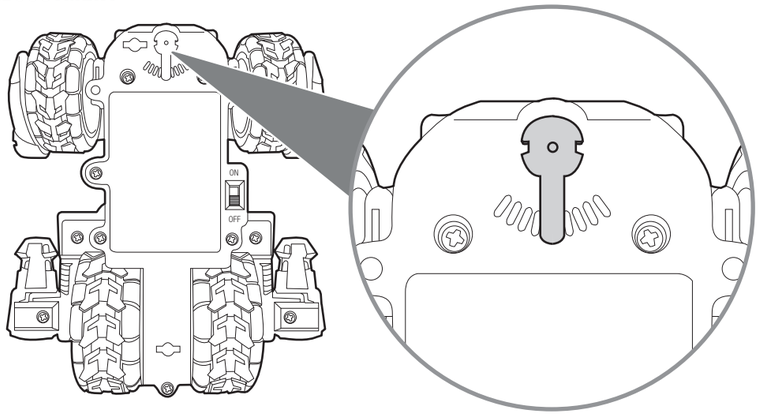

Adjust TRIM SWITCH on bottom of the VEHICLE to ensure precision driving.

TROUBLESHOOTING

PROBLEM	POSSIBLE CAUSE	SOLUTION
Vehicle won’t move.	Vehicle / Remote Control switch is switched OFF.	Move switch to ON position.
	Weak Remote Control batteries.	Press any direction button. If indicator light does not activate, replace batteries in the Remote Control.
	Vehicle is stuck.	Move vehicle to a smoother surface, clean tires, make sure surface or floor is clean as well.
	Weak vehicle batteries.	Replace batteries.
	Remote Control is not close enough to vehicle.	Make sure the Remote Control is placed within the signal receiving range.

This device complies with Part 15 of the FCC Rules. Operation is subject to the following two conditions: (1) this device may not cause harmful interference, and (2) this device must accept any interference received, including interference that may cause undesired operation.
WARNING: Changes or modifications to this unit not expressly approved by the party responsible for compliance could void the user’s authority to operate the equipment.
NOTE: This equipment has been tested and found to comply with the limits for Class B digital device, pursuant to Part 15 of the FCC Rules. These limits are designed to provide reasonable protection against harmful interference in a residential installation. This equipment generates, uses and can radiate radio frequency energy and, if not installed and used in accordance with the instructions, may cause harmful interference to radio communications. However, there is no guarantee that interference will not occur in a particular installation. If this equipment does cause harmful interference to radio or television reception, which can be determined by turning the equipment off and on, the user is encouraged to try to correct the interference by one or more of the following measures:
- Reorient or relocate the receiving antenna.
- Increase the separation between the equipment and receiver.
- Connect the equipment into an outlet on a circuit different from that to which the receiver is connected.
- Consult the dealer or an experienced radio/TV technician for help.

JAKKS Pacific® Battery, Solar or Electrically-Operated Toy 90 DAY LIMITED WARRANTY

Thanks for purchasing a great JAKKS Pacific® product! Please immediately register your product online at www.jakks.com/warranty. Registration is not required for the effectiveness of this limited warranty.

IMPORTANT NOTICE TO CONSUMER:
This 90 DAY LIMITED WARRANTY applies to the original product purchaser, provided the product: 1) was purchased from an authorized JAKKS™ distributor/dealer/retailer,and
2) is returned at your expense, postage pre-paid and insured, along with the original dated sales receipt to the address noted below. Please save a copy of your original sales receipt, as the original receipt will not be returned to you.
If you return the product to us without the original dated sales receipt, this warranty coverage will not apply. If the product is determined by JAKKS to be defective and returned to JAKKS within the 90 day warranty period, we will (at our option) repair or replace it. Return shipment to you may take up to 6 weeks, depending upon your location. If your product is repaired or replaced, it will be warranted for the longer of the original warranty or for 30 days after warranty service.

SCOPE OF LIMITED WARRANTY: The product is warranted to be: a) tested and inspected before shipment, and b) free of defects in material and workmanship for 90 days from date of purchase. If a covered defect occurs within the warranty period, then at our sole option, we will repair or replace the product or provide you with another product of equal value.

WHAT IS NOT COVERED BY LIMITED WARRANTY:
THIS WARRANTY IS VOID IF THE PRODUCT HAS BEEN MODIFIED OR REPAIRED BY USER OR OTHERS OR IF IT HAS BEEN DAMAGED AS A RESULT OF ACCIDENT, IMMERSION IN WATER, NEGLECT, ABUSE, MISUSE, BATTERY LEAKAGE, IMPROPER BATTERY INSTALLATION, UNAUTHORIZED SERVICE, LOSS OF PARTS, WEATHER, ACTS OF GOD, ANY ACTION OR OMISSION WHICH CONSTITUTES A DEVIATION FROM THE OPERATING INSTRUCTIONS, OR ANY OTHER CAUSES NOT ARISING OUT OF DEFECTS IN WORKMANSHIP OR MATERIALS.

EXCLUSIONS FROM LIMITED WARRANTY: THIS WARRANTY IS EXCLUSIVE OF AND IN LIEU OF ALL OTHER EXPRESS OR IMPLIED WARRANTIES RELATED TO THIS PRODUCT, INCLUDING ANY IMPLIED WARRANTIES OF MERCHANTABILITY OR FITNESS FOR A PARTICULAR PURPOSE. SPECIAL, INCIDENTAL AND CONSEQUENTIAL DAMAGES ARISING FROM
POSSESSION, USE, OR MALFUNCTION OF THIS PRODUCT ARE EXCLUDED BOTH FOR PROPERTY DAMAGE AND PERSONAL INJURY TO THE EXTENT LEGALLY PERMITTED.

ADDITIONAL LEGAL RIGHTS: This warranty provides specific legal rights. You may have other or different rights in your state or country.

QUESTIONS OR COMMENTS: If you experience product difficulties or have questions or comments, you may contact our Consumer Relations department as follows:
Phone: 877-875-2557 (toll-free, North America only) or 909-594-7771 x560 (Monday-Friday, 7:30AM-4:30PM Pacific/GMT -8).
Mail: JAKKS Consumer Relations, 21749 Baker Parkway, Walnut, California USA 91789.
Email: consumers@jakks.com

WHEN WRITING TO US: Please include: 1) product name;
2) item number; 3) purchase date; 4) description of the problem being experienced; and 5) your name, address and phone number. Additionally, if eligible under the warranty and so advised by JAKKS Consumer Relations, also include the defective product and the ORIGINAL dated sales receipt evidencing product purchase. Please retain a copy of your receipt.

080309

MARVEL AVENGERS ASSEMBLE XPV XTREME PERFORMANCE VEHICLES

27MHz

4+
#83626
#83629

IRON MAN ARC CYCLE INSTRUCTIONS

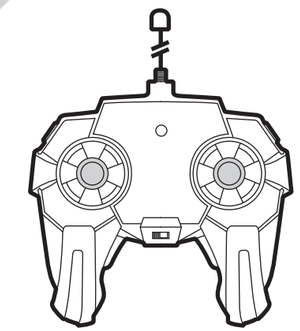

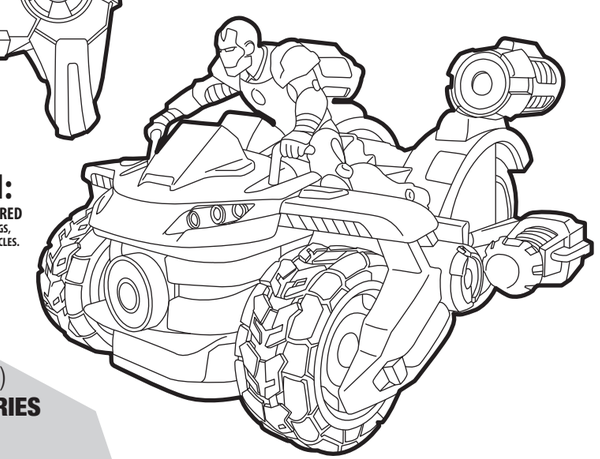

⚠ CAUTION:
ADULT SUPERVISION REQUIRED
ALWAYS PLAY IN SAFE SURROUNDINGS, AWAY FROM STREETS OR MOVING VEHICLES.

VEHICLE:
X3 1.5V AAA (LR03)
ALKALINE BATTERIES REQUIRED
NOT INCLUDED

REMOTE CONTROL:
X1 9V (6LR61)
ALKALINE BATTERY REQUIRED
NOT INCLUDED

CONTENTS:
- FULL FUNCTION RC VEHICLE
- REMOTE CONTROL

TM & ©2015 Manufactured by JAKKS Pacific, Inc., 22619 PCH, Malibu, CA 90265 U.S.A.
All other symbols, marks, logos, and designs (collectively “Trademarks”) are Trademarks of and proprietary to their respective owners and used under license. Contents may vary in style, color, shape and decoration from images shown on package or in advertising.
Questions or comments? www.jakks.com, consumers@jakks.com, or 1-877-875-2557 in North America.
Warning. Not suitable for children under 36 months. Small parts. Choking hazard.
Retain packaging and instructions since they contain important information. MADE IN CHINA.

www.JAKKS.com JAKKS Pacific® Nasdaq:JAKK MARVEL

© MARVEL

BATTERY INSTALLATION

ADULT INSTALLATION REQUIRED
Requires 3 “AAA” (LR03) alkaline batteries
and 1 “9V” (6LR61) alkaline battery.
Batteries not included.
When performance diminishes,
replace with fresh batteries.

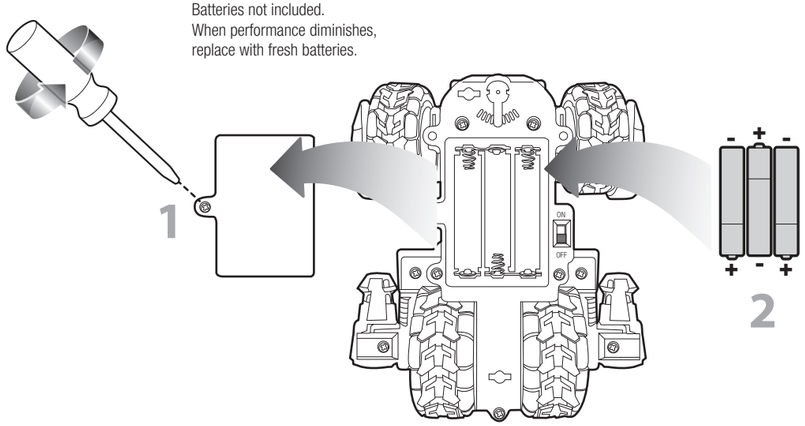

VEHICLE

1. Locate and open BATTERY COVER as shown.
Use a Phillips/cross head screwdriver (not included)
to loosen screw. Screw remains attached to cover.

2. Install 3 - 1.5V AAA (LR03) ALKALINE BATTERIES in the
orientation shown.

3. Replace BATTERY COVER and tighten screw.

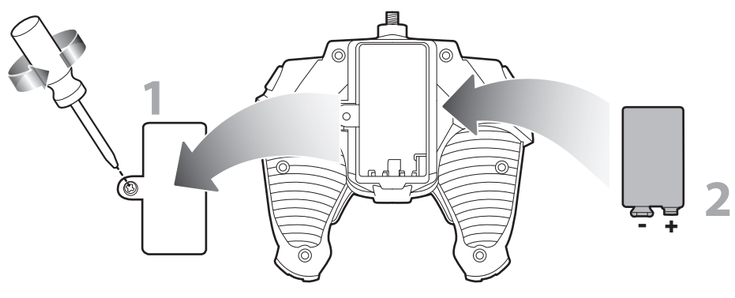

REMOTE CONTROL

1. Locate and open BATTERY COVER as shown.
Use a Phillips/cross head screwdriver (not included)
to loosen screw. Screw remains attached to cover.

2. Install 1 - 9V (6LR61) ALKALINE BATTERY in the
orientation shown.

3. Replace BATTERY COVER and tighten screw.

BATTERY SAFETY INFORMATION

⚠ WARNING! Battery acid leakage can cause personal injury and cause damage to the product and surrounding property. If battery leakage occurs, thoroughly wash any affected skin, making sure to keep battery acid away from eyes, ears, nose and mouth. Immediately wash any clothing or other surface that comes in contact with leaked battery acid. Leaking batteries may make "popping" sounds. Dispose according to Local, State or Federal Battery Laws.

TO AVOID BATTERY PROBLEMS:
NEVER mix old and new batteries or different brands of batteries.
NEVER mix alkaline, standard (carbon-zinc), rechargeable (nickel-cadmium) batteries with this product.
NEVER dispose of batteries in fire, as they may leak and explode.
NEVER use rechargeable batteries.
ALWAYS remove exhausted batteries from toy.
ALWAYS have an adult install batteries consistent with installation instructions.
ONLY use batteries specified by manufacturer.
Batteries are to be inserted with the correct polarity.
The supply terminals are not to be short-circuited.
Non-rechargeable batteries are not to be recharged.

CONTROLS

REMOTE CONTROL

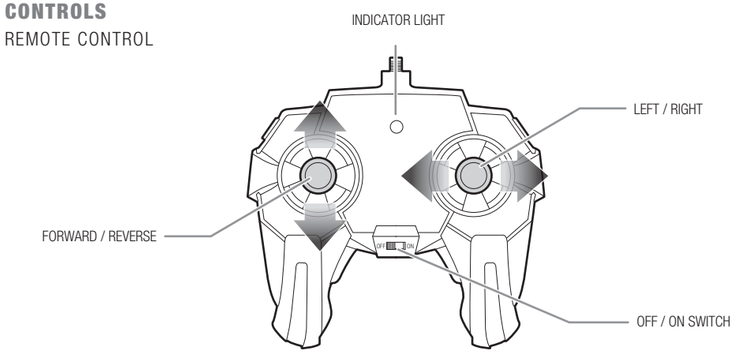

VEHICLE

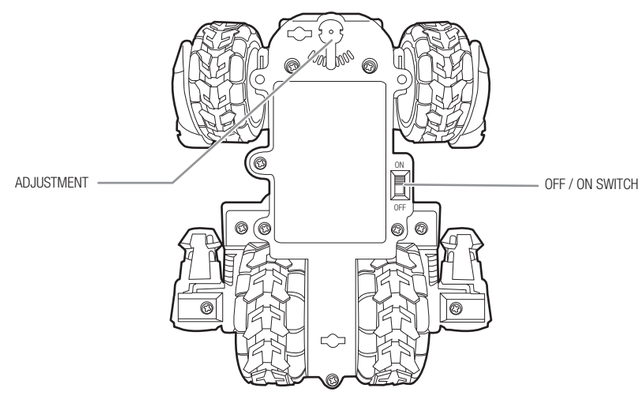

OPERATION

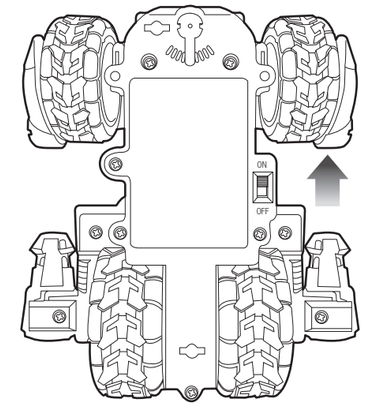

1. VEHICLE: Move the OFF / ON SWITCH to
the ON position.

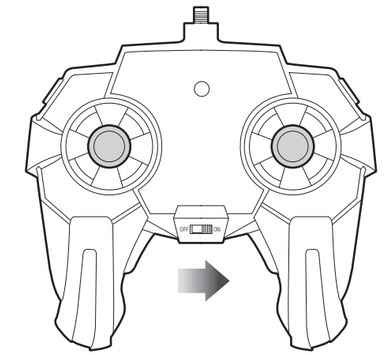

2. REMOTE CONTROL: Move the OFF / ON SWITCH
to the ON position.

3. Place the VEHICLE on ground. Point the
REMOTE CONTROL directly at the VEHICLE.
Use the FORWARD / REVERSE and
LEFT / RIGHT CONTROLS to maneuver the vehicle.

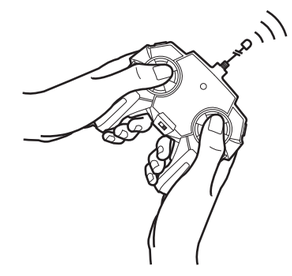

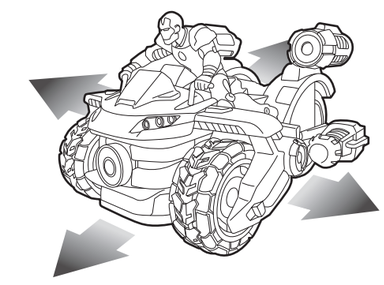

Note: This vehicle is for indoor & outdoor use. Works best
on hard surfaces such as wood, concrete and tile.
Not recommended for use on high-pile carpets or grass.
Never use in water and mud.

IMPORTANT SAFETY INFORMATION

- NEVER drive near traffic, buildings, trees, people or other obstructions.
- NEVER operate during storms or other adverse weather conditions.
- ALWAYS point away from face, eyes, people, animals and property when driving.
- ALWAYS use alkaline batteries only.