TOPMAZ Racing™

NO.: 84191

INSTRUCTION MANUAL

1:14 SCALE

MULTI-PLAYERS

FULL FUNCTION

LIGHTING EFFECT

8+ ages

BURNOUTZ

FULL FUNCTION RADIO CONTROL

Ford Mustang GT4

RTR Ready To Run

6.4V LITHIUM ION 1300mAh

2.4GHz PRO. SYSTEM

Contents

-RC Vehicle (Vehicle) x 1
-RC Transmitter (Transmitter) x 1
-Water container x1
-Drifting wheels x4
-Screwdriver x1
-Instruction Manual x 1
-6.4V Rechargeable Battery Pack x 1
-Charger x 1
-9V Battery x 1

30M / 98FT RANGE

RC Transmitter x 1

RC Vehicle x 1

Water container x1

Screwdriver x1

Drifting wheels x4

BATTERY REQUIREMENTS:

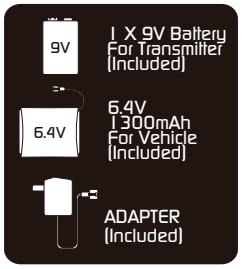

Battery Precaution

1. The 6.4V Lithium Rechargeable Battery Pack must be charged before use by utilizing the battery charger which included
2. Do not overcharge the battery pack. Do not charge for more than 6 hours
3. Do not charge the battery pack if it shows leakage, corrosion, or has loose or exposed wires or other damage
4. Do not cover the battery pack with any sort of materials while charging
5. Do not touch the battery pack when it is hot. Wait until the battery pack cools before installing it in the Vehicle and before recharging
6. Do not dispose of the battery in fire
7. Do not dismantle the battery or charger, and do not cut the battery or charger cables
8. The battery pack will be warm after charging, and hot after use in a vehicle
9. The supply terminals are not to be short-circuited
10. Rechargeable batteries are to be removed from the toy before being charged
11. Rechargeable batteries are only to be charged by adult.
12. Battery replacement must be only made by adults
13. The transformer (charger) is not a toy
14. Charge only type (1300mAh Max.) rechargeable battery packs. Other types of batteries may burst causing injury to persons and damage. This power unit is intended to be correctly orientated in a vertical or floor mount position. This charger is intended to be used for charging 6.4V lithium rechargeable battery pack with capacity 1300mAh Max. It cannot be used for charging non-rechargeable batteries. Regular examination of battery charger for any damage to their cord, plug, enclosure and other parts, and that, in the event of such damage, it must not be used with the charger or battery pack charge until such damage has been repaired. Note that the 9V battery is non-rechargeable and is not to be recharged. Only batteries of the same or equivalent type as recommended are to be used. It will need replacement when transmission is poor.
15. Exhausted batteries are to be removed from the product.

Charging the Rechargeable Battery Pack for the Vehicle:

1. Connect the 6.4V lithium rechargeable battery pack to the battery charger
2. Plug the charger into the standard AC socket
3. The charging time for a full charge is about 3 hours
4. When charging is completed, unplug the charger from the AC socket
5. Disconnect the rechargeable battery pack form the battery charger

Battery Installation

For Vehicle (Fig. 1 and Fig. 2)

1. Switch OFF the power
2. Unscrew the screw on the battery cover
3. Open the battery cover
4. Install 6.4V battery pack with correct polarities (+/-) as shown inside the battery compartment
5. Close the battery cover
6. Tighten the screw on the battery cover

For Transmitter (Fig. 3 and Fig. 4)

1. Unscrew the screw on the battery cover
2. Open the battery cover
3. Install 1 new 9V battery with correct polarity (+/-) as shown inside the battery compartment
4. Close the battery cover
5. Tighten the screw on the battery cover

Vehicle

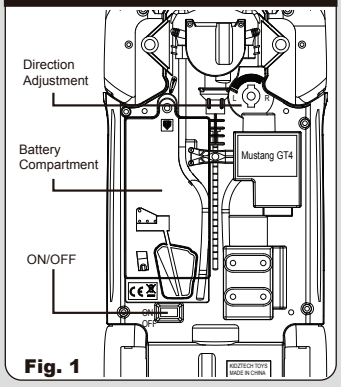

Fig. 1

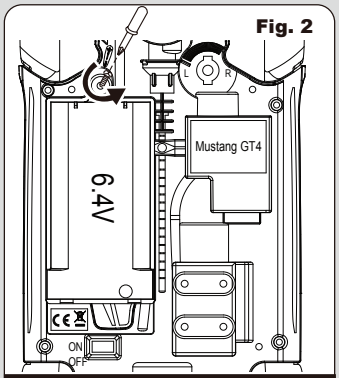

Vehicle - Battery Installation

Transmitter

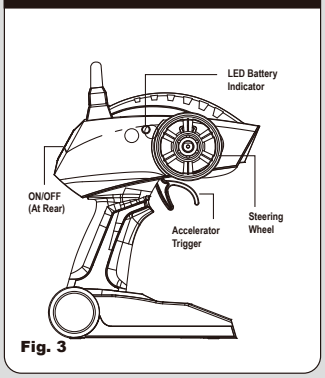

Fig. 3

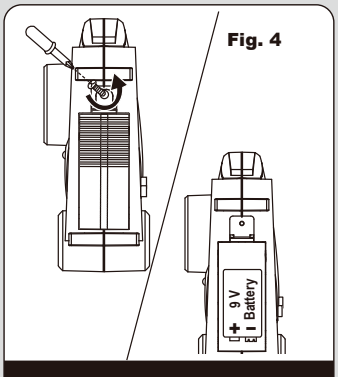

Transmitter - Battery Installation

How To Bind

84191

1. Turn on the Vehicle.
2. Keep pulling the trigger of the Transmitter forward then turn the Transmitter on. Do not release the trigger until the binding process completed.
3. The LED light of the Transmitter will keep flashing for the binding process, which is within 8 seconds. Do not turn off any buttons while in progress, otherwise, the process will be terminated.
4. After the wheels of the Vehicle turn left and right and the LED light of the Transmitter stops flashing, the binding process completed for playing.
5. If it cannot complete within 8 seconds, please turn off both Vehicle and Transmitter and re-start the binding process.
6. When the binding process is done, whenever switching the Vehicle and Transmitter on and off, it searches for the code that it memorized, and will only lock on to the Transmitter signal containing that code.
7. Please turn off both Vehicle and Transmitter and re-start all binding process if changing to another 2.4GHz Transmitter for playing.

How To Play

1. Switch ON the Vehicle and Transmitter.

Vehicle

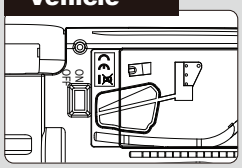

Transmitter

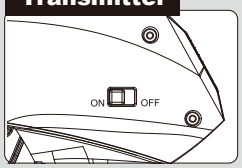

2. Use the Steering Wheel to control the Vehicle turning left or right

Turn Left

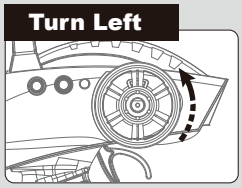

Turn Right

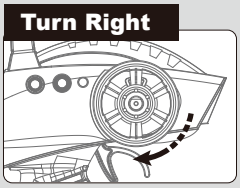

3. Use the Accelerator Trigger to drive the Vehicle Forward, Stop and Backward

Forward

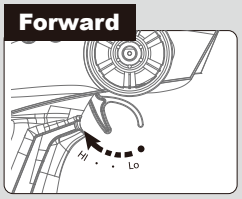

Stop

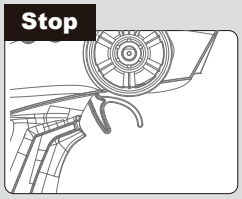

Backward

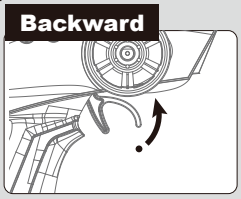

4. If the vehicle does not run in straight line, adjust the Direction Adjustment on the Vehicle chassis
5. Play on smooth surface to have the optimum performance
6. Remember to switch OFF the power of the Vehicle and Transmitter after playing
7. The optimum control range is up to 30m outdoor

How To Fill In Water For Smoking Effect

1. Fill in clear water into water container.

Fig. 5

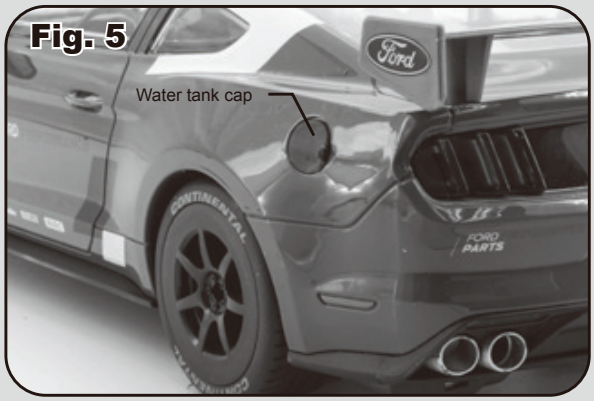

Fig. 6

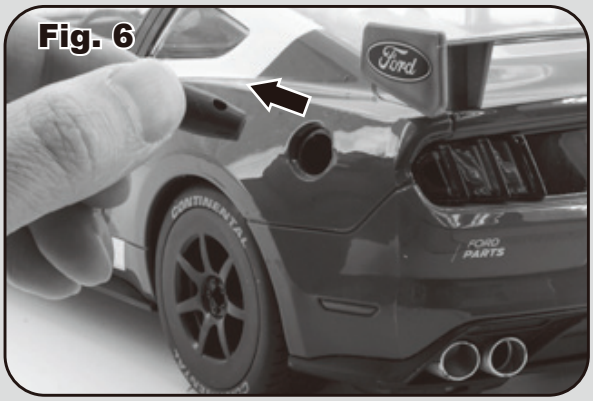

2. Open the cap of water tank on the vehicle. (Fig.5 and Fig.6)

Fig. 7

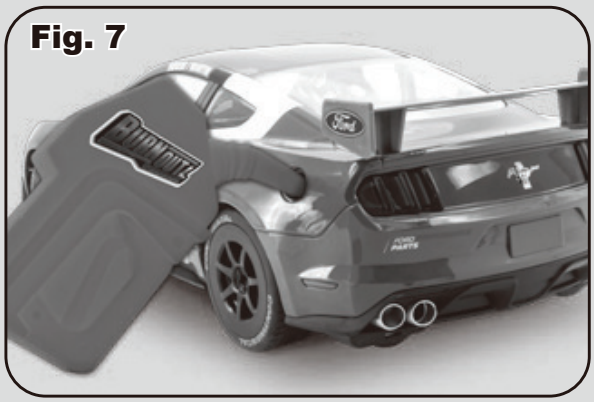

3. Fill in clear water to vehicle by using the provided water container. (Fig.7)

Fig. 8

4. Close the cap firmly. (Fig.8)

How To Change To The Drifting Wheels

84191

1. Unscrew the screws on the wheels of the vehicle.
2. Remove the screws and the wheels from the vehicle.
3. Install the drifting wheels on the vehicle.
4. Tighten the screws on the wheels.

Note: Changing wheels needs to be processed or supervised by the adult.

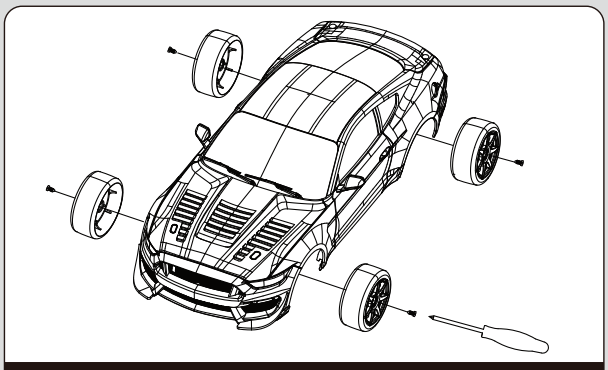

Vehicle - Drifting Wheels Installation

Performance Tips

1. Do not drive on grass, dirt, sand, dusts, carpet or go through water.
2. Do not drive in windy or rainy weather.
3. Avoid direct impact the Vehicle with obstacles.
4. Switch OFF the power when not in use to prevent damage of Vehicle and Transmitter due to leakage of electrolyte from batteries.
5. Remove all batteries from the Vehicle and Transmitter when not in use for long period.
6. Keep fingers, hair and loose clothing away from wheels.
7. The operating range can be affected by a variety of factors
   a) Low Voltage of batteries in Transmitter or Vehicle
   b) Interference from other items that emit radio frequency signals.
8. Outdoor usage is recommended in order to get optimum control range.
9. Recommend to play the vehicle on a clean and smooth surface.
10. Clean the battery compartment to make sure it is free from dust to prevent poor contact of batteries

Cautions

1. Do not attempt to disassemble the Vehicle or Transmitter
2. Make sure the batteries are installed with correct polarities (+/-) as shown inside the battery compartment
3. Remove the package and take out all accessories before giving the Vehicle and Transmitter to child to play

The packaging and instruction manual contain important information. Please keep them for future reference.
Warning! Choking Hazard. Not suitable for children under the age of 3 years due to small parts.
We reserve the right to improve/amend specifications and colors without notice.

FCC label compliance statement:

This device complies with part 15 of the FCC rules. Operation is subject to the following two conditions:
1. This device may not cause harmful interference, and
2. This device must accept any interference received, including interference that may cause undesired operation. Note: This equipment has been tested and found to comply with the limits for a Class B digital device, pursuant to Part 15 of the FCC Rules. These limits are designed to provide reasonable protection against harmful interference in a residential installation. This equipment generates, uses and can radiate radio frequency energy and, if not installed and used in accordance with the instructions, may cause harmful interference to radio communications. However, there is no guarantee that interference will not occur in a particular installation. If this equipment does cause harmful interference to radio or television reception, which can be determined by turning the equipment off and on, the user is encouraged to try to correct the interference by one or more of the following measures:
   - Reorient or relocate the receiving antenna
   - Increase the separation between the equipment and receiver
   - Connect the equipment into an outlet on a circuit different from that to which the receiver is connected
   - Consult the dealer or an experienced radio/TV technician for help

Warning: Changes or modifications to this unit not expressly approved by the party responsible for compliance could void the user's authority to operate the equipment.

RSS-210 Compliance Statement:

This device complies with Industry Canada Licence-exempt RSS-210. Operation is subject to the following two conditions: (1) this device may not cause interference, and (2) this device must accept any interference, including interference that may cause undesired operation of the device.

Under Industry Canada regulations, this radio transmitter may only operate using an antenna of a type and maximum (or lesser) gain approved for the transmitter by Industry Canada,. To reduce potential radio interference to other users, the antenna type and its gain should be so chosen that the equivalent isotropically radiated power (e.i.r.p.) is not more than that necessary for successful communication.

Le présent appareil est conforme aux CNR d'Industrie Canada applicables aux appareils radio exempts de licence. L'exploitation est autorisée aux deux conditions suivantes :
1) l'appareil ne doit pas produire de brouillage;
2) l'utilisateur de l'appareil doit accepter tout brouillage radioélectrique subi, même si le brouillage est susceptible d'en compromettre le fonctionnement.

Declaration of Conformity

The product is in conformity with the requirement of EU Directive 2014/53/EU.

Environmental notes:

The whole product also does not belong to household waste at the end of the product life.
You can return it at collection points for the recycling of electronic and electronical instruments
The symbol on the item, instruction manual, hangtag or packing is showing this clearly.
Materials should be recycled according to their respective markings.
Recycling of old devices or other re-use of materials contained therein represents an important contribution to environmental protection.
Please ask at your local community for the correct collection point.

Disposal of batteries

Batteries should not be disposed of in the household waste. As the consumer you are legally obliged to return batteries containing harmful substances and all other used batteries. You can hand in your old batteries at public collection points in your area or wherever batteries are sold.
You will find these chemical abbreviations along with a crossed-out refuse bin on batteries containing harmful substances:
Pb=Battery contains lead
Cd=Battery contains cadmium
Hg=Battery contains mercury

Ford Official Licensed Product

Ford Trademarks and Trade Dress used under license to KidzTech Toys Manufacturing Ltd.

Conforms to the safety requirements of ASTM F963

www.kidztech.net

KIDZTECH TOYS MANUFACTURING LTD.
Room 1201,12/F, Inter-Continental Plaza,
94 Granville Road, TST East, Hong Kong.
Tel: (852) 27218868 info@kidztech.net
Made in China http://www.kidztech.net

KT-Burnoutz-20181008-EN

84191