TOPMAXX Racing™

INSTRUCTION MANUAL

6.4V LITHIUM ION 1300mAh

8+ age

1:6 SCALE | MULTI-PLAYERS

Designed For Play Indoors / Outdoors

SNOW | DRIVEWAY | GRASS | CARPET

2.4GHz PRO. SYSTEM

YAMAHA

LICENSED PRODUCT

SCAN TO VISIT US

www.kidztech.net

NO.: 84371

SR VIPER SNOWMOBILE RADIO CONTROL

FULL FUNCTION RADIO CONTROL

Contents

- -RC Vehicle ____ x 1
- -2.4GHz RC Transmitter ____ x 1
- -Instruction Manual ____ x 1
- -6.4V Rechargeable Battery Pack ____ x 1
- -Adapter ____ x 1
- -9V Battery ____ x 1
- -Inter-Changeable Ski ____ x 2

·RANGE 35M
2.4GHz RC Transmitter x 1

RC Vehicle x 1 | Inter-Changeable Ski

BATTERY REQUIREMENTS:

- 9V — 1 X 9V Battery For Transmitter (Included)
- 6.4V Lithium — 6.4V Lithium 1300mAh For Vehicle (Included)
- ADAPTER (Included)

Battery Precaution

1. The 6.4V rechargeable battery pack must be charged before use by utilizing the battery charger which included
2. Do not overcharge the battery pack. Do not charge for more than 6 hours
3. Do not charge the battery pack if it shows leakage, corrosion, or has loose or exposed wires or other damage
4. Do not cover the battery pack with any sort of materials while charging
5. Do not touch the battery pack when it is hot. Wait until the battery pack cools before installing it in the Vehicle and before recharging
6. Do not dispose of the battery in fire
7. Do not dismantle the battery or charger, and do not cut the battery or charger cables
8. The battery pack will be warm after charging, and hot after use in a vehicle
9. The supply terminals are not to be short-circuited
10. Rechargeable batteries are to be removed from the toy before being charged
11. Rechargeable batteries for adult charging only
12. Battery replacement must be only made by adults
13. The transformer (charger) is not a toy
14. Charge only type (1300mAh Max.) rechargeable battery packs. Other types of batteries may burst causing injury to persons and damage. This power unit is intended to be correctly orientated in a vertical or floor mount position. This charger is intended to be used for charging 6.4V rechargeable battery pack with capacity 1300mAh Max. It cannot be used for charging non-rechargeable batteries. Regular examination of battery charger for any damage to their cord, plug, enclosure and other parts, and that, in the event of such damage, it must not be used with the charger or battery pack charge until such damage has been repaired. Note that the 9V battery is non-rechargeable and is not to be recharged. Only batteries of the same or equivalent type as recommended are to be used. It will need replacement when transmission is poor.
15. Exhausted batteries are to be removed from the product.

Battery Installation

For Vehicle: (Fig.1 - Fig.5)

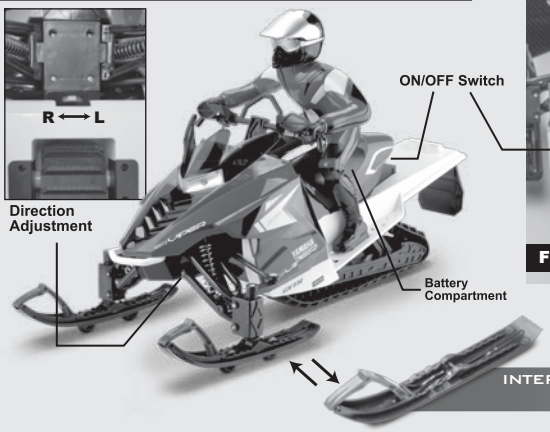

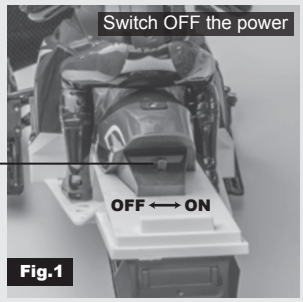

Fig.1

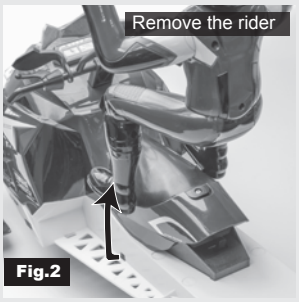

Fig.2

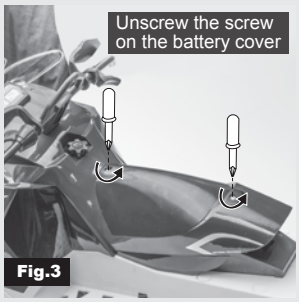

Fig.3

Fig.4

Fig.5

Transmitter

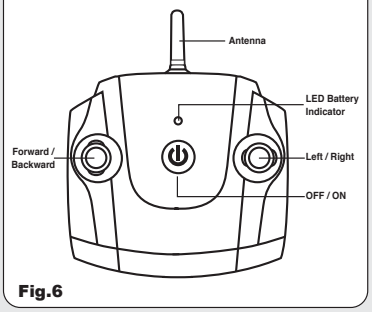

Fig.6

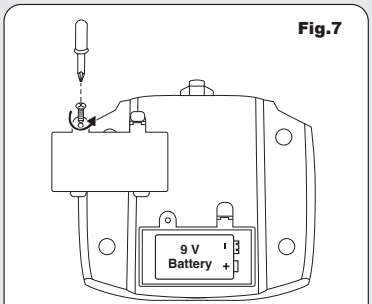

Fig.7

Transmitter - Battery Installation

For Transmitter (Fig.6 and Fig.7)

1. Switch OFF the power
2. Unscrew the screw on the battery cover
3. Open the battery cover
4. Install 1 new 9V battery with correct polarity (+/-) as shown inside the battery compartment
5. Close the battery cover
6. Tighten the screw on the battery cover

Charging the Rechargeable Battery Pack for the Vehicle:

1. Connect the 6.4V rechargeable battery pack to the battery charger
2. Plug the charger into the standard AC socket
3. The charging time for a full charge is about 3 hours
4. When charging is completed, unplug the charger from the AC socket
5. Disconnect the rechargeable battery pack form the battery charger

Start To Play

To Match the signal of the Vehicle and Transmitter

1. Make sure the Vehicle and Transmitter is installed with batteries.
2. Switch ON the Vehicle.
3. Push the forward stick and hold it in forward position, and switch ON the Transmitter.
4. The skis of the Vehicle will turn left and right, to show that the signal matching between the Vehicle and Transmitter is completed.
5. To avoid interference to the signal matching process, please make sure there is no other 2.4GHz device operating in the same area during the process.
6. If the Vehicle is matched with more than one Transmitter, or more than one Vehicles are matched with one Transmitter. Just repeat the matching procedures and make sure only one Vehicle and one Transmitter is switched ON in the signal matching process.

How to Play

1. Switch ON the Vehicle.
2. Use the Forward / Backward joystick (Fig.6) to drive the Vehicle forward and backward.
3. Use the Left / Right joystick (Fig.6) to control the Vehicle turning left or right.
4. If the vehicle does not run in straight line, adjust the Direction Adjustment on the vehicle chassis.
5. Play on smooth surface to have the optimum performance.
6. Remember to switch OFF the power of the Vehicle and Transmitter after playing.
7. The optimum control range is up to 35m outdoor.

Performance Tips

1. Do not drive on dirt, sand, dusts or go through water
2. Do not drive in windy or rainy weather
3. Avoid direct impact the Vehicle with obstacles
4. Switch OFF the power when not in use to prevent damage of Vehicle and Transmitter due to leakage of electrolyte from batteries
5. Remove all batteries from the Vehicle and Transmitter when not in use for long period
6. Keep fingers, hair and loose clothing away from wheels, belt, skis
7. The operating range can be affected by a variety of factors
   a) Low Voltage of batteries in Transmitter or Vehicle
   b) Interference from other items that emit radio frequency signals
8. Outdoor usage is recommended in order to get optimum control range
9. Recommend to play the vehicle on a clean and smooth surface
10. Clean the battery compartment to make sure it is free from dust to prevent poor contact of batteries

Cautions

1. Do not attempt to disassemble the Vehicle or Transmitter
2. Make sure the batteries are installed with correct polarities (+/-) as shown inside the battery compartment
3. Remove the package and take out all accessories before giving the Vehicle and Transmitter to child to play

The packaging and instruction manual contain important information. Please keep them for future reference.
Warning! Choking Hazard. Not suitable for children under the age of 3 years due to small parts.
We reserve the right to improve/amend specifications and colors without notice.

FCC label compliance statement:

This device complies with part 15 of the FCC rules. Operation is subject to the following two conditions:

1. This device may not cause harmful interference, and
2. This device must accept any interference received, including interference that may cause undesired operation. Note: This equipment has been tested and found to comply with the limits for a Class B digital device, pursuant to Part 15 of the FCC Rules. These limits are designed to provide reasonable protection against harmful interference in a residential installation. This equipment generates, uses and can radiate radio frequency energy and, if not installed and used in accordance with the instructions, may cause harmful interference to radio communications. However, there is no guarantee that interference will not occur in a particular installation. If this equipment does cause harmful interference to radio or television reception, which can be determined by turning the equipment off and on, the user is encouraged to try to correct the interference by one or more of the following measures:
   - Reorient or relocate the receiving antenna
   - Increase the separation between the equipment and receiver
   - Connect the equipment into an outlet on a circuit different from that to which the receiver is connected
   - Consult the dealer or an experienced radio/TV technician for help

Warning: Changes or modifications to this unit not expressly approved by the party responsible for compliance could void the user's authority to operate the equipment.

RSS 210 Compliance Statement:

This device complies with Industry Canada Licence-exempt RSS 210. Operation is subject to the following two conditions: (1) this device may not cause interference, and (2) this device must accept any interference, including interference that may cause undesired operation of the device.

Declaration of Conformity

The product is in conformity with the requirement of EU Directive 2014/53/EU

Max. output power < 10dBm
Frequency band
2405-2475MHz

Environmental notes:

The whole product also does not belong to household waste at the end of the product life.
You can return it at collection points for the recycling of electronic and electronical instruments
The symbol on the item, instruction manual, hangtag or packing is showing this clearly.
Materials should be recycled according to their respective markings.
Recycling of old devices or other re-use of materials contained therein represents an important contribution to environmental protection.
Please ask at your local community for the correct collection point.

Disposal of batteries

Batteries should not be disposed of in the household waste. As the consumer you are legally obliged to return batteries containing harmful substances and all other used batteries. You can hand in your old batteries at public collection points in your area or wherever batteries are sold. You will find these chemical abbreviations along with a crossed-out refuse bin on batteries containing harmful substances:
Pb=Battery contains lead
Cd=Battery contains cadmium
Hg=Battery contains mercury

YAMAHA
LICENSED PRODUCT
Yamaha, The Tuning Fork Mark, SRViper, and the likeness thereof including the graphics and color of Yamaha Team Blue are Trademarks of Yamaha Motor used under License.
Yamaha-motor.com
Manufactured & Distributed by KIDZTECH TOYS MANUFACTURING LTD.
All Rights Reserved
Made in China

Conforms to the safety requirements of ASTM F963

A.W.E.CO SRL (Kidztech Toys)
Via C. Scarpa 140, 36100 Vicenza, Italy

Shantou Chenghai JinJun Toys Co. Ltd.
Yongxin Industry Zone, Lianshang, Chenghai, Shantou, China

KIDZTECH TOYS MANUFACTURING LTD.
Room 1201,12/F, Inter-Continental Plaza,
94 Granville Road, TST East, Hong Kong.
Tel: (852) 27218868 info@kidztech.net
Made in China http://www.kidztech.net

KT15/06/15-01GB