TOPMAZ Racing™

JET SKI® Kawasaki ULTRA® 310R

No.#84514 8+

2.4 GHz RC 1:10

Contents
RC Vehicle x 1
RC Transmitter x 1
Instruction Manual x 1
6.4V Rechargeable Battery Pack x 1
USB Cable Adaptor x 1
1.5V AAA Battery x 2

Battery Requirement
1. Vehicle: 1 x 6.4V Rechargeable Battery Pack
2. Transmitter: 2 x 1.5V AAA Battery

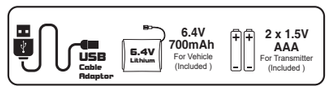

Battery Precaution
1. The 6.4V rechargeable battery pack must be charged before use by utilizing the USB cable adaptor which included
2. Do not overcharge the battery pack. Do not charge for more than 6 hours
3. Do not charge the battery pack if it shows leakage, corrosion, or has loose or exposed wires or other damage
4. Do not cover the battery pack with any sort of materials while charging
5. Do not touch the battery pack when it is hot. Wait until the battery pack cools before installing it in the Vehicle and before recharging
6. Do not dispose of the battery in fire
7. Do not dismantle the battery or charger, and do not cut the battery or charger cables
8. The battery pack will be warm after charging, and hot after use in vehicle
9. The supply terminals are not to be short-circuited
10. Rechargeable batteries are to be removed from the toy before being charged
11. Rechargeable batteries are only to charged by adult
12. Battery replacement must be only made by adults
13. The USB cable adaptor is not a toy.
14. Charge only type (700mAh Max.) rechargeable battery packs. Other types of batteries may burst causing injury to persons and damage. This power unit is intended to be correctly orientated in a vertical or floor mount position. This charger is intended to be used for charging 6.4V rechargeable battery pack with capacity 700mAh Max. It cannot be used for charging non-rechargeable batteries. Regular examination of USB cable adaptor for any damage to their cord, plug, exclosure and other parts, and that, in the event of such damage, it must not be used with the USB cable adaptor or battery pack charge until such damage has been repaired. Note that the AAA batteries are non-rechargeable and is not to be recharged. Only batteries of the same or equivalent type as recommended are to be used. It will need replacement when transmission is poor.
15. Exhausted batteries are to be removed from the product.
16. Do not mix old and new batteries or different type of batteries.

Charging the Rechargeable Battery Pack for the Vehicle:
1. Connect the 6.4V rechargeable battery pack to the USB cable adaptor.
2. Recommend use Computer connect USB cable adaptor to charge the battery. If use adaptor connect USB cable adaptor to charger battery, the output limit cannot exceed 6.4V.
3. The charging time for a full charge is about 2 hours. Full charge battery usage Max. 15 Mins.
4. When charging is completed, unplug the USB cable adaptor.
5. Disconnect the rechargeable battery pack from the USB cable adaptor.

To Match the signal of the Vehicle and Transmitter
1. Make sure the Vehicle and Transmitter is installed with batteries.
2. Put the Vehichle on the water, the Vehicle signal light Ⓝ will flash.
3. Press the Signal Match Button for 4 second then the Transmitter signal light Ⓟ will flash for 6-7 second. When the Vehicle signal light Ⓝ keep on will show the matching between the Vehicle and Transmitter is completed.
4. To avoid interference to the signal matching process, please make sure there is no other 2.4GHz device operating in the same area during the process.
5. If the Vehicle is matched with more than one Transmitter, or more than one Vehicles are matched with one Transmitter. Just repeat the matching procedures

Battery Installation
For Vehicle (Fig. 1)

Vehicle

Remove the Battery Cover Ⓐ Ⓑ Ⓒ Ⓓ Ⓔ

1. Turn Ⓐ - Ⓔ to unlock the locking tabs and remove the top of the Jet Ski to expose the battery cover.

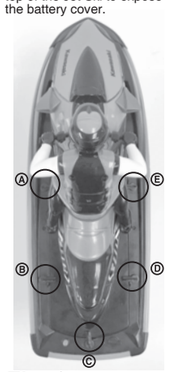

Remove the Battery Cover Ⓕ Ⓖ Ⓗ Ⓘ Ⓙ

2. Turn Ⓕ - Ⓘ unlock the locking tabs and unscrew Ⓙ the screw then open the battery cover to expose the battery.

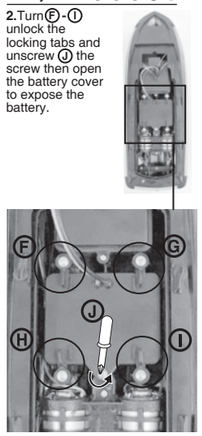

Connect with Battery Ⓚ Ⓜ

3. Plug Ⓚ battery USB with Ⓜ 6.4V Lithium battery together, store the Lithium battery inside the battery cover, tighten the screw and lock the locking tabs on the battery cover.
4. Install back the top of the Jet Ski, lock the locking tabs.

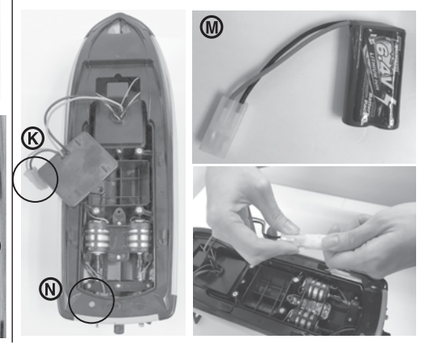

Fig. 1

The packaging and instruction manual contain important information. Please keep them for future reference.
Warning! Choking Hazard. Not suitable for children under the age of 3 years due to small parts.
We reserve the right to improve/amend specifications and colors without notice.
Warning! The Antenna of vehicle and/or transmitter is/are not to be inserted into socket outlets.

For Transmitter (Fig. 2 and Fig. 3)
1. Unscrew the screw on the battery cover
2. Open the battery cover
3. Install 2 x 1.5V "AAA" batteries with correct polarity (+/-) as shown inside the battery compartment
4. Close the battery cover
5. Tighten the screw on the battery cover

2.4 GHz Transmitter

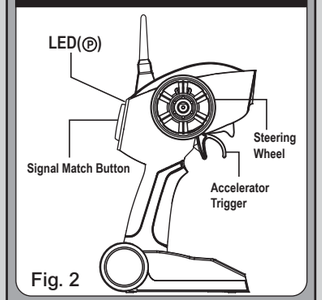

Fig. 2

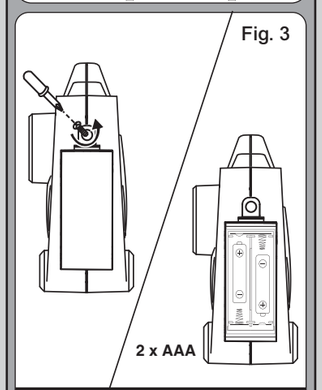

Fig. 3

Transmitter - Battery Installation

How To Play
1. Put the Vehichle on the water.
2. Use the Trigger to drive the Vehicle Forward and Stop.

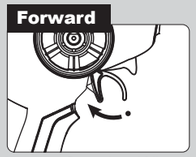

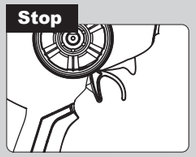

3. Use the Steering Wheel to control the Vehicle turning left or right.

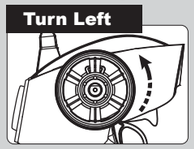

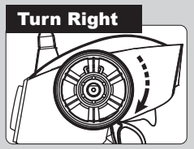

Direction Adjustment

4. If the vehicle does not run in straight line, adjust the Direction Adjustment on the Vehicle chassis.
5. Play on flatten water to have the optimum performance.
6. Remember to take out the batteries of the Vehicle and Transmitter after playing.
7. The optimum control range is up to 30m (98ft) outdoor.

Performance Tips
1. Do not operate the Vehicle where there is debris or plants in the water, as they could cause damage to the propelleror the hull.
2. Never play outdoors during extreme weather, such as thunderstorms and strong current or wind.
3. Avoid hard crashes.
4. Take out all the batteries when not in use to prevent damage of Vehicle and Transmitter due to leakage of electrolyte from batteries.
5. Remove all batteries from the Vehicle and Transmitter when not in use for long period.
6. Never touch the propeller while it is turning.
7. The operating range can be affected by a variety of factors.
   a) Low Voltage of batteries in Transmitter or Vehicle.
   b) Interference from other items that emit radio frequency signals.
8. Always get the Vehicle out of the water before the battery power fails
9. Never give the Vehicle or Tranmitter to any child under 8 years of age, as it contains small parts.
10. Never use chemicals including benzene, alcohol, or thinner to clean the boat. When not in use, remove batteries from compartments. (Vehicle and Transmitter)
11. Remove all the water out of the vehicle after place in water everytime.
12. LED on the boat will start to blink when the battery is getting low.

Cautions
1. Do not attempt to disassemble the Vehicle or Transmitter.
2. Make sure the batteries are installed with correct polarities (+/-) as shown inside the battery compartment.
3. Remove the package and take out all accessories before giving the Vehicle and Transmitter to child to play.
4. The toys is to be operated in water only when fully assembled in accordance with the instructions.

FCC label compliance statement:
This device complies with part 15 of the FCC rules. Operation is subject to the following two conditions:
1. This device may not cause harmful interference, and
2. This device must accept any interference received, including interference that may cause undesired operation. Note: This equipment has been tested and found to comply with the limits for a Class B digital device, pursuant to Part 15 of the FCC Rules. These limits are designed to provide reasonable protection against harmful interference in a residential installation. This equipment generates, uses and can radiate radio frequency energy and, if not installed and used in accordance with the instructions, may cause harmful interference to radio communications. However, there is no guarantee that interference will not occur in a particular installation. If this equipment does cause harmful interference to radio or television reception, which can be determined by turning the equipment off and on, the user is encouraged to try to correct the interference by one or more of the following measures:
   - Reorient or relocate the receiving antenna
   - Increase the separation between the equipment and receiver
   - Connect the equipment into an outlet on a circuit different from that to which the receiver is connected
   - Consult the dealer or an experienced radio/TV technician for help

Warning: Changes or modifications to this unit not expressly approved by the party responsible for compliance could void the user's authority to operate the equipment.

RSS-210 Compliance Statement:
This device contains licence-exempt transmitter(s)/receiver(s) that comply with Innovation, Science and Economic Development Canada's licence-exempt RSS(s).
Operation is subject to the following two conditions:
(1) This device may not cause interference.
(2) This device must accept any interference, including interference that may cause undesired operation of the device.

Declaration of Conformity
The product is in conformity with the requirement of EU Directive 2014/53/EU.

Environmental notes:
The whole product also does not belong to household waste at the end of the product life.
You can return it at collection points for the recycling of electronic and electronical instruments
The symbol on the item, instruction manual, hangtag or packing is showing this clearly.
Materials should be recycled according to their respective markings.
Recycling of old devices or other re-use of materials contained therein represents an important contribution to environmental protection.
Please ask at your local community for the correct collection point.

Disposal of batteries
Batteries should not be disposed of in the household waste. As the consumer you are legally obliged to return batteries containing harmful substances and all other used batteries. You can hand in your old batteries at public collection points in your area or wherever batteries are sold.
You will find these chemical abbreviations along with a crossed-out refuse bin on batteries containing harmful substances:
Pb=Battery contains lead
Cd=Battery contains cadmium
Hg=Battery contains mercury

Frequency band : 2405 - 2475 MHz
Maximum radio frequency power transmitted : <0 dBm

Kawasaki OFFICIAL LICENSED PRODUCT
87-22612-38300

Kawasaki GENUINE ACCESSORIES Accessories

Kawasaki & JET SKI® ULTRA®310R are trademarks licensed by Kawasaki Motors Corp., U.S.A., which does not manufacture or distribute this product.
Officially Licensed Product by Kawasaki Motors Europe N.V.
All rights reserved 2017.
Kawasaki & JET SKI® ULTRA®310R are trademarks of Kawasaki Motors Europe N.V.

KIDZTECH TOYS MANUFACTURING LTD.
Room 802, 8/F, Inter-Continental Plaza,
94 Granville Road, TST East, Hong Kong.
Tel: (852) 27218868 info@kidztech.net
Made in China
http://www.kidztechtoys.com

Conforms to the safety requirements of ASTM F963

EN