TOPMAZ Racing™

BIGFOOT®

6+ age | 1:26 SCALE | Working Suspensions

Official Licensed Product | OFFICIAL LICENSED PRODUCT | SHELBY F-150 | GM OFFICIAL LICENSED PRODUCT | CHEVROLET | Z71 SILVERADO

85025/85026

Contents
RC Vehicle (Vehicle) x 1
RC Transmitter (Transmitter) x 1
Antenna for RC Transmitter x 1
Instruction Manual x 1

Battery Requirement
1. Vehicle: 4.8V Ni-MH 500mAh
2. Transmitter: 1 x 9V battery

4.8V Ni-MH
500mAh
For Vehicle
(Included)

1 x 9V
For Transmitter
(Included)

Battery Precaution
1. Alkaline batteries are recommended to be used
2. Only batteries of the same or equivalent type as recommended are to be used
3. Do not mix alkaline, standard or rechargeable batteries
4. Do not mix old and new batteries or different type of batteries
5. Non-rechargeable batteries are not to be charged
6. If rechargeable batteries are to be used, they are only to be charged under adult supervision
7. Rechargeable batteries are to be removed from the product before they are charged
8. Be sure to insert batteries with correct polarities and always follow the battery manufacturer's instructions
9. Remove all batteries from the Vehicle and Transmitter when not in use
10. Exhausted batteries are to be removed from the product
11. The supply terminals are not to be short-circuited
12. Dispose of batteries properly. Do not dispose the batteries in fire - it may cause them to explode or leak causing injury or damage
13. Battery installation and removal must only be done by adult

Battery and Antenna Installation

For Vehicle (Fig. 1 and Fig. 2)
1. Switch OFF the power
2. Unscrew the screw and lock on the battery cover
3. Push the battery cover downward
4. Open the battery cover
5. Install 4.8V Ni-MH batteries with correct polarities (+/-) as shown inside the battery compartment
6. Close the battery cover
7. Push the battery cover upward to lock it
8. Tighten the screwn and lock on the battery cover

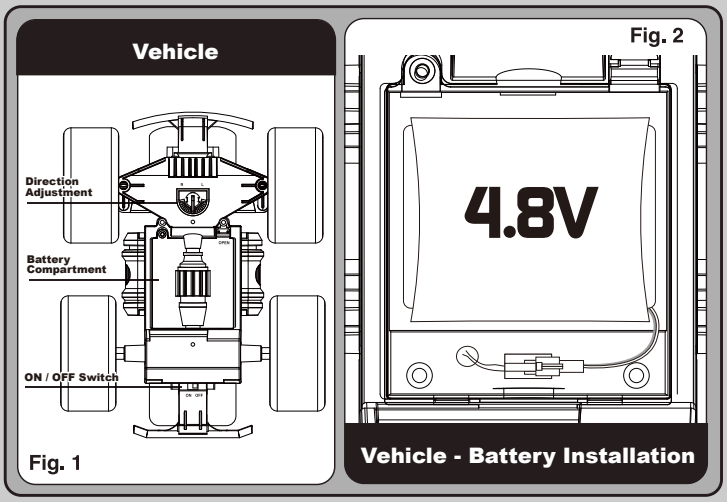

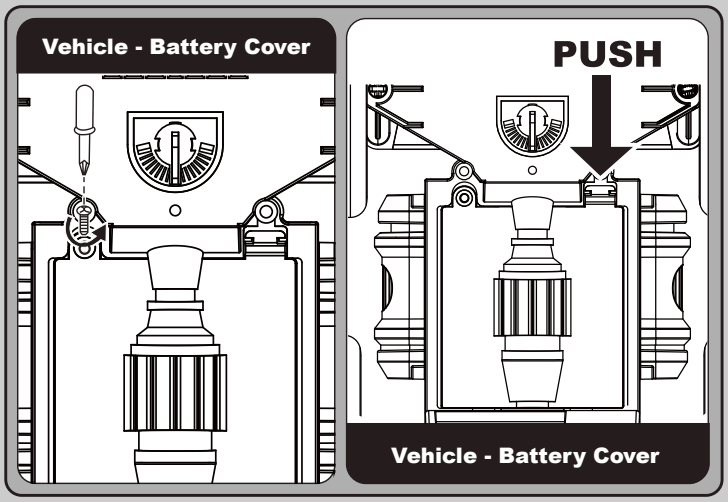

For Transmitter (Fig. 3 and Fig. 4)
1. Switch OFF the power
2. Unscrew the screw on the battery cover
3. Open the battery cover
4. Install 1 new 9V battery with correct polarities (+/-) as shown inside the battery compartment
5. Close the battery cover
6. Tighten the screw on the battery cover
7. Insert the antenna into the top of Transmitter, tighten it by rotating clockwise (viewing from top of Transmitter)

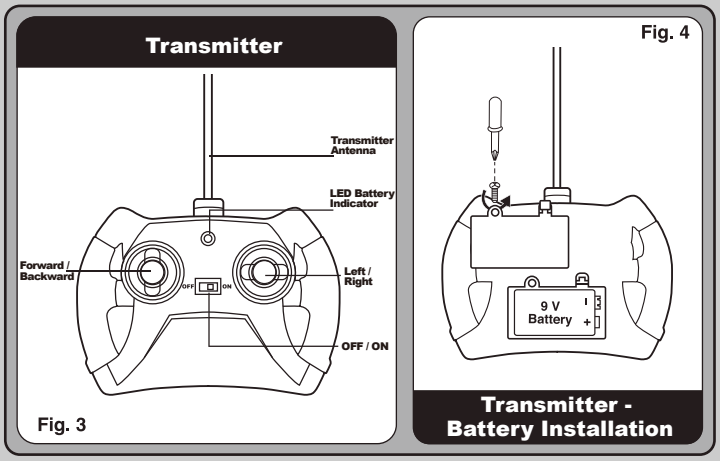

How to Play
1. Switch ON the Vehicle.
2. Use the Forward / Backward joystick (Fig.3) to drive the Vehicle forward and backward.
3. Use the Left / Right joystick (Fig.3) to control the Vehicle turning left or right.
4. If the vehicle does not run in straight line, adjust the direction adjustment on the vehicle chassis (Fig. 1).
5. Play on smooth surface to have the optimum performance.
6. Remember to switch OFF the power of the Vehicle and Transmitter after playing.
7. The optimum control range is up to 15m(49ft) outdoor.

Performance Tips
1. Do not drive on grass, dirt, sand, dusts, carpet or go through water.
2. Do not drive in windy or rainy weather.
3. Avoid direct impact the Vehicle with obstacles.
4. Switch OFF the power when not in use to prevent damage of Vehicle and Transmitter due to leakage of electrolyte from batteries.
5. Remove all batteries from the Vehicle and Transmitter when not in use for long period.
6. Keep fingers, hair and loose clothing away from wheels.
7. The operating range can be affected by a variety of factors.
   a) Low Voltage of batteries in Transmitter or Vehicle.
   b) Interference from other items that emit radio frequency signals.
8. Outdoor usage is recommended in order to get optimum control range.
9. Recommend to play the vehicle on a clean and smooth surface.
10. Clean the battery compartment to make sure it is free from dust to prevent poor contact of batteries.

Cautions
1. Do not attempt to disassemble the Vehicle or Transmitter.
2. Do not operate the Vehicle with same frequency with other player(s) in same location that will interfere and make the Vehicle out of control.
3. Make sure the batteries are installed with correct polarities (+/-) as shown inside the battery compartment.
4. Remove the package and take out all accessories before giving the Vehicle and Transmitter to child to play.

FCC label compliance statement:
This device complies with part 15 of the FCC rules. Operation is subject to the following two conditions:
1. This device may not cause harmful interference, and
2. This device must accept any interference received, including interference that may cause undesired operation. Note: This equipment has been tested and found to comply with the limits for a Class B digital device, pursuant to Part 15 of the FCC Rules. These limits are designed to provide reasonable protection against harmful interference in a residential installation. This equipment generates, uses and can radiate radio frequency energy and, if not installed and used in accordance with the instructions, may cause harmful interference to radio communications. However, there is no guarantee that interference will not occur in a particular installation. If this equipment does cause harmful interference to radio or television reception, which can be determined by turning the equipment off and on, the user is encouraged to try to correct the interference by one or more of the following measures:
   - Reorient or relocate the receiving antenna
   - Increase the separation between the equipment and receiver
   - Connect the equipment into an outlet on a circuit different from that to which the receiver is connected
   - Consult the dealer or an experienced radio/TV technician for help

Warning: Changes or modifications to this unit not expressly approved by the party responsible for compliance could void the user's authority to operate the equipment.

RSS-310 Compliance Statement:
This device complies with Industry Canada Licence-exempt RSS-310. Operation is subject to the following two conditions: (1) this device may not cause interference, and (2) this device must accept any interference, including interference that may cause undesired operation of the device.

Declaration of Conformity
The product is in conformity with the requirement of EU Directive 2014/53/EU

Environmental notes:
The whole product also does not belong to household waste at the end of the product life.
You can return it at collection points for the recycling of electronic and electronical instruments
The symbol on the item, instruction manual, hangtag or packing is showing this clearly.
Materials should be recycled according to their respective markings.
Recycling of old devices or other re-use of materials contained therein represents an important contribution to environmental protection.
Please ask at your local community for the correct collection point.

Disposal of batteries
Batteries should not be disposed of in the household waste. As the consumer you are legally obliged to return batteries containing harmful substances and all other used batteries. You can hand in your old batteries at public collection points in your area or wherever batteries are sold.
You will find these chemical abbreviations along with a crossed-out refuse bin on batteries containing harmful substances:
Pb=Battery contains lead
Cd=Battery contains cadmium
Hg=Battery contains mercury

The packaging and instruction manual contain important information.
Please keep them for future reference.
Warning! Choking Hazard. Not suitable for children under the age of 3 years due to small parts.
We reserve the right to improve/amend specifications and colors without notice.
Warning! The Antenna of vehicle and/or transmitter is/are not to be inserted into socket outlets.

WARNING:
CHOKING HAZARD - Small parts
Not for children under 3 years

Frequency band : 26.957 - 27.283 MHz
Maximum radio frequency power transmitted : <0 dBm

Frequency band : 40.66 - 40.70 MHz
Maximum radio frequency power transmitted : <0 dBm

GM OFFICIAL LICENSED PRODUCT
General Motors Trademarks Used Under License To Kidztech Toys Manufacturing Ltd.

Ford Official Licensed Product
Ford Motor Company Trademarks and Trade Dress used under license to KidzTech Toys Manufacturing Ltd.

OFFICIAL LICENSED PRODUCT
SHELBY® and F-150 ARE REGISTERED TRADEMARKS OF CARROLL SHELBY AND CARROLL SHELBY LICENSING, INC. (SHELBY).

BIGFOOT®
"BIGFOOT"® is a registered trademark of BIGFOOT 4X4, Inc., 2286 Rose Ln., Pacific, MO, 63069 USA, Bigfoot4x4.com.
© 2019 BIGFOOT 4X4, Inc. All rights reserved.
Firestone is a trademark of Bridgestone Brands, LLC, and is used with permission.

CHEVROLET®
2019 CHEVROLET USED UNDER LICENSE

KIDZTECH TOYS MANUFACTURING LTD.
Room 802, 8/F., Inter-Continental Plaza,
94 Granville Road, TST East, Hong Kong.
Tel: (852) 27218868 info@kidztech.net
Made in China http://www.kidztech.net

US OFFICE
1540 Forest Avenue,
River Forest,
IL 60305, USA

www.kidztech.net

Conforms to the safety requirements of ASTM F963