Corometrics® Model 340

OPERATOR'S MANUAL

MANUAL P/N 2006899-001 REV. A

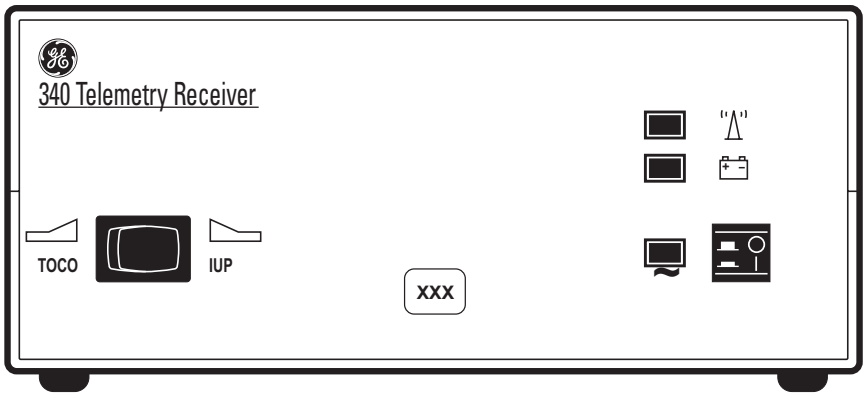

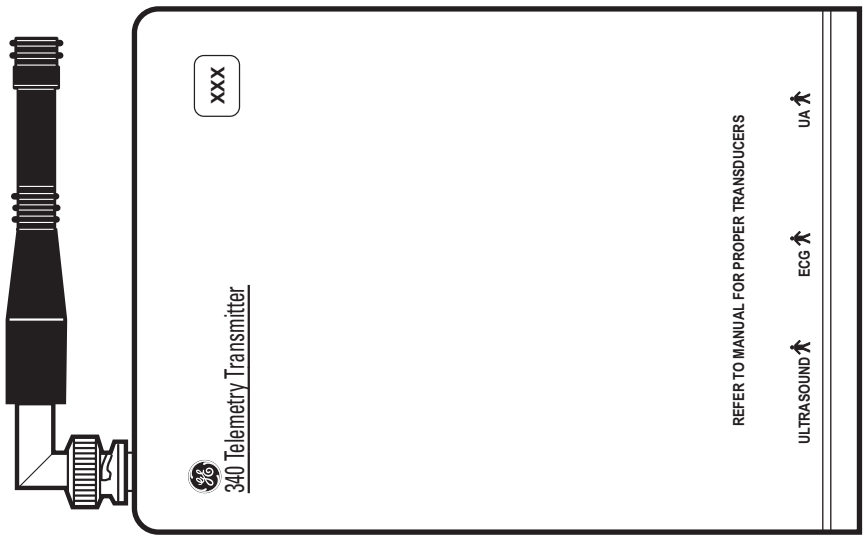

GE Medical Systems
Information Technologies

gemedicalsystems.com

Corometrics® Model 340

OPERATOR'S MANUAL

MANUAL P/N 2006899-001 REV. A

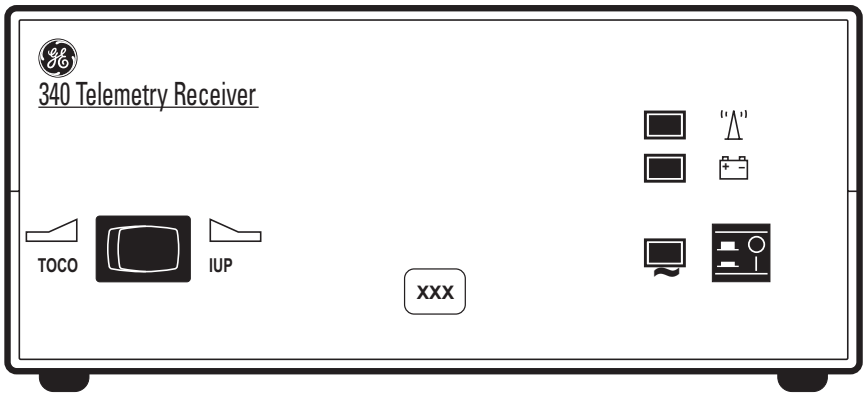

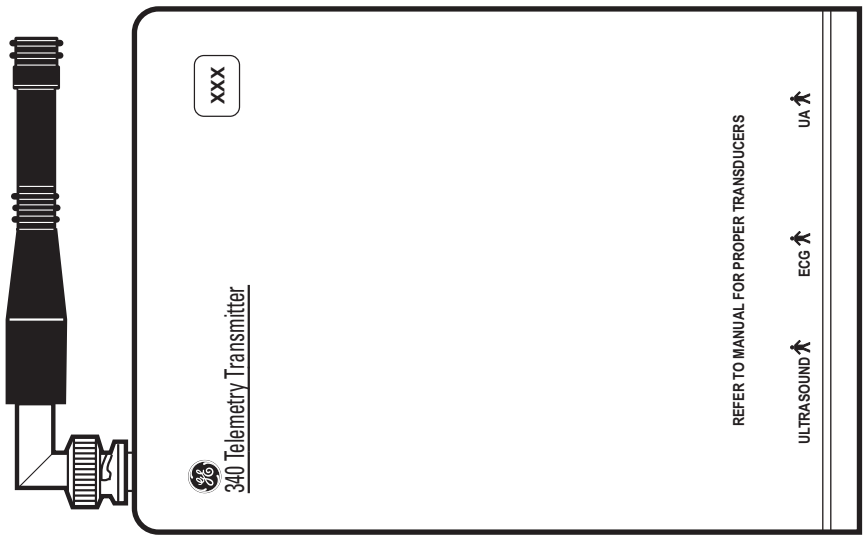

GE Medical Systems
Information Technologies

gemedicalsystems.com

GUARANTEE

All equipment sold by GE Medical Systems *Information Technologies* is fully guaranteed as to materials and workmanship for a period of 1 year. *Information Technologies* reserves the right to perform guarantee service operations in its own factory, at an authorized repair station, or in the customer's installation.

Our obligation under this guarantee is limited to repairing, or, at our option, replacing any defective parts of our equipment, except fuses or batteries, without charge, if such defects occur in normal service.

Claims for damage in shipment should be filed promptly with the transportation company. All correspondence covering the instrument should specify the model and serial numbers.

GE MEDICAL SYSTEMS *Information Technologies*
A GE Medical Systems Company

World Headquarters
8200 West Tower Avenue
Milwaukee, WI 53223 USA
Tel: +414.355.5000
800.558.5120 (US only)
Fax: +414.355.3790
Internet: www.gemedicalsystems.com

Europe / Middle East / Africa
Postfach 60 02 65
D-79032 Freiburg Germany
Tel: +49.761.45.43.0
Fax: +49.761.45.43.233

Asia
11th Floor, The Lee Gardens
33 Hysan Avenue
Causeway Bay Hong Kong
Tel: +852.2100.6300
Fax: +852.2100.6292

Revision A: 04-01

GE Medical Systems *Information Technologies* will make available on request such circuit diagrams, component diagrams, component parts lists, descriptions, calibration instructions, or other information which will assist the users or appropriately qualified technical personnel to repair those parts of the equipment which are classified by *Information Technologies* as repairable. Refer to the service manual for further information.

⚠ **CAUTION:** In the United States of America, Federal Law restricts this device to sale by or on the order of a physician.

Corometrics and *Marquette* are registered trademarks of GE Medical Systems *Information Technologies*. *GE* is a registered trademark of General Electric Company. All other product and brand names are trademarks or registered trademarks of their respective companies. ©2001 GE Medical Systems *Information Technologies*. All rights reserved. No part of this manual may be reproduced without the permission of GE Medical Systems *Information Technologies*.

Contents

Figures v

Tables vii

Preface **Overview of Telemetry Systems** ix

About Your System x
Model 340 Original Release x
Model 340 Plus x
Model 340M x

Identifying Your System xi
Identifying Model 340 Original Release and Model 340 Plus Telemetry Systems . . xi
Identifying a Model 340M Telemetry System xii

1 **Safety** 1-1

General Information 1-2
General Use 1-2
Responsibility of the Manufacturer 1-2

Definitions of Terminology 1-3

Equipment Safety Information 1-4
Warnings 1-4
Cautions 1-7

Equipment Symbols 1-8

FCC Information 1-9
FCC Rules Compliance 1-9
FCC RF Exposure Compliance 1-9
FCC Service Information 1-9
Wireless Medical Telemetry Service 1-10

2 **Introduction 2-1**

Product Summary 2-2

Product Features 2-3

3 **Controls, Indicators, and Connectors 3-1**

Receiver 3-2
Receiver Front Panel 3-2
Receiver Rear Panel 3-4

Transmitter 3-6
Transmitter Bottom Panel 3-6
Transmitter Top Panel 3-8
Transmitter Rear Panel Battery Compartment 3-10

4 **Setup Procedures 4-1**

Connecting the Receiver and Monitor 4-2
Models 115, 116, 118, 145, 150, 151, and 155 4-2
120 and 170 Series 4-5

Setting Up the Transmitter 4-7
Installing Batteries 4-7
Attaching the Antenna 4-9
Attaching the Carrying Strap 4-9

Performing a Functional Checkout 4-10
Initial Conditions 4-10
Testing the Radio Frequency 4-10
Testing the Ultrasound Functions 4-11
Testing the ECG Functions 4-13
Testing the UA Functions 4-14
Testing the Remote Event Marker Function 4-16
Testing the Environment 4-16

5 Monitoring via Telemetry 5-1

Suggestions for Ambulatory Monitoring 5-2

Monitoring Reminders 5-3
General 5-3
Ultrasound 5-3
FECG 5-3
Tocotransducer 5-4
IUP 5-4

6 Maintenance 6-1

General Cleaning Precautions 6-2

Cleaning the Transmitter and Receiver 6-3

7 Troubleshooting 7-1

Problem Chart 7-2

8 Supplies and Accessories 8-1

General 8-2

Paper 8-3

Ultrasound 8-4

FECG 8-5

Tocotransducer 8-6

IUPC 8-7

MECG 8-8

9 Technical Specifications 9-1

Transmitter 9-2

Receiver 9-4

For your notes

Figures

Figure Preface-1.
Model 340 or Model 340 Plus REF Number xi

Figure Preface-2.
Model 340M REF Number xii

Figure 5-1.
Receiver Front Panel 3-2

Figure 5-2.
Receiver Rear Panel. 3-4

Figure 5-3.
Transmitter Bottom Panel 3-6

Figure 5-4.
Transmitter Top Panel 3-8

Figure 5-5.
Transmitter Rear Panel Battery Compartment 3-10

Figure 6-1.
Positioning the Receiver 4-2

Figure 6-2.
Attaching the Receiver Antenna 4-3

Figure 6-3.
Attaching the Receiver Interconnect Cables. 4-3

Figure 6-4.
Attaching the Monitor Interconnect Cables. 4-4

Figure 6-5.
Attaching the Remote Mark Interconnect Cable 4-4

Figure 6-6.
Attaching the Receiver Antenna 4-5

Figure 6-7.
Attaching the Monitor Interconnect Cable to a 120 Series Monitor 4-6

Figure 6-8.
Attaching the Monitor Interconnect Cable to a 170 Series Monitor 4-6

Figure 6-9.
Accessing the Batteries 4-7

Figure 6-10.
Transmitter Battery Orientation. 4-8

Figure 6-11.
Attaching the Transmitter Antenna 4-9

Figure 6-12.
Attaching the Carrying Strap. 4-9

Figure 6-13.
Applying Power. 4-10

Figure 6-14.
Connecting an Ultrasound Transducer. 4-11

Figure 6-15.
Connecting the Headset 4-12

Figure 6-16.
Connecting an FECG Cable/Legplate 4-13

Figure 6-17.
Connecting a Tocotransducer or IUPC Cable 4-14

Tables

Table 3-1.
Definitions of Terminology 1-3

Table 3-2.
Equipment Symbols 1-8

Table 3-3.
FCC Rules Compliance 1-9

Table 4-1.
Summary of Monitor Parameters 2-3

Table 5-1.
Receiver Front Panel 3-3

Table 5-2.
Receiver Rear Panel. 3-5

Table 5-3.
Transmitter Bottom Panel 3-7

Table 5-4.
Transmitter Top Panel 3-9

Table 9-1.
Troubleshooting 7-2

Table 10-1.
General Supplies 8-2

Table 10-2.
Paper Supplies 8-3

Table 10-3.
Ultrasound Supplies 8-4

Table 10-4.
FECG Supplies 8-5

Table 10-5.
Tocotransducer Supplies 8-6

Table 10-6.
IUPC Supplies 8-7

Table 10-7.
MECG Supplies 8-8

For your notes

Preface

Overview of Telemetry Systems

This chapter provides an overview of the 340 Series of telemetry systems:

About Your System x
Identifying Your System xi

About Your System

Due to continuing product innovations, there are three versions of the Model 340 Telemetry System in hospitals today. All three versions operate identically from a user's perspective. Unless otherwise indicated, the information in this manual applies to all three devices.

Model 340 Original Release

The first release of the Model 340 Telemetry System operates in the frequency range 430–470 MHz.

Model 340 Plus

The Model 340 Plus also operates in the frequency range 430–470 MHz offering additional channel numbers than the original Model 340. In addition, the Model 340 Plus offers flexibility by allowing factory re-programming to an alternative channel number should interference become a factor in your location.

Model 340M

The Model 340M operates in the frequency range 608–614 MHz where the "M" indicates "medical". The Model 340M complies with the Federal Communications Commission (FCC) rules for Wireless Medical Telemetry Service (WMTS). In June 2000, the FCC allocated a new spectrum allowing potentially life-critical equipment to operate on an interference-protected basis. Refer to "Wireless Medical Telemetry Service" on page 1-10 in this manual for additional information.

Identifying Your System

Each GE Medical Systems Information Technologies device has a unique serial number tag for identification. For each Model 340 Telemetry System, a reference number can be used to determine if the unit is a Model 340 Original Release, Model 340 Plus, or Model 340M. If your device's REF number begins with "0", refer to "Identifying Model 340 Original Release and Model 340 Plus Telemetry Systems" next on this page. If your device's REF number begins with "3", refer to "Identifying a Model 340M Telemetry System" on the following page.

Identifying Model 340 Original Release and Model 340 Plus Telemetry Systems

If your device's REF number beings with "0":

- the fourth character identifies receiver or transmitter
- the fifth character identifies Model 340 Original Release or Model 340 Plus

Refer to Figure 1.

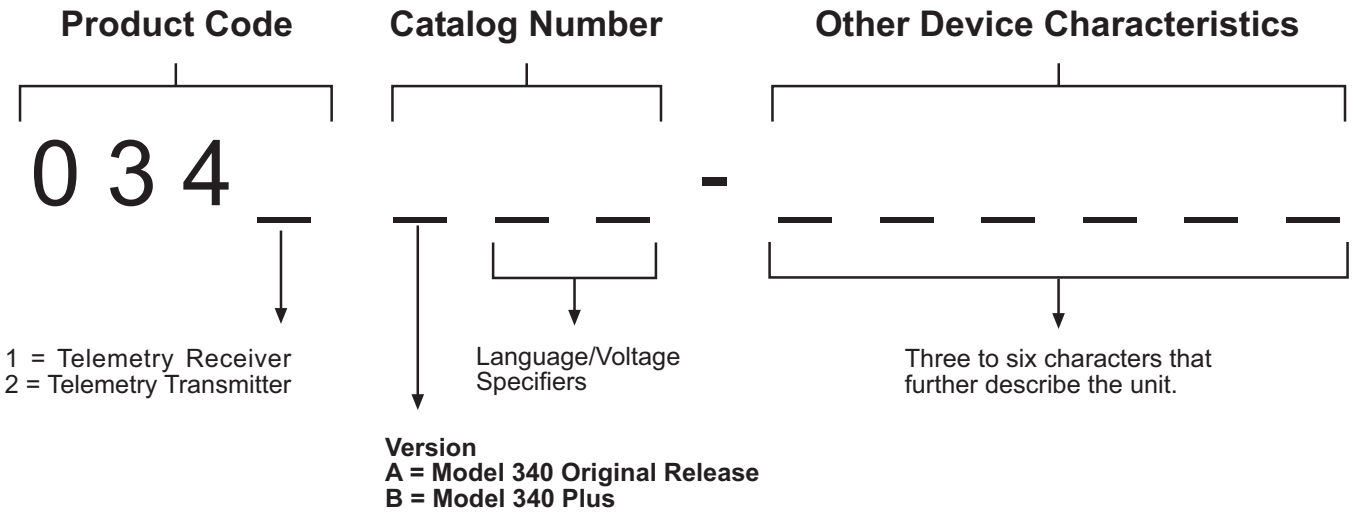

Figure Preface-1. Model 340 or Model 340 Plus REF Number

Example 1: If a serial number label shows REF 0341AAN-501, it is a receiver from a Model 340 Original Release system.

Example 2: If a serial number label shows REF 0342BBN-XXX00B, it is a transmitter from a Model 340 Plus system.

Identifying a Model 340M Telemetry System

If your device's REF number beings with "3":

- the third character identifies receiver or transmitter
- the fourth character identifies Model 340M

Refer to Figure 2.

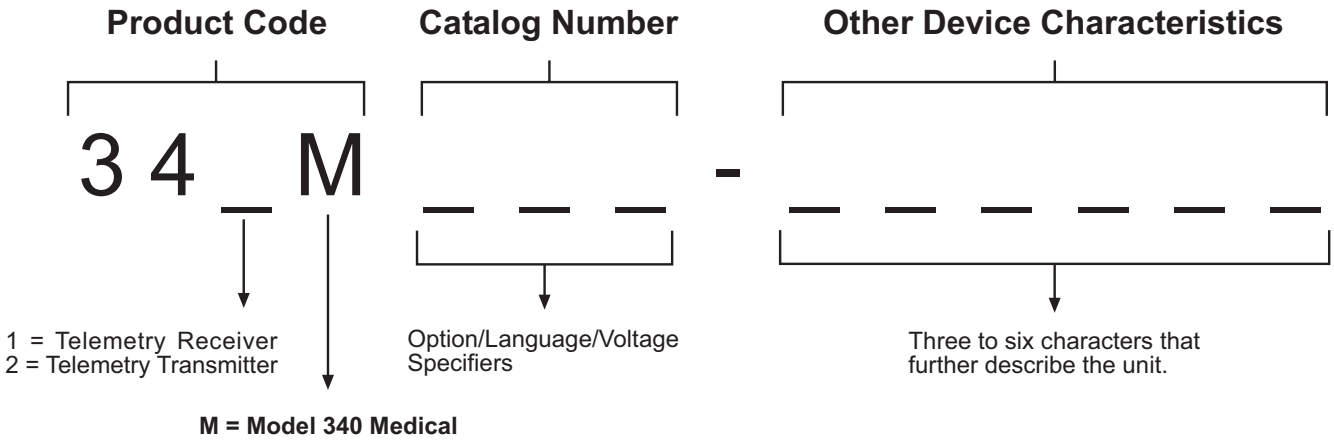

Figure Preface-2. Model 340M REF Number

Example 1: If a serial number label shows REF 341MCCN-XXX00A, it is a receiver from a Model 340M telemetry system.

Example 2: If a serial number label shows REF 342MBBN-XXX000B, it is a transmitter from a Model 340M telemetry system.

Chapter 1

⚠ Safety

The information presented in this section is important for the safety of both the patient and operator and also serves to enhance equipment reliability. This chapter describes how the terms Danger, Warning, Caution, Important, and Note are used throughout the manual. In addition, standard equipment symbols are defined.

This section includes the following important information:

General Information. 1-2
Definitions of Terminology 1-3
Equipment Safety Information 1-4
Equipment Symbols 1-8
FCC Information 1-9

General Information

General Use

If any equipment is cold to the touch or below ambient temperature, allow it to stabilize before use.

To ensure patient safety, use only parts and accessories manufactured or recommended by GE Medical Systems *Information Technologies*. Parts and accessories used shall meet the requirements of IEC 601.1.1.

Disposable devices are intended for single use only. They should not be reused.

Periodically, and whenever the integrity of the equipment is in doubt, test all functions.

Refer to the "Maternal/Fetal Monitoring Operator's Manual" for information concerning the limitations of internal and external fetal heart rate monitoring techniques.

Responsibility of the Manufacturer

GE Medical Systems *Information Technologies* (hereinafter *Information Technologies*) is responsible for the effects on safety, reliability, and performance if:

- assembly operations, extensions, readjustments, modifications, or repairs are carried out by persons authorized by *Information Technologies*;
- the electrical installation of the relevant room complies with the requirements of appropriate regulations; and
- the equipment is used in accordance with the instructions for use.

Definitions of Terminology

Six types of special notices are used *throughout* this manual. They are: Danger, Warning, Caution, Contraindication, Important, and Note. The warnings and cautions in this safety section relate to the equipment in general and apply to all aspects of the equipment. Be sure to read the other chapters because there are additional warnings and cautions which relate to specific features of the equipment.

When grouped, warnings and cautions are listed alphabetically and do not imply any order of importance.

Table 1-1. Definitions of Terminology

Danger	A **DANGER** notice indicates an imminently hazardous situation which, if not avoided, will result in death or serious injury.
Warning	A **WARNING** indicates a potentially hazardous situation which, if not avoided, could result in death or serious injury.
Caution	A **CAUTION** indicates a potentially hazardous situation which, if not avoided, may result in minor or moderate injury. Cautions are also used to avoid damage to equipment.
Contraindication	A **CONTRAINDICATION** describes any special symptom or circumstance that renders the use of a remedy or the carrying out of a procedure inadvisable, usually because of a risk.
Important	An **IMPORTANT** notice indicates an emphasized note. It is something you should be particularly aware of; something not readily apparent.
Note	A **NOTE** indicates a particular point of information; something on which to focus your attention.

Equipment Safety Information

Warnings

WARNINGS

ACCIDENTAL SPILLS—In the event that fluids are accidentally spilled on the equipment, take the equipment out of operation and inspect for damage.

APPLICATION—This equipment is not designed for direct cardiac connection.

CONDUCTIVE CONNECTIONS—Avoid making any conductive connections to applied parts (patient connection) which are likely to degrade safety.

CONDUCTIVE PARTS—Ensure that the conductive parts of the lead electrodes and associated connectors do not contact other conductive parts including earth.

CONNECTIONS—The correct way to connect a patient to the transmitter is to plug the ***electrode leads*** into the ***patient cable*** which in turn connects to the ***transmitter***. The ***receiver*** is connected to the ***wall socket*** by the ***power cord***. Do ***not*** plug the electrode leads into the power cord, a wall socket, or an extension cord.

DEFIBRILLATION—This equipment is not designed for use with defibrillators.

ELECTRICAL SHOCK—To reduce the risk of electrical shock, do not remove equipment covers. Refer servicing to qualified personnel.

ELECTROMAGNETIC INTERFERENCE—Be aware that strong electromagnetic fields may interfere with equipment operation. Interference prevents the clear reception of signals by the device. If the hospital is close to a strong transmitter such as TV, AM or FM radio, police or fire stations, a HAM radio operator, an airport, or cellular phone, their signals could be picked up as signals by the equipment. If you feel interference is affecting the equipment, contact your Service Representative to check the equipment in your environment.

WARNINGS

ELECTROSURGERY—The equipment is not designed for use with high-frequency surgical devices. In addition, measurements may be affected in the presence of strong electromagnetic sources such as electrosurgery equipment.

EXPLOSION HAZARD—Do not use this equipment in the presence of flammable anesthetics or inside an oxygen tent.

GROUNDING—Do not defeat the three-wire grounding feature of the power cord by means of adaptors, plug modifications, or other methods. A dangerous shock hazard to both patient and operator may result.

INSTRUCTIONS—For continued and safe use of this equipment, it is necessary to follow all listed instructions. However, the instructions provided in this manual in no way supersede established medical procedures concerning patient care. The device does not replace observation and evaluation of the patient, at regular intervals, by a qualified care provider who will make diagnoses and decide on treatments and interventions.

INTERFACING OTHER EQUIPMENT—Monitoring equipment must be interfaced with other types of medical equipment by qualified biomedical engineering personnel. Be certain to consult manufacturers' specifications to maintain safe operation.

LEAKAGE CURRENT TEST—The interconnection of auxiliary equipment with this device may increase the total leakage current. When interfacing with other equipment, a test for leakage current must be performed by qualified biomedical engineering personnel before using with patients. Serious injury or death could result if the leakage current exceeds applicable standards. The use of accessory equipment not complying with the equivalent safety requirements of this equipment may lead to a reduced level of safety of the resulting system. Consideration relating to the choice shall include: use of the accessory in the patient vicinity; and evidence that the safety certification of the accessory has been performed in accordance with the appropriate IEC 601.1 and/or IEC 601.1.1 harmonized national standard.

WARNINGS

LINE ISOLATION MONITOR TRANSIENTS—Line isolation monitor transients may resemble actual cardiac waveforms, and thus cause incorrect heart rate determinations and alarm activation (or inhibition).

MRI USE—Do not use the equipment during MRI scanning; conducted current could potentially cause burns.

PATIENT CABLES AND LEADWIRES—Do not use patient cables and electrode leads that permit direct connection to electrical sources. Use only “safety” cables and leadwires. Use of non-safety patient cables and lead wires creates risk of inappropriate electrical connection which may cause patient shock or death.

PACEMAKER PATIENTS—Rate meters may continue to count the pacemaker rate during occurrences of cardiac arrest or some arrhythmias. Do not rely entirely upon rate meter alarms. Keep pacemaker patients under close surveillance. Refer to your monitor’s operator’s manual for disclosure of the pacemaker pulse rejection capability.

SIMULTANEOUS DEVICES—Do not simultaneously connect more than one device that uses electrodes to detect ECG and/or respiration to the same patient. Use of more than one device in this manner may cause improper operation of one or more of the devices.

STRANGULATION—Make sure all patient cables, leadwires, and tubing are positioned away from the patient’s head to minimize the risk of accidental strangulation.

WATER BIRTHS—Do not use a fetal or maternal/fetal monitor to ***directly*** monitor patients during water births, in whirlpool or submersion water baths, during showers, or in any other situation where the mother is immersed in water. Doing so may result in electrical shock hazard.

Cautions

CAUTIONS

ANNUAL SERVICING—For continued safety and performance of the equipment, it is recommended that the calibration, accuracy, and electrical safety of the equipment be verified on an annual basis by an *Information Technologies* Service Representative.

DAILY INSPECTION—It is essential that the equipment and accessories be inspected prior to every use.

ENVIRONMENT—The performance of the equipment has not been tested in certain areas, such as x-ray and imaging suites. The equipment is not recommended for use in these environments.

PERFORMANCE—Report all problems experienced with the equipment. If the equipment is not working properly, contact your Service Representative for service. The equipment should not be used if it is not working properly.

Equipment Symbols

The following is a list of symbols used on products manufactured by *Information Technologies*. Some symbols may not appear on your equipment.

Table 1-2. Equipment Symbols	
⚠	ATTENTION: Consult accompanying documents.
	TYPE B EQUIPMENT. Type B equipment is suitable for intentional external and internal application to the patient, excluding direct cardiac application.
	TYPE BF EQUIPMENT. Type BF equipment is suitable for intentional external and internal application to the patient, excluding direct cardiac application. Type BF equipment has an F-type applied part.
	DEFIBRILLATOR-PROOF TYPE BF EQUIPMENT: Type BF equipment is suitable for intentional external and internal application to the patient, excluding direct cardiac application. Type BF equipment is type B equipment with an F-type isolated (floating) part. The paddles indicate the equipment is defibrillator proof.
~	ALTERNATING CURRENT (AC).
IPX1	DRIP PROOF.
	EQUIPOTENTIALITY.
O	POWER OFF: disconnection from the mains.
I	POWER ON: connection to the mains.

FCC Information

FCC Rules Compliance

This equipment complies with the FCC rules shown in Table 1-3. (Refer to "Identifying Your System" on page xi for information about identifying what type of telemetry system you have in your hospital.) Operation is subject to the condition that this device does not cause harmful interference.

Table 1-3. FCC Rules Compliance

Telemetry	Transmitter	Receiver
Model 340 Original Release	Part 90	Part 15
Model 340 Plus	Part 90	Part 15
Model 340M	Part 95	Part 15

FCC RF Exposure Compliance

IMPORTANT
RF EXPOSURE—To comply with FCC RF exposure compliance requirements, users should avoid grasping the antenna for any extended period of time while the device is in operation.

FCC Service Information

Servicing the radio frequency transmitter and receiver sections of the Model 340 Telemetry System requires an FCC General Radio Telephone License.

Any changes or modifications made to the Model 340 Telemetry System that are not expressly approved by *Information Technologies*, could void the user's authority to operate this equipment.

Wireless Medical Telemetry Service

This section applies to Model 340M Telemetry Systems only. Refer to "Identifying Your System" on page xi for information about identifying what type of telemetry system you have in your hospital.

IMPORTANT
Operation of a Model 340M Telemetry System requires prior coordination with a frequency coordinator designated by the FCC for the Wireless Medical Telemetry Service.

In June 2000, the FCC allocated new spectrum and established rules for Wireless Medical Telemetry Service (WMTS) allowing potentially life-critical equipment to operate on an interference-protected basis.

The frequency allocation for WMTS provides spectrum where the equipment can operate on a primary basis increasing the reliability of this important service. The FCC allocated 14 MHz of spectrum for use by medical telemetry equipment in the 608–614 MHz, 1395–1400 MHz, and 1429–1432 MHz bands. This allocation was based on a needs assessment conducted by the American Hospital Association (AHA).

The 608–614 MHz band, which corresponds to TV channel 37 had been reserved for radio astronomy uses, so this action elevates medical telemetry to a co-primary status with radio astronomy in this band. The 1395–1400 MHz and 1429–1432 MHz bands were government bands reallocated for non-government use.

WMTS is designated as one of the Citizen's Band Services in Part 95 of the rules and licensed by rule to eliminate the possible costs and delays to obtain individual operator's licenses. The medical telemetry equipment is authorized under the certification procedure in Part 2 of the rules. One or more frequency coordinators maintain a database of all equipment used in conjunction with WMTS.

For more information visit http://www.fcc.gov.

Chapter 2

Introduction

This chapter contains the following information:

Product Summary 2-2
Product Features 2-3

Product Summary

The Corometrics Model 340 Telemetry System (receiver and transmitter) provides a wireless means of transmitting heart rate and uterine activity signals from an ambulatory mother to a bedside fetal or maternal/fetal monitor. The system operates with the following Corometrics brand monitors; if your monitor is not listed, check with your saleperson or service representative for a more current list.

- Model 115
- Model 116
- Model 118
- 120 Series*
- Model 145
- Model 150
- Model 151
- Model 155
- 170 Series

NOTE: The Model 340 Telemetry System does ***not*** support fetal movement detection.

The system monitors ultrasound, ECG (FECG or MECG), and uterine activity (TOCO or IUPC) signals individually or in combination—depending on which parameters are available in the fetal or maternal/fetal monitor. Refer to your monitor's operator's manual as needed.

* *A 120 Series Monitor requires a Communications Board in order to interface to a Model 340 Telemetry System. If your monitor does not have this option, an upgrade kit is available as cat. no. (REF) 1559BAO. Contact your Service Representative for more information.*

Product Features

The following is a summary of product features:

- Battery operated transmitter provides up to 20 hours* of continuous transmission when operated with fresh batteries.
- A Low Battery indicator, accompanied by an audio indicator, signals an impending low-battery condition.
- A transmitter headset* allows the patient or staff to hear the ultrasonically detected heartbeats for reassurance as well as to verify proper transducer placement.
- A Signal Quality indicator verifies the strength of the radio transmission signal.
- Transducers are quickly and easily interchangeable amongst the Model 340 Telemetry System and most Corometrics brand monitors:
  - *Models 116, 118, 150, 151, 155, and 170 Series:* transducers are interchangeable.
  - *120 Series:* ECG rectangular connector cables are *not* compatible; round connector cables are compatible.
  - *Models 115 and 145:* cat. no. (REF) 5600 ultrasound transducers *cannot* be used with a Model 340. Use only cat. no. (REF) 5700 transducers when the using a Model 115 or 145 with a Model 340 Telemetry System.
- Provides simultaneous monitoring of two heart rates (twins or maternal/fetal) when used with a monitor supporting these parameters. Refer to Table 2-1 for a summary of monitor parameters.

IMPORTANT

INSTRUCTIONS—The operator should review and be familiar with the operator's manual for the fetal or maternal/fetal monitor as well as the "Maternal/Fetal Monitoring Operator's Manual".

Table 2-1. Summary of Monitor Parameters

	115	116	118	126	128	129	145	150	151	151D	155	171	172	173	174
TOCO	✓	✓	✓	✓	✓	✓	✓	✓	✓	✓	✓	✓	✓	✓	✓
IUPC	✓	✓	✓	✓	✓	✓			✓	✓				✓	✓
US	✓	✓	✓	✓	✓	✓	✓	✓	✓	✓	✓	✓	✓	✓	✓
FECG	✓	✓	✓	✓	✓	✓			✓	✓				✓	✓
MECG	✓	✓	✓			✓			✓	✓					

* *Use of the headset will deplete the batteries more rapidly.*

For your notes

Chapter 3

Controls, Indicators, and Connectors

This section describes all controls, indicators, and connectors on a Model 340 Telemetry System.

Receiver. 3-2
Transmitter 3-6

Receiver

Receiver Front Panel

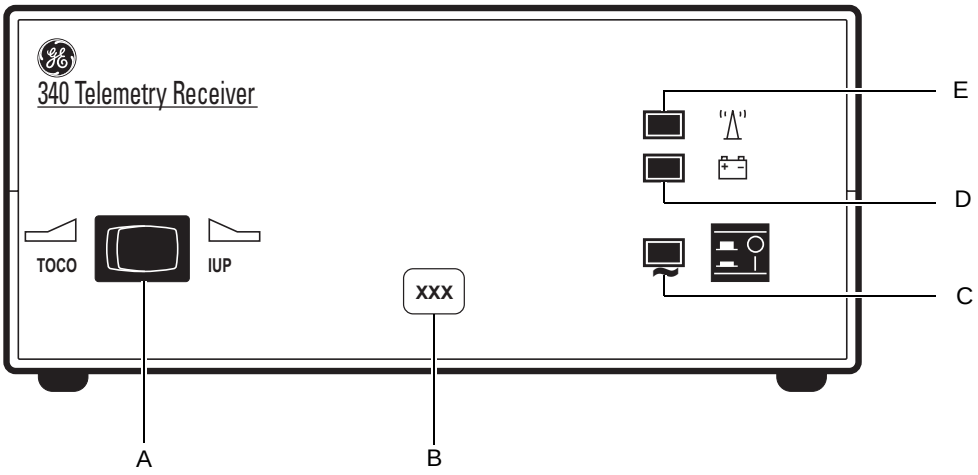

Figure 3-1. Receiver Front Panel

Table 3-1. Receiver Front Panel		
	Name	**Description**
A	UA Mode Selector Switch	This switch communicates the active uterine activity mode to the fetal or maternal/fetal monitor: ■ When monitoring with a tocotransducer, set the switch to the TOCO position. ■ When monitoring with an intrauterine pressure catheter, set the switch to the IUP position.
B	Channel Number	The channel number is the customer-designated receiving frequency of the receiver. For each telemetry system, the channel number of the receiver must be identical to the channel number of the transmitter. Also, if you have more than one telemetry system, or other RF devices, each system must have a unique channel number.
C	Power Switch and Indicator	The Power switch turns the receiver on (I) and off (O). When set to on, the green Power indicator illuminates.
D	Low Battery Indicator	The red Low Battery indicator *flashes* when you have approximately 10 minutes of transmitter battery power remaining. The Low Battery indicator stops flashing and *lights continuously* as soon as the battery is depleted.
E	Signal Indicator	The green Signal indicator *lights continuously* when the receiver is accepting radio frequency signals from the transmitter. The Signal indicator *flashes* if the signal strength is weak or marginal.

Receiver Rear Panel

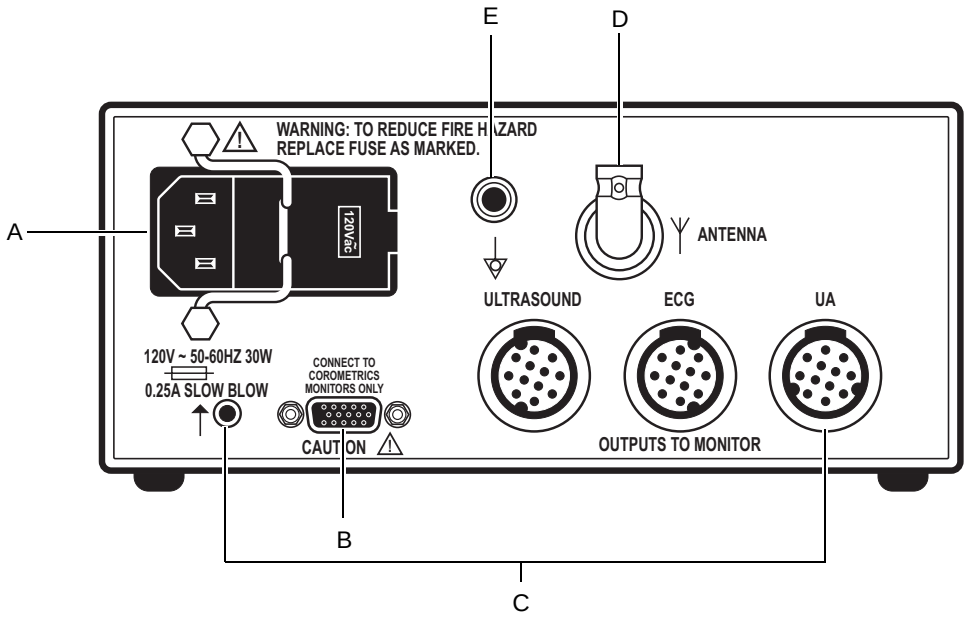

Note: Antenna shown removed.

Figure 3-2. Receiver Rear Panel

Table 3-2. Receiver Rear Panel		
	Name	**Description**
A	AC Line Connector and Fuseholder Module	This module houses the AC-line input connector and the main fuses for the receiver: ■ 100–120 VAC: requires two, 0.25 A slow-blow fuses. ■ 220–240 VAC: requires two, 0.2 A time-lag fuses.
B	Auxiliary Output Connector	This connector is used with 120 and 170 Series Monitors only. Do not use this connection method for Models 115, 116, 118, 145, 150, 151, and 155 Monitors. This connector outputs the US, ECG, UA, and Mark signals, acquired by telemetry, to a 120 or 170 Series Monitor. See page 4-5 for complete interconnection details. **As soon as any telemetry mode is detected, the front panel of the 120 or 170 Series Monitor is disabled and all front panel inputs are ignored. In other words, telemetry and monitor modes cannot be "mixed and matched'; you must use telemetry only or direct monitoring only.** **For proper operation with a 170 Series Monitor, disconnect all transducers from the front panel of the monitor.**
C	US, ECG, UA, and Mark Connectors	These connectors are used with Models 115, 116, 118, 145, 150, 151, and 155 Monitors only. Do not use this connection method for 120 and 170 Series Monitors. Each connector outputs the respective signal, acquired by telemetry, to the fetal or maternal/fetal monitor: ■ US: light grey connector which outputs the ultrasound signal. ■ ECG: grey connector which outputs the FECG or MECG signal. ■ UA: white connector which outputs the TOCO or IUPC signal. ■ Mark: connector which outputs the Event Mark signal. See page 4-2 for complete interconnection details.
D	Antenna Connector	Twist-on connector for attaching the receiver antenna.
E	Equipotential Lug	Binding post terminal directly connected to the chassis for use as an equipotentiality connection.

Transmitter

Transmitter Bottom Panel

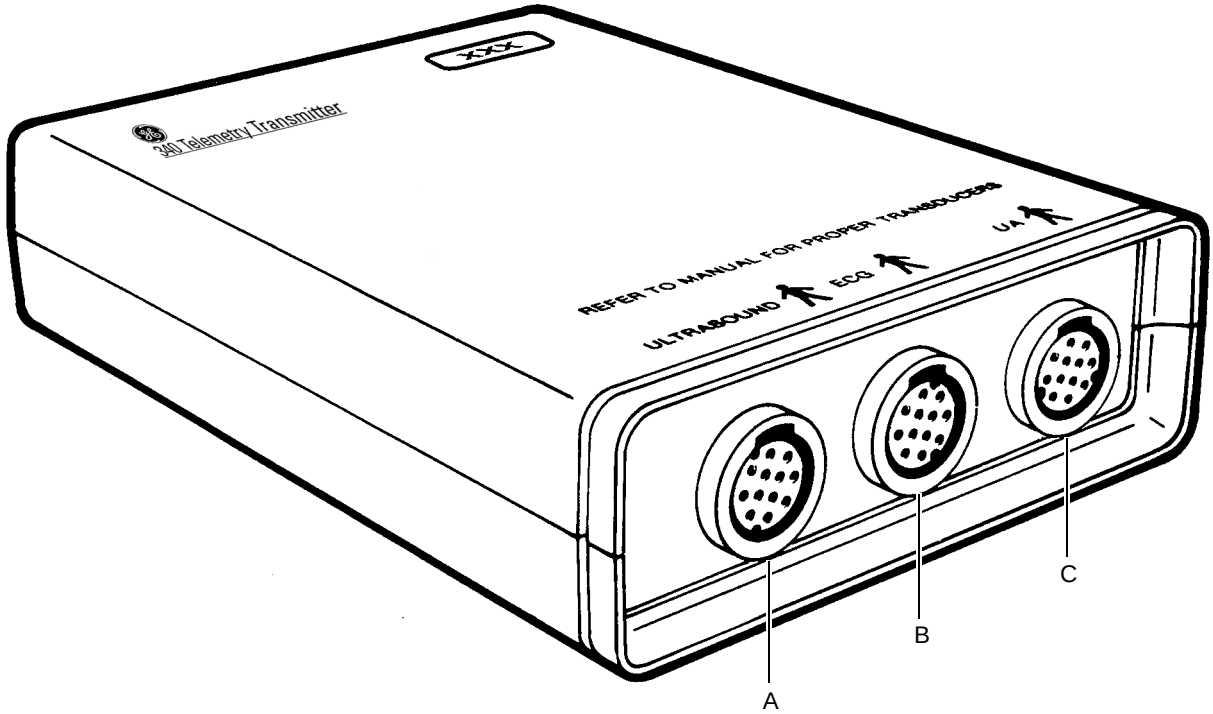

Figure 3-3. Transmitter Bottom Panel

Table 3-3. Transmitter Bottom Panel		
	Name	**Description**
A	Ultrasound Input	Connect a Corometrics 5700 Series pulsed Doppler ultrasound transducer to this light gray receptacle. **Corometrics 5600 Series continuous-wave ultrasound transducers are not compatible with the Model 340 Telemetry System. The 5600 Series Transducer was designed for use with Models 115 and 145 Monitors and Models 320 and 330 Telemetry Systems.**
B	ECG Input	Connect an FECG cable/legplate or MECG cable plug to this grey receptacle. This connector is compatible with all *round*-connector FECG/MECG patient cables used with Corometrics-brand monitors.
C	UA Input	Connect a tocotransducer, IUPC, or strain gauge transducer plug to this white receptacle. Contact your Sales Representative about compatibility.

Transmitter Top Panel

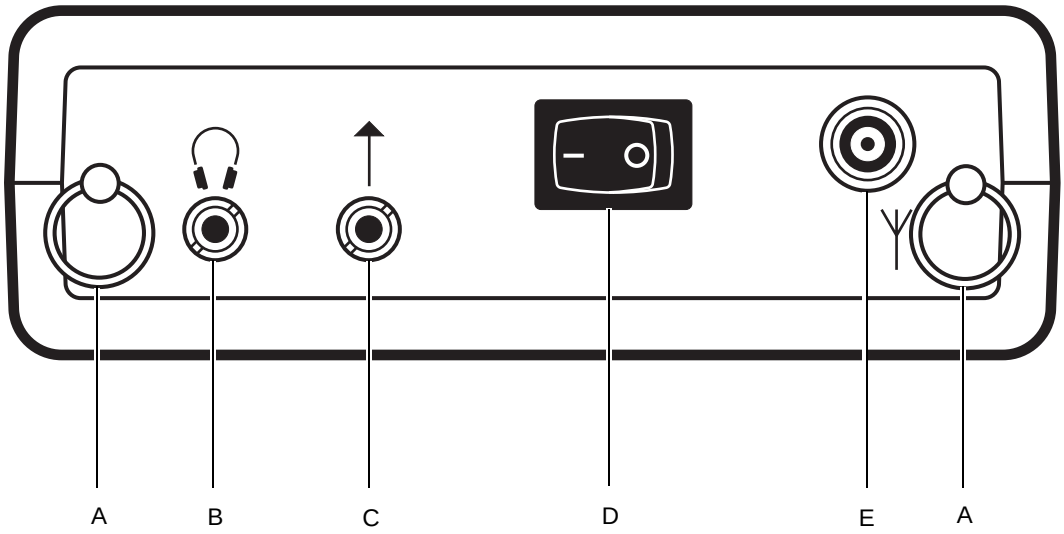

Note: Antenna shown removed.

Figure 3-4. Transmitter Top Panel

Table 3-4. Transmitter Top Panel		
	Name	**Description**
A	Loops	Loops for attaching the carrying strap.
B	Headset Connector	Connect the headset to this receptacle to listen to the fetal heart rate derived from ultrasound.
C	Remote Event Mark Connector	Connect a Corometrics Remote Event Marker to this receptacle. When the marker's button is pressed for at least one second, an event mark signal is transmitted and one of the following marks prints on the strip chart paper: ■ ↑: This annotation is commonly used to record an "event." This mark is available on all Corometrics-brand monitors. ■ FM↑: This annotation is commonly used as an indication that the mother has perceived fetal movement. (Refer to your monitor's operator's manual to learn if your monitor supports this feature. Refer to your monitor's service manual for information about enabling the option.)
D	Power Switch	Moving the switch to the *on* position (I) turns on the transmitter; moving the switch to the *off* position (O), turns off the transmitter.
E	Antenna Connector	Twist-on connector for attaching the transmitter antenna.

Transmitter Rear Panel Battery Compartment

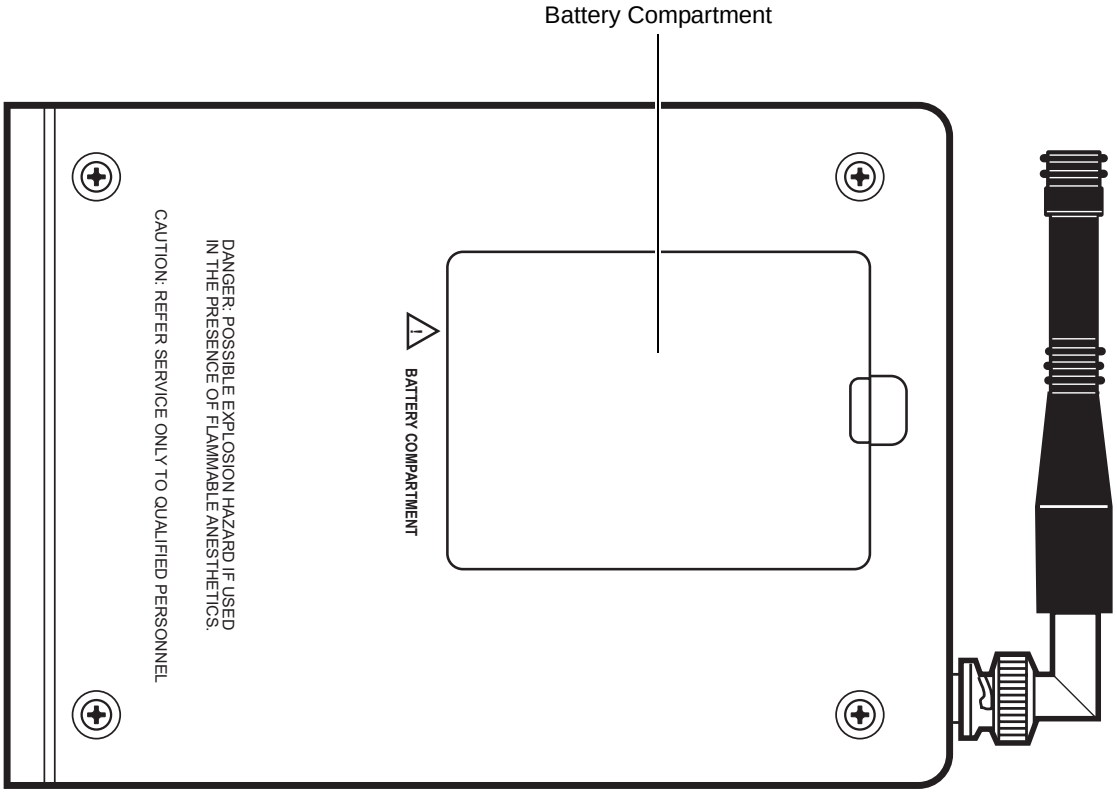

Figure 3-5. Transmitter Rear Panel Battery Compartment

The battery compartment holds four “AA” alkaline batteries.

CAUTION

BATTERY STRENGTH—When the battery power is low, the transmitter emits a chirping sound every 4–5 seconds. (For Model 340 Plus and Model 340M Systems, the frequency of chirping increases as the batteries become depleted.) The onset of chirping signals approximately 10 minutes of remaining battery power. The chirping continues until the battery power is completely depleted, at which time the transmitter stops sending data.