PCTEST Engineering Laboratory, Inc.

6660-B Dobbin Road • Columbia, MD 21045 • U.S.A.
TEL (410) 290-6652 • FAX (410) 290-6654
http://www.pctestlab.com

# CERTIFICATE OF COMPLIANCE (SAR EVALUATION)

**GE Marquette Medical Systems, Inc.**
**8200 West Tower avenue**
**Milwaukee,WI 53223**
**Attn: Mike Steinike**
**RF Electronics Engineer**

**Dates of Tests: May 7, 2001**
**Test Report S/N: SAR.210503269.OU5**
**Test Site: PCTEST Lab, Columbia, MD USA**

| | |
|---|---|
| **FCC ID** | **OU5418500-APRO** |
| **APPLICANT** | **GE Marquette Medical Systems, Inc.** |

| | |
|---|---|
| **EUT Type:** | **Wireless Medical Telemetry Transmitter (GMSK)** |
| **Tx Frequency:** | **608.025 - 613.975 MHz** |
| **Max. RF Output Power:** | **1.2 mW ERP** |
| **Trade Name/Model(s):** | ***GE* Marquette *ApexPro*** |
| **FCC Classification:** | **Wireless Medical Telemetry Service (WMTS)** |
| **Application Type:** | **Certification** |
| **FCC Rule Part(s):** | **§2.1093; 95(H)** |
| **Maximum SAR:** | **0.1421 W/kg Body SAR (GMSK)** |

**This wireless portable device has been shown to be compliant for localized specific absorption rate (SAR) for uncontrolled environment/general population exposure limits specified in ANSI/IEEE Std. C95.1-1992 and had been tested in accordance with the measurement procedures specified in ANSI/IEEE Std. C95.3-1992. (See Test Report)**

**I attest to the accuracy of data. All measurements reported herein were performed by me or were made under my supervision and are correct to the best of my knowledge and belief. I assume full responsibility for the completeness of these measurements and vouch for the qualifications of all persons taking them.**

*NVLAP accreditation does not constitute any product endorsement by NVLAP or any agency of the United States Government.*
*PCTEST certifies that no party to this application has been denied the FCC benefits pursuant to Section 5301 of the Anti-Drug Abuse Act of 1988, 21 U.S.C. 862.*

Randy Ortanez
President & Chief Engineer

**2 1 0 5 0 3 2 6 9 . O U 5**

NVLAP
LAB CODE 100431-0

*© 2001 PCTEST Engineering Lab., Inc.*

# Table of Contents

**1.1 SCOPE** ..... 1

**2.1 INTRODUCTION** ..... 2

**2.2 SAR Definition** ..... 2

**3.1 SAR MEASUREMENT SET-UP** ..... 3

**4.1 ISOTROPIC E-FIELD PROBE SYSTEM** ..... 4

**5.1 E-FIELD PROBE CALIBRATION PROCESS** ..... 5

**6.1 TORSO AND EQUIVALENT TISSUES** ..... 7

**7.1 SYSTEM SPECIFICATIONS** ..... 8

**8.1 MEASUREMENT PROCESS** ..... 9

**9.1 TEST POSITION OF THE EUT** ..... 10

**10.1 ANSI/IEEE C95.1 - 1992 RF EXPOSURE LIMITS** ..... 11

**11.1 MEASUREMENT UNCERTAINTIES** ..... 12

**12.1 SAR TEST DATA SUMMARY** ..... 13

**13.1 SAR TEST EQUIPMENT** ..... 14

**14.1 CONCLUSION** ..... 15

# SAR MEASUREMENT REPORT

## 1.1 SCOPE

***Environmental evaluation measurements of specific absorption rate[1] (SAR) distributions in simulated human tissues exposed to radiofrequency (RF) radiation from wireless portable devices for compliance with the rules and regulations of the U.S. Federal Communications Commission (FCC).[2]***

| | |
|---|---|
| **Applicant Name:** | **GE Marquette Medical Systems, Inc.** |
| **Address:** | **8200 West Tower avenue**<br>**Milwaukee,WI 53223** |
| **Attention:** | **Mike Steinike**<br>**RF Electronics Engineer** |

- EUT Type: Wireless Medical Telemetry Transmitter (GMSK)
- Trade Name: ***GE Marquette***
- Model(s): ***ApexPro***
- FCC IDENTIFIER: **OU5418500-APRO**
- Tx Frequency: 608.025 - 613.975 MHz (GMSK)
- Application Type: Certification
- FCC Classification: Wireless Medical Telemetry Service
- FCC Rule Part(s): § 2.1093, 95(H)
- Modulation(s): GMSK
- Max RF. Output Power: 1.2 mW ERP
- Date(s) of Tests: May 7, 2001
- Place of Tests: PCTEST Engineering Lab.
  Columbia, MD, U.S.A.
- Report Serial No.: SAR.210503269.OU5

**Fig. 1 SAR Test Setup**

NVLAP Lab Code 100431-0

[1] *Specific Absorption Rate (SAR) is a measure of the rate of energy absorption due to exposure to an RF transmitting source (wireless portable device).*
[2] *IEEE/ANSI Std. C95.1-1992 limits are used to determine compliance with FCC ET-Docket 93-62.*

## 2.1 INTRODUCTION

The FCC has adopted the guidelines for evaluating the environmental effects of radio frequency radiation in ET Docket 93-62 on Aug. 6, 1996 to protect the public and workers from the potential hazards of RF emissions due to FCC-regulated portable devices.[1]

The safety limits used for the environmental evaluation measurements are based on the criteria published by the American National Standards Institute (ANSI) for localized specific absorption rate (SAR) in *IEEE/ANSI C95.1-1992 Standard for Safety Levels with Respect to Human Exposure to Radio Frequency Electromagnetic Fields, 3 kHz to 300 GHz*. © 1992 by the Institute of Electrical and Electronics Engineers, Inc., New York, New York 10017.[2] The measurement procedure described in *IEEE/ANSI C95.3-1992 Recommended Practice for the Measurement of Potentially Hazardous Electromagnetic Fields - RF and Microwave*[3] is used for guidance in measuring SAR due to the RF radiation exposure from the Equipment Under Test (EUT). These criteria for SAR evaluation are similar to those recommended by the National Council on Radiation Protection and Measurements (NCRP) in *Biological Effects and Exposure Criteria for Radiofrequency Electromagnetic Fields,"* NCRP Report No. 86 © NCRP, 1986, Bethesda, MD 20814.[4] SAR is a measure of the rate of energy absorption due to exposure to an RF transmitting source. SAR values have been related to threshold levels for potential biological hazards.

## 2.2 SAR Definition

Specific Absorption Rate (SAR) is defined as the time derivative (rate) of the incremental energy ($dU$) absorbed by (dissipated in) an incremental mass ($dm$) contained in a volume element ($dV$) of a given density ($\rho$). It is also defined as the rate of RF energy absorption per unit mass at a point in an absorbing body (See Fig. 2).

$$SAR = \frac{d}{dt}\left(\frac{dU}{dm}\right) = \frac{d}{dt}\left(\frac{dU}{\rho\, dv}\right)$$

**Figure 2. SAR Mathematical Equation**

*SAR is expressed in units of Watts per Kilogram (W/kg).*

$$SAR = \sigma E^2 / \rho$$

Where:

| | | |
|---|---|---|
| $\sigma$ | = | Conductivity of the tissue-simulant material (S/m) |
| $\rho$ | = | Mass density of the tissue-simulant material (kg/m$^3$) |
| $E$ | = | Total RMS electric field strength (V/m) |

NOTE: The primary factors that control rate of energy absorption were found to be the wavelength of the incident field in relation to the dimensions and geometry of the irradiated organism, the orientation of the organism in relation to the polarity of field vectors, the presence of reflecting surfaces, and whether conductive contact is made by the organism with a ground plane.[4]

## 3.1 SAR MEASUREMENT SET-UP

The PCTEST Lab SAR measurement system consists of a completely automated robotic system, cell controller (Pentium Pro 200 computer), E-field probe, and phantom containing the brain equivalent material. The robot is a six-axis industrial robot performing precise movements to position the probe to the location (points) of maximum electromagnetic field (EMF) (See Fig. 3).

The Robot table consists of the power supply, robot controller, safety computer, teach pendant (Joystick), six-axis robot arm, and the probe. The cell controller consists of a PCTEST Pentium-Pro 200 MHz computer (Windows NT) with SAR Measurement software, National Instruments analog card, NEC monitor, keyboard, and a mouse. The robot controller is connected to the cell controller to communicate between the two computers. The probe data is connected to the cell controller via a high-impedance carbon-fiber cable to avoid field distortions and to minimize external noise, which would otherwise interfere with the data.

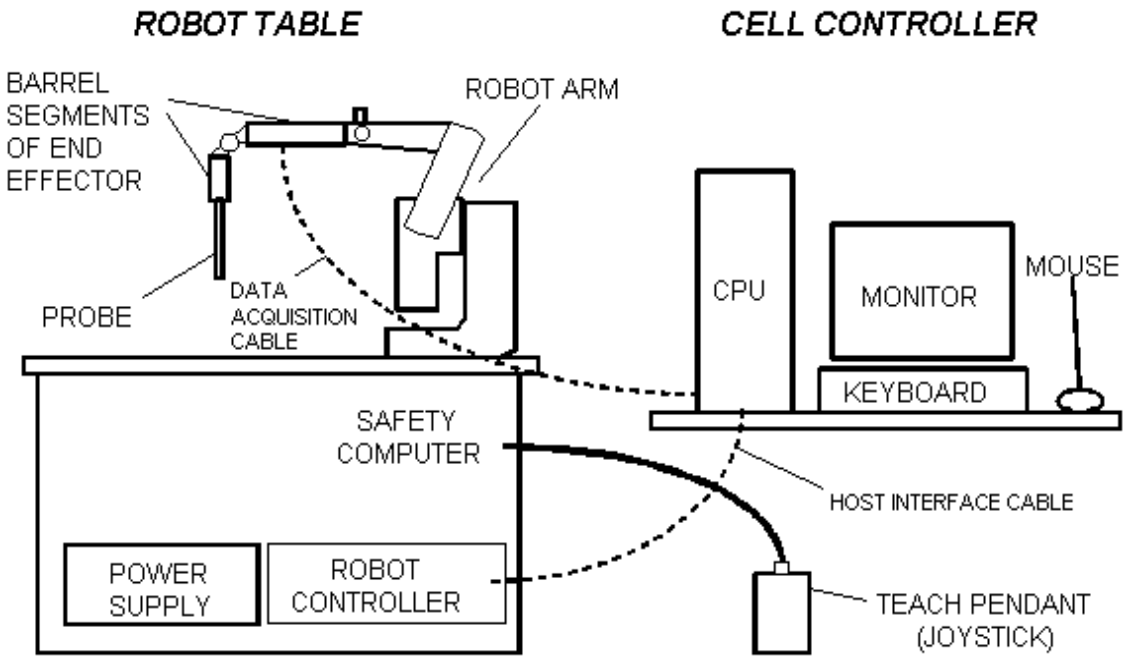


**Figure 3. PCTEST Robotics SAR Test Measurement Set-up**

When the Robot is in the home position, the Y-axis of the coordinate system is parallel to the line of intersection between the tabletop and the long axis of the Robot's Large Shoulder. The Teach Pendant may be used to establish the X,Y coordinate directions by depressing the 0-X and 0-Y MOTOR/AXIS switches while in axis mode.

The robot is first taught to position the probe sensor following a specific pattern of points. In the first sweep, the sensor enclosure touches the inside of the phantom head. The SAR is measured on a defined grid of points that are concentrated on the surface of the head closest to the antenna of the transmitting device (EUT).

# 4.1 ISOTROPIC E-FIELD PROBE SYSTEM

## 4.2 E-Field Probe

The near-field probe is an implantable isotropic E-field probe that measures the voltages proportional to the $|E|^2$ (electric) or $|H|^2$ (magnetic) fields. The probe is enclosed in a hollow plastic protective cylinder of a 9mm. outer diameter, a 0.5-mm. thickness and a 30-cm. length. This SAR measurement system and probe are similar to a measurement system developed by Motorola.[8] The E-probe contains three electrically small arrays of orthogonal dipoles strategically placed to provide greater accuracy and to compensate for near-field spatial gradients. The probe contains diodes that are placed over the gap of the dipoles to improve RF detection. The electrical signal detected by each diode is amplified by three DC amplifiers and are contained in a shielded container in the robot end effector so its performance is not affected by the presence of incident electromagnetic fields (see Fig. 4).

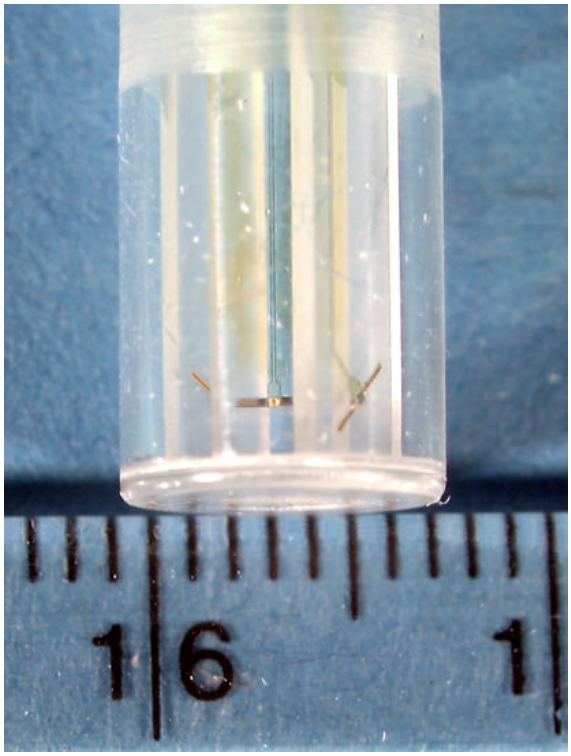


**Figure 4. Isotropic E-field Probe**

**Figure 5. Photograph of the Probe and the Phantom**

*(See Section 6.2 for E-Probes Specifications)*

# 5.1 E-FIELD PROBE CALIBRATION PROCESS

## 5.2 E-Probe Calibration

Each E-Probe/Probe amplifier combination has unique calibration parameters. A TEM calibration procedure is conducted to determine the proper amplifier settings to enter in the probe parameters. The amplifier settings are determined for a given frequency by subjecting the Probe to a known E-field density (1mW/cm$^2$) using a RF Signal generator, TEM cell, and RF Power Meter. The SAR measurement software is used for Probe calibration (See Fig. 6).

Calibration is performed in two steps:

The free space E-field from amplified probe outputs is determined in a test chamber. This calibration can be performed in a TEM cell if the frequency is below 1 GHz and in a waveguide or some other methodologies above 1 GHz for free space. For the free space calibration, we place the probe in the volumetric center of the cavity and at the proper orientation with the field. We then rotate the probe 360 degrees until the three channels show the maximum reading. The power density readings equate to 1mW/cm$^2$.

E-field temperature correlation calibration is performed in a flat phantom filled with the appropriate simulated brain tissue. The measured free space E-field in the medium correlate to the temperature rise in a dielectric medium.

For temperature correlation calibration, a RF transparent thermistor-based temperature probe is used in conjunction with the E-field probe. The location of the maximum E-field close to the phantom's bottom is determined as a function of power into the RF source—in this case, a dipole. The E-field probe is moved sideways so that the temperature probe, while affixed to the E-field probe, is placed at the previous location of power levels used for the E-field measurement are recorded. The following equation related SAR to initial temperature slope:

$$SAR = C\frac{\Delta T}{\Delta t}$$ where:

Dt = Exposure time (30 seconds),

C = Heat capacity of tissue (brain or muscle),

DT = Temperature increase due to RF exposure.

SAR is proportional to DT/Dt, the initial rate of tissue heating, before thermal diffusion takes place. Now it's possible to quantify the electric field in the simulated tissue by equating the thermally derived SAR to the E-field;

$$SAR = \frac{|E|^2 \cdot s}{P}$$ where:

σ = simulated tissue conductivity,

P = Tissue density (1.25 g/cm$^3$ for brain tissue)

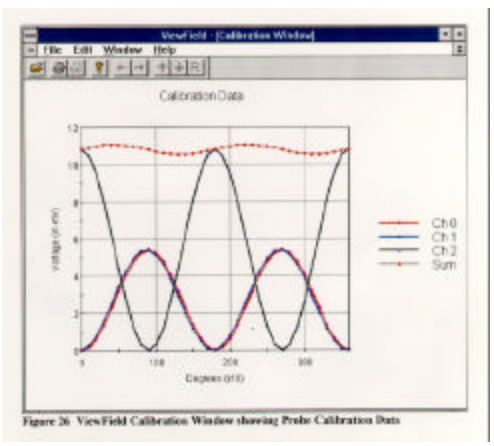


**Figure 6. Probe Calibration Data in ViewField Window**

## 5.3 Data Extrapolation

The probe offset is determined by measuring the distance between the center of the sensor to the end of the protective tube. The data is collected when the probe outer surface makes contact with the surface of the phantom and measures the corresponding field in the simulated tissue near the shell surface. An average slope is obtained from these data points nearest the surface and is used to define an exponential decay of the energy density with the depth.

The field attenuation versus depth is recorded and extrapolated to obtain the $|E|^2$ value at the surface of the phantom where the maximum SAR is located.

$$Slope = \frac{\frac{E_{total} \cdot Z_1}{E_{total} \cdot Z_2} + \frac{E_{total} \cdot Z_2}{E_{total} \cdot Z_3}}{2}$$

$$\exp = \ln(slope)\frac{offset}{spacing}$$

$$E_{total} \cdot Z_0 = E_{total} \cdot Z_1 \cdot e^{\exp}$$

## 5.4 Interpolation and Gram Averaging

The 1-cm. voltage ($E_{total}$ 1 cm) above the phantom's surface is needed to calculate the exposure of one gram of tissue. The SAR value (mW/g) estimates the average over a one-gram cube obtained from the extrapolated value ($E_{total}$ $Z_0$) and interpolated value ($E_{total}$ 1cm) obtained by interpolation as shown below.

$$SAR(mW/g) = \frac{E_{total} \cdot Z_0 + E_{total}1cm}{2} \cdot \frac{CF}{SensorFactor}$$

$$SensorFactor = \frac{10.8\,mV}{mW/cm^2} = \frac{0.0108V}{mW/cm^2}$$

*Conversion Factor (CF) = intermediate scaling constant for a particular probe which produced an output of 10.8 mV in the TEM cell when the flux density is 1 mW/cm$^2$*

# 6.1 TORSO AND EQUIVALENT TISSUES

## 6.2 Torso

The phantom is an anatomically shaped homogeneous model filled with a liquid simulating brain or muscle tissue. The phantom is placed at 0 degrees (horizontal position) with the torso placed on the EUT (see Fig. 8). The phantom is made of a shell of fiberglass 1.5mm thick (giving the worst case SAR value absorbed by brain or muscle tissue and the skull bones). The EUT is supported by a non-metallic (delrin) material*. Similar phantoms have been used to simulate human head modeling studies. [6][7]

## 6.3 Brain & Muscle Simulating Mixture Characterization

The brain & muscle mixture consist of a viscous gel using hydroxethylcellullose (HEC) gelling agent and saline solution (see Table 1). Preservation with a bactericide is added and visual inspection is made to make sure air bubbles are not trapped during the mixing process. The mixture is calibrated to obtain proper dielectric constant (permittivity) and conductivity of the brain or muscle. The mixture characterizations used for the brain or muscle tissue simulating liquid are according to the data by C. Gabriel and G. Hartsgrove [9].

| MIXTURE % | FREQUENCY (Muscle) 608 - 614 MHz |
|---|---|
| WATER | 52.4 |
| SUGAR | 45.0 |
| SALT | 1.4 |
| BACTERIACIDE | 0.2 |
| HEC | 1.0 |

**Table 1. Composition of the Brain & Muscle Tissue Equivalent Matter**

# 7.1 SYSTEM SPECIFICATIONS

## 7.2 Robotic System Specifications

### Specifications

| | |
|---|---|
| **POSITIONER:** | IDX Robot with 6 axis |
| **Repeatability:** | 0.002 in. |
| **Accuracy:** | 0.004 in. |

### Data Acquisition

| | |
|---|---|
| **Processor:** | Pentium PRO CPU |
| **Clock Speed:** | 200 MHz |
| **Operating System:** | Windows NT |
| **Data Card:** | National Instruments Analog Card |
| **Software:** | IDX Flexware |
| **AMPLIFIER GAIN:** | Adjustable 20 - 40, high isolation between channels |
| **Connecting Lines:** | High Impedance 4.5 kohm/foot |
| **Sample Rate:** | 6000 |

### E-Field Probe

| | E-Probe #1 | E-Probe #2 |
|---|---|---|
| **Probe Offset:** | 2.5 mm | 2.5 mm |
| **Frequency Band:** | 150 - 2500 MHz | 150 - 2500 MHz |
| **Conversion Factor:** | 0.601 (800-880MHz) | 0.79 (800-880MHz) |
| **Conversion Factor:** | 1.20 (1850-1910MHz) | 1.20 (1850-1910MHz) |
| **Dynamic Response:** | 2 µW/g - 10 mW/g | 2 µW/g - 10 mW/g |
| **Input:** | 2.2 meg | 2.2 meg |
| **Isotropicity:** | ± 0.5 dB | ± 0.5 dB |
| **Resolution:** | 0.1 $cm^3$ | 0.1 $cm^3$ |

### Phantom

| | Phantom #1 (Left) | Phantom #2 (Right) |
|---|---|---|
| **Phantoms:** | Homogenous | Homogenous |
| **Shell Material:** | Fiberglass | Fiberglass |
| **Thickness:** | 1 - 1.5 mm | 1 - 1.5 mm |
| **Head:** | with Left ear | with Right ear |

| Tissue Parameters | 608 - 614 MHz (Muscle) |
|---|---|
| **Dielectric Constant: e** | 51.7 |
| **Conductivity: s** | 1.10 |

## 8.1 MEASUREMENT PROCESS

The measurement process consists of the process parameters, probe parameters, EUT product data, and measurement scans (teach points). The measurement process is a set of predefined points to be scanned and measured by the probe, DC amplified and process by the cell controller. The corresponding voltages determined by the electric and magnetic fields are extrapolated to determine peak SAR value.

## 8.2 Area & Zoom Scan Grids

The SAR Measurement System measures field strength by employing three different types of systematic measurement scans: an Area scan, a Zoom scan, and an SAR scan. Area and Zoom scans measure field strength in a rectangular area within the XY plane (a plane parallel to the top of the Robot Table). The measurement area is divided into a grid of small squares defined by equally spaced grid lines. During an actual measurement process, the probe moves along grid lines systematically recording the field strength at grid line intersections. Typically, after an Area scan is completed, a Zoom scan is conducted at the peak field strength value (hot spots) that was measured in the Area scan. The Zoom scan usually has a greater resolution (smaller grid squares) than the Area scan, and covers only a fraction of the measurement area in the Area Scan (see Fig. 7).

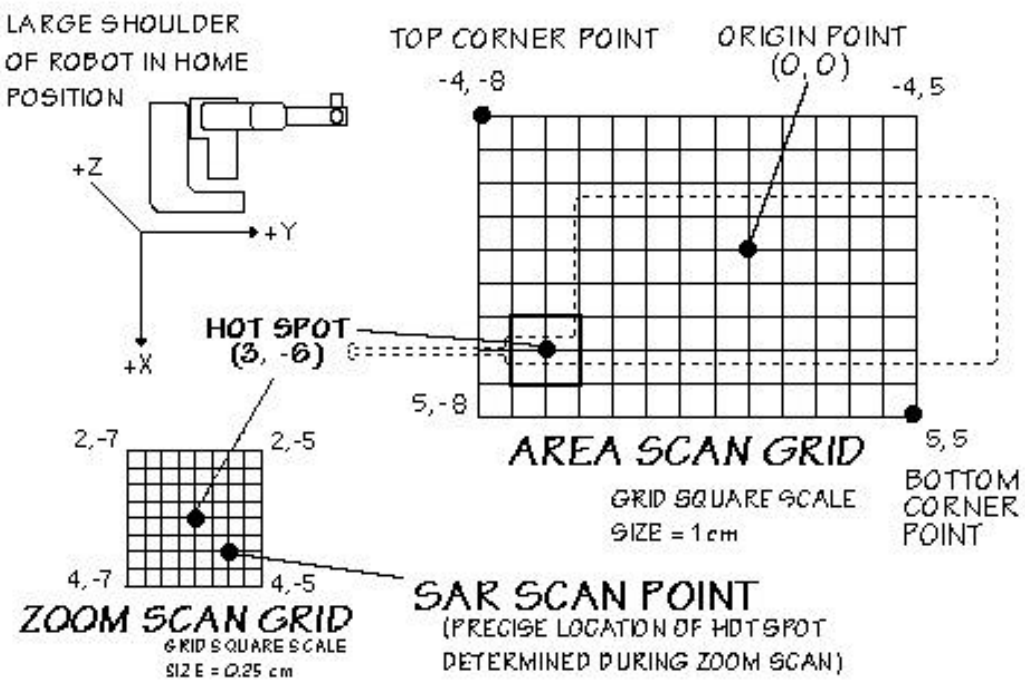


**Figure 7. SAR Measurement Points in Area Scan and Zoom Scan Grids Showing the Typical Hot Spot with respect to the Phone**

## 9.1 TEST POSITION OF THE EUT

## 9.2 EUT TEST SETUP

The EUT was tested in operating condition with the significant source of RF emissions placed below the torso of the phantom, producing worst-case SAR measurement (See Figure 8).

Fig. 8
Test Setup of EUT in operating position with the source of significant emissions below the phantom.

## 10.1 ANSI/IEEE C95.1 - 1992 RF EXPOSURE LIMITS

| HUMAN EXPOSURE | UNCONTROLLED ENVIRONMENT General Population (W/kg) or (mW/g) | CONTROLLED ENVIRONMENT Occupational (W/kg) or (mW/g) |
|---|---|---|
| **SPATIAL PEAK SAR *** (Brain) | 1.60 | 8.00 |
| **SPATIAL AVERAGE SAR **** (Whole Body) | 0.08 | 0.40 |
| **SPATIAL PEAK SAR ***** (Hands / Feet / Ankle / Wrist) | 4.00 | 20.00 |

**Table 2. Safety Limits for Partial Body Exposure [2]**

***NOTES:***

* The Spatial Peak value of the SAR averaged over any 1 gram of tissue (defined as a tissue volume in the shape of a cube) and over the appropriate averaging time.

** The Spatial Average value of the SAR averaged over the whole-body.

*** The Spatial Peak value of the SAR averaged over any 10 grams of tissue (defined as a tissue volume in the shape of a cube) and over the appropriate averaging time.

**Uncontrolled Environments** are defined as locations where there is the exposure of individuals who have no knowledge or control of their exposure.

**Controlled Environments** are defined as locations where there is exposure that may be incurred by persons who are aware of the potential for exposure, (i.e. as a result of employment or occupation).

## 11.1 MEASUREMENT UNCERTAINTIES

Measurement uncertainties in SAR measurements are difficult to quantify due to several variables including biological, physiological, and environmental. However, we estimate the measurement uncertainties in SAR to be less than 15-25 %.

According to ANSI/IEEE C95.3, the overall uncertainty are difficult to assess and will vary with the type of meter and usage situation. However, accuracies of ± 1 to 3 dB can be expected in practice, with greater uncertainties in near-field situations and at higher frequencies (shorter wavelengths), or areas where large reflecting objects are present. Under optimum measurement conditions, SAR measurement uncertainties of at least ± 2dB can be expected.[3]

According to CENELEC [5], typical worst-case uncertainty of field measurements is ± 5 dB. For well-defined modulation characteristics, the uncertainty can be reduced to ± 3 dB.

| Estimated Errors | Percent |
|---|---|
| Measurement of the Conductivity/Dielectric Constant of the Tissue Simulant | ± 5 % |
| Temperature Rise Calibration of Probe | ± 5 % |
| Measurement of Thermal Capacity of Tissue Simulant | ± 5 % |
| Accuracy of a Repeatable EUT Position | ± 10 % |
| Probe Isotropic Response | ± 12 % |
| Total Root-Sum Square Calculation | ± 17.9 % |

**Table 3. Breakdown of Individual Errors**

## 12.1 SAR TEST DATA SUMMARY

| | |
|---|---|
| Ambient TEMPERATURE (°C) | 21.5 |
| Relative HUMIDITY (%) | 50.1 |
| Atmospheric PRESSURE (kPa) | 101.1 |

**Mixture Type:** Muscle

**Dielectric Constant:** 51.7

**Conductivity:** 1.10 S/m

## 12.2 Measurement Results (GMSK Body SAR)

| FREQUENCY MHz | FREQUENCY TTX | Modulation | POWER * (mW) | Separation Distance (cm) | Antenna Position | SAR (W/kg) |
|---|---|---|---|---|---|---|
| 608.025 | 8521 | GMSK | 1.2 | Touching | Fixed | 0.1432 |
| 613.975 | 8759 | GMSK | 1.2 | Touching | Fixed | 0.1421 |
| **ANSI / IEEE C95.1 1992 - SAFETY LIMIT Spatial Peak Uncontrolled Exposure/General Population** | | | | **Body 1.6 W/kg (mW/g)** Averaged over 1 gram | | |

NOTES:

1. All modes of operation were investigated and the worst-case are reported.
2. Battery condition is fully charged for all readings.
3. * Output Power ☐ Conducted ☐ EIRP ☒ ERP
   * Provided by GE Medical
4. SAR Measurement System ☐ SPEAG ☒ IDX
5. SAR Configuration ☐ Head ☒ Body ☐ Hand

Randy Ortanez
President & Chief Engineer

**Fig. 9**
**Body SAR Test Setup**

## 13.1 SAR TEST EQUIPMENT

| Type / Model | Calib. Date | S/N: |
|---|---|---|
| PCTEST Robot Arm | Jan. 01 | PCT482 |
| PCTEST Computer<br>200 MHz Pentium Pro<br>Windows NT | Jan. 01 | PCT480 |
| Robot Controller | Jan. 01 | PCT464 |
| Teach Pendant (Joystick) | Jan. 01 | PCT467 |
| Phantom Head Model (Right) | Jan. 01 | PCT484 |
| Phantom Head Model (Left) | Apr. 01 | PCT497 |
| Muscle Equivalent Matter (800MHz) | May. 01 | PCTMEM12 |
| E-Field Probe | Feb. 01 | PCT486A |
| E-Field Probe | May 01 | PCT486B |
| HP Spectrum Analyzer | Dec. 00 | PCT200 |
| IFI TEM Cell Model: CC110EXX<br>(DC - 2000 MHz) | Jan. 01 | A427-0697 |
| Microwave Amp. Model: 5S1G4 | Jan. 01 | 22332 |
| (800MHz - 4.2GHz, 5 Watts) | | |
| Non-metallic Handset Tripod | | PCT487 |

NOTE:
The SAR calibration of the E-field probe is performed by temperature measurement procedure. A TEM cell is used for the free space calibration of the probe. The brain simulating material is calibrated by PCTEST using the dielectric probe system and network analyzer to determine the conductivity and permittivity (dielectric constant) of the brain-equivalent material.

The following list of equipment was used to calibrate the system (from IDX):

| | |
|---|---|
| Power Meter | HP-437B |
| RF Generator | HP-8657B |
| Power Amp | Power System Technology (Amplifier Research) |
| TEM cell | IFI CC-110 |
| Network Analyzer | HP-8753C |

# 14.1 CONCLUSION

The SAR measurement indicates that the EUT complies with the RF radiation exposure limits of the FCC. These measurements are taken to simulate the RF effects exposure under worst-case conditions. Precise laboratory measures were taken to assure repeatability of the tests.

Please note that the absorption and distribution of electromagnetic energy in the body are very complex phenomena that depend on the mass, shape, and size of the body, the orientation of the body with respect to the field vectors, and the electrical properties of both the body and the environment. Other variables that may play a substantial role in possible biological effects are those that characterize the environment (e.g. ambient temperature, air velocity, relative humidity, and body insulation) and those that characterize the individual (e.g. age, gender, activity level, debilitation, or disease). Because innumerable factors may interact to determine the specific biological outcome of an exposure to electromagnetic fields, any protection guide shall consider maximal amplification of biological effects as a result of field-body interactions, environmental conditions, and physiological variables.[3]

## REFERENCES:

[1] Federal Communications Commission, ET Docket 93-62, *Guidelines for Evaluating the Environmental Effects of Radiofrequency Radiation,* Aug. 1996.

[2] ANSI/IEEE C95.1 - 1991, *American National Standard safety levels with respect to human exposure to radio frequency electromagnetic fields, 300kHz to 100GHz*, New York: IEEE, Aug. 1992

[3] ANSI/IEEE C95.3 - 1991, *IEEE Recommended Practice for the Measurement of Potentially Hazardous Electromagnetic Fields - RF and Microwave*, New York: IEEE, 1992.

[4] NCRP, National Council on Radiation Protection and Measurements, *Biological Effects and Exposure Criteria for RadioFrequency Electromagnetic Fields*, NCRP Report No. 86, 1986. Reprinted Feb. 1995.

[5] CENELEC CLC/SC111B, European Prestandard (prENV 50166-2), *Human Exposure to Electromagnetic Fields High-Frequency: 10kHz-300GHz*, Jan. 1995.

[6] V. Hombach, K. Meier, M. Burkhardt, E. Kuhn, N. Kuster, *The Dependence of EM Energy Absorption upon Human Head Modeling at 900 MHz*, IEEE Transaction on Microwave Theory and Techniques, vol. 44 no. 10, Oct. 1996, pp. 1865-1873.

[7] N. Kuster and Q. Balzano, *Energy absorption mechanism by biological bodies in the near field of dipole antennas above 300MHz*, IEEE Transaction on Vehicular Technology, vol. 41, no. 1, Feb. 1992, pp. 17-23.

[8] Q. Balzano, O. Garay, T. Manning Jr., *Electromagnetic Energy Exposure of Simulated Users of Portable Cellular Telephones*, IEEE Transactions on Vehicular Technology, vol. 44, no.3, Aug. 1995.

[9] G. Hartsgrove, A. Kraszewski, A. Surowiec, *Simulated Biological Materials for Electromagnetic Radiation Absorption Studies*, University of Ottawa, Bioelectromagnetics, Canada: 1987, pp. 29-36.

# ATTACHMENT – EXTERNAL PHOTOGRAPHS

© 2001 PCTEST Lab

RA
LA
V(1-6)
RL
LL
FCC ID: OU5418500

Graph
Verify Leads
ApexPro
marquette

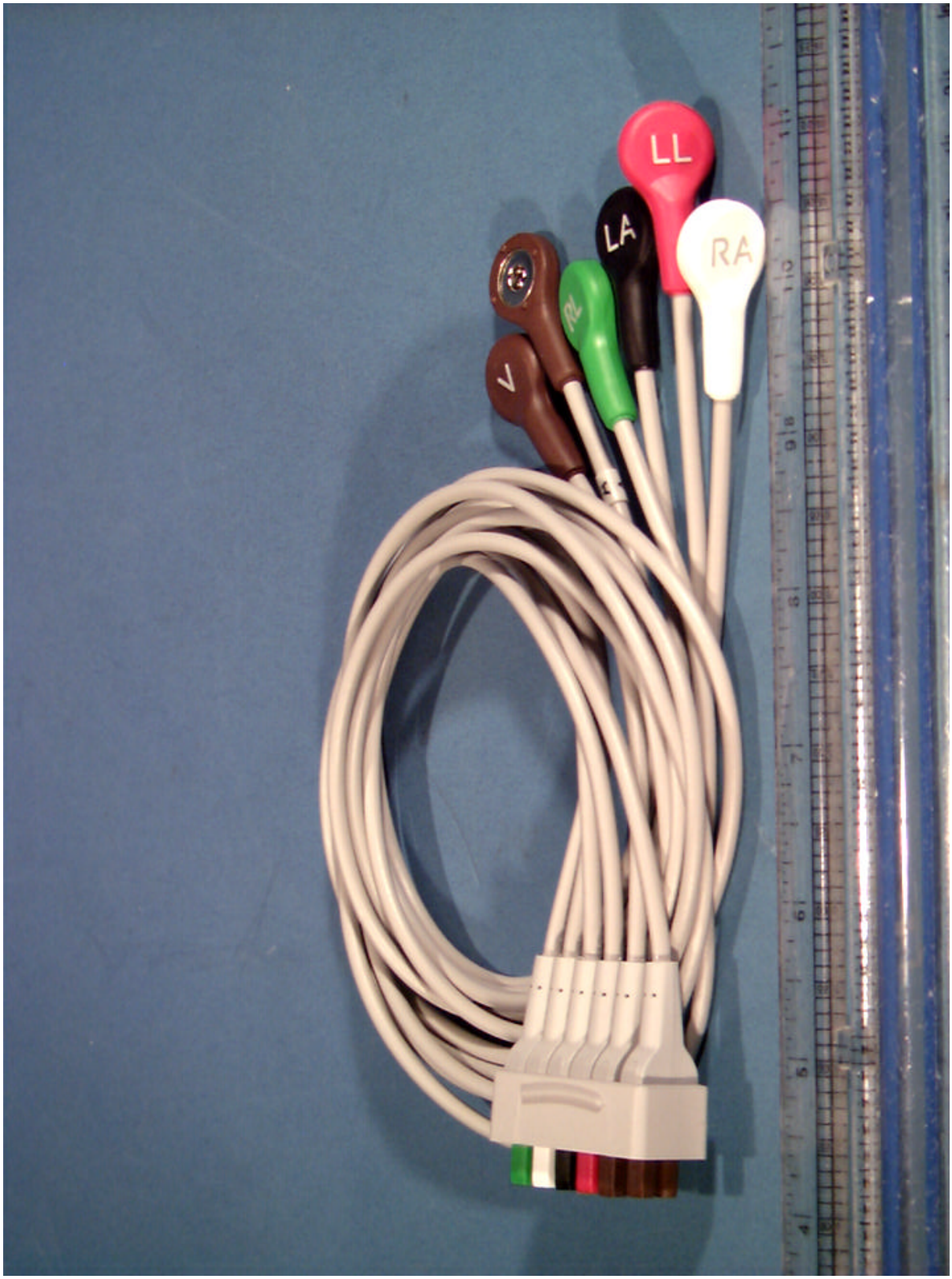
LL
LA
RA
V

INTFC.
V6
V5
LL
LA
RA
RL
RA
LA
RL
LL
I
II
III
V(1-6)
D1TT26160
MILWAUKEE WI USA
FCC ID: OU5418500

RL
RA
LA
LL
Va
Vb
Change Battery
Verify Leads
Pause Alarm
Graph
ApexPro
Telemetry
marquette

# ATTACHMENT O – SAR TEST DATA

© 2001 PCTEST Lab

# Peak SAR Location

Body SAR

File : c:/idx3/SYSTEM/SARMEAS3/data/Normal/01050725_ZOOM.VLT
Start : 7-May-101 05:42:50 pm End : 7-May-101 05:53:34 pm

Radio Type : GE
Model Number : APEXPRO
Serial Number : 5G
Frequency : 608.025 MHz
Peak Trans. Pwr : 0.001 W
Start Trans. Pwr: 0.001 W
Antenna Type : Helical
Antenna Posn. : Internal
Phantom Type : Body
Phantom Posn. : Abdomen
Scan Type : ZOOM/SAR
Probe Name : PCTEST
Field Type : E Field
Orientation : 0 Degrees

Mixture Type = Muscle
Mixture Dielectric Constant = 51.700
Mixture Conductivity = 1.100

Comment :
GE APEXPRO GMSK TELEMETRY SYSTEM
TTX# 8521
GE APEXPRO GMSK TELEMETRY SYSTEM

Robot : PCTEST

Probe Offset = 0.25 cm
Sensor Factor = 0.0108
Conversion Factor = 0.894

PCTEST Amplifier Channel Settings : 0.166 0.135 0.132

Max Location : X = -2.000, Y = -0.750, Z = 0.000 (cm) Value = 1.711

Measured Values (volts) =

| | | | | | |
|---|---|---|---|---|---|
| 1.727E-003 | 1.722E-003 | 1.724E-003 | 1.731E-003 | 1.724E-003 | 1.714E-003 |
| 1.704E-003 | 1.702E-003 | 1.702E-003 | 1.701E-003 | 1.698E-003 | 1.698E-003 |
| 1.694E-003 | 1.683E-003 | 1.675E-003 | 1.654E-003 | 1.626E-003 | 1.547E-003 |
| 1.525E-003 | 1.521E-003 | 1.543E-003 | | | |

Calc. Voltage @ Surface (Vs) = 0.0017

Voltage @ 1.00 cm (Vt) = 0.0017

Ave. Voltage (Vs+Vt)/2 = 0.0017

Ave. SAR over 1 g (mW/g) = 0.1432

SAR Scan
File : 01050725_ZOOM
Start : 7-May-101 05:42:50 pm End : 7-May-101 05:53:34 pm
GE/APEXPRO/5G;608.025MHz;W;Helical/Internal;
Body/Abdomen;ZOOM/SAR;PCTEST/E Field/0 DegreesMuscle/51.700/1.100

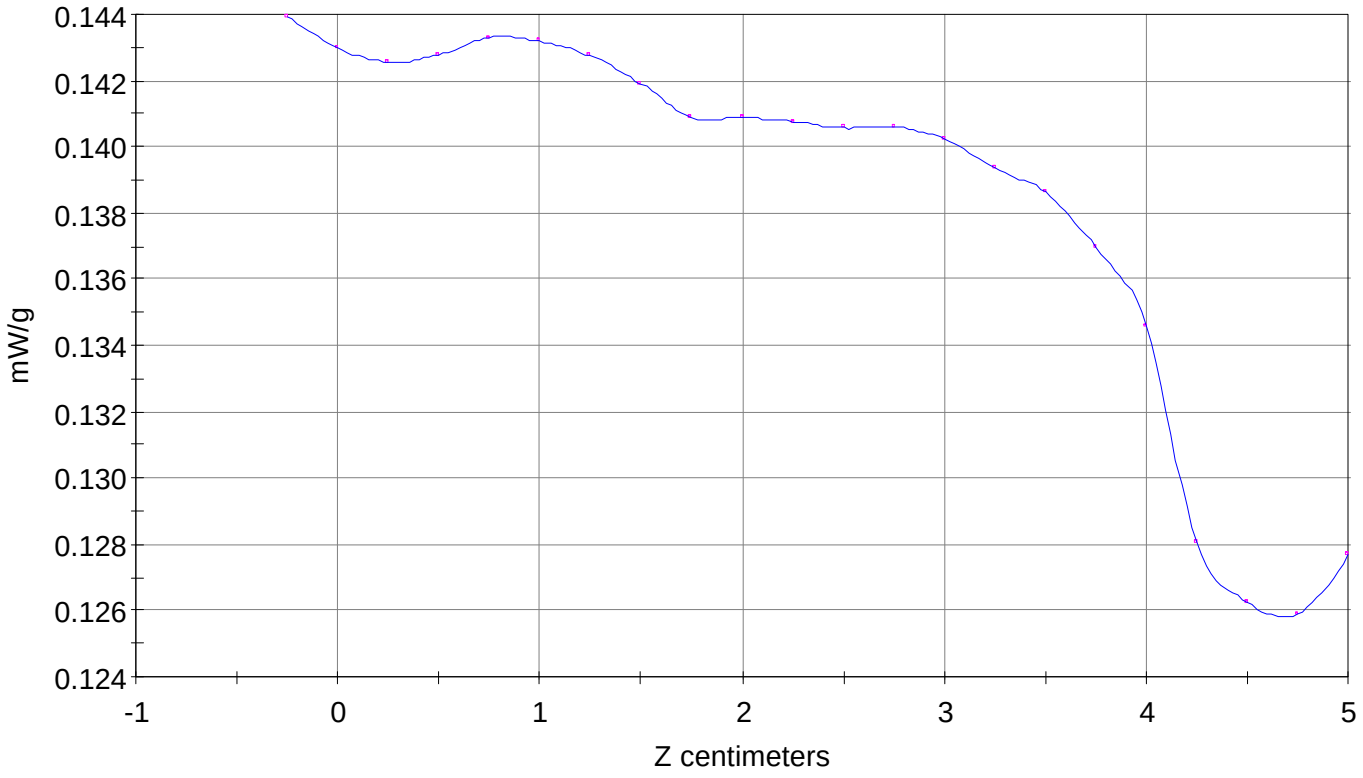

File : 01050725_ZOOM
Start : 7-May-101 05:42:50 pm End : 7-May-101 05:53:34 pm
GE/APEXPRO/5G;608.025MHz;W;Helical/Internal;
Body/Abdomen;ZOOM/SAR;PCTEST/E Field/0 DegreesMuscle/51.700/1.100

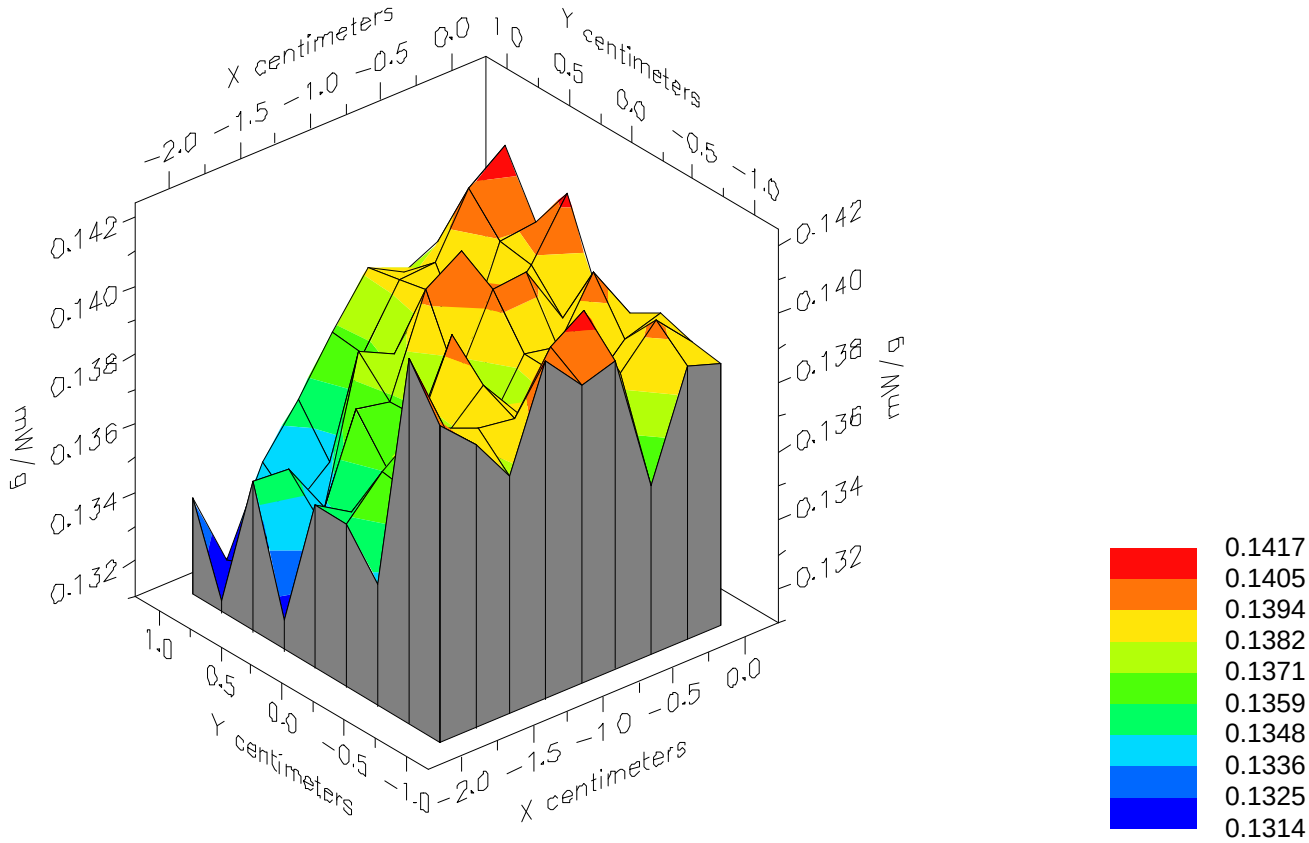

File : 01050725_ZOOM
Start : 7-May-101 05:42:50 pm End : 7-May-101 05:53:34 pm
GE/APEXPRO/5G;608.025MHz;W;Helical/Internal;
Body/Abdomen;ZOOM/SAR;PCTEST/E Field/0 DegreesMuscle/51.700/1.100

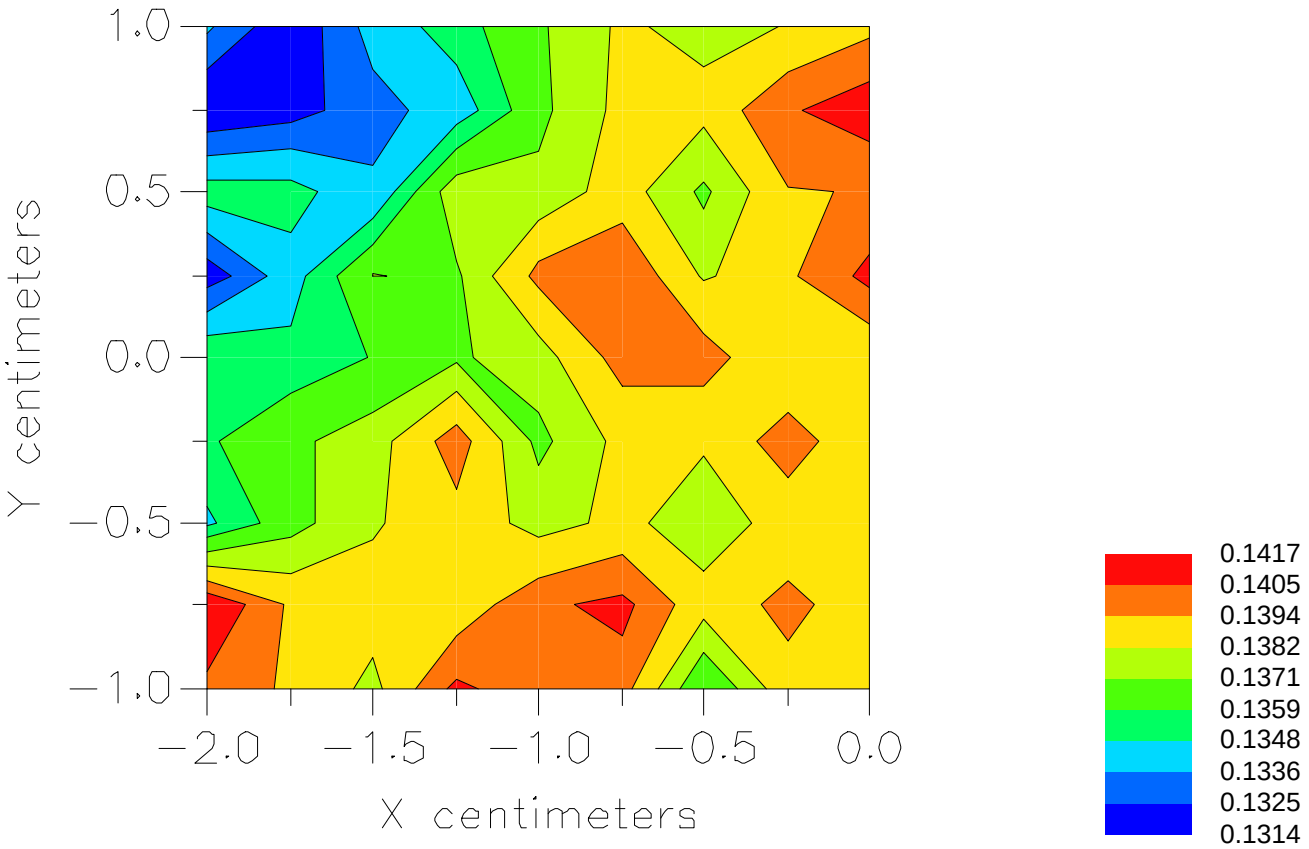

File : c:/idx3/SYSTEM/SARMEAS3/data/Normal/01050721_ZOOM.VLT
Start : 7-May-101 04:27:54 pm End : 7-May-101 04:33:13 pm

Radio Type : GE
Model Number : APEXPRO
Serial Number : 5G
Frequency : 613.975 MHz
Peak Trans. Pwr : 0.100 W
Start Trans. Pwr: 0.100 W
Antenna Type : Helical
Antenna Posn. : Internal
Phantom Type : Body
Phantom Posn. : Abdomen
Scan Type : ZOOM/SAR
Probe Name : PCTEST
Field Type : E Field
Orientation : 0 Degrees

Mixture Type = Muscle
Mixture Dielectric Constant = 51.700
Mixture Conductivity = 1.100

Comment :
GE APEXPRO GMSK TELEMETRY SYSTEM
TTX# 8759
GE APEXPRO GMSK TELEMETRY SYSTEM

Robot : PCTEST

Probe Offset = 0.25 cm
Sensor Factor = 0.0108
Conversion Factor = 0.894

PCTEST Amplifier Channel Settings : 0.166 0.135 0.132

Max Location : X = -1.000, Y = -4.500, Z = 0.000 (cm) Value = 1.773

Measured Values (volts) =

| | | | | | |
|---|---|---|---|---|---|
| 1.821E-003 | 1.791E-003 | 1.760E-003 | 1.752E-003 | 1.751E-003 | 1.769E-003 |
| 1.739E-003 | 1.739E-003 | 1.742E-003 | 1.741E-003 | 1.709E-003 | 1.696E-003 |
| 1.705E-003 | 1.706E-003 | 1.627E-003 | 1.642E-003 | 1.596E-003 | 1.628E-003 |
| 1.582E-003 | 1.600E-003 | 1.582E-003 | | | |

Calc. Voltage @ Surface (Vs) = 0.0017

Voltage @ 1.00 cm (Vt) = 0.0017

Ave. Voltage (Vs+Vt)/2 = 0.0017

Ave. SAR over 1 g (mW/g) = 0.1421

SAR Scan
File : 01050721_ZOOM
Start : 7-May-101 04:27:54 pm End : 7-May-101 04:33:13 pm
GE/APEXPRO/5G;613.975MHz;W;Helical/Internal;
Body/Abdomen;ZOOM/SAR;PCTEST/E Field/0 DegreesMuscle/51.700/1.100

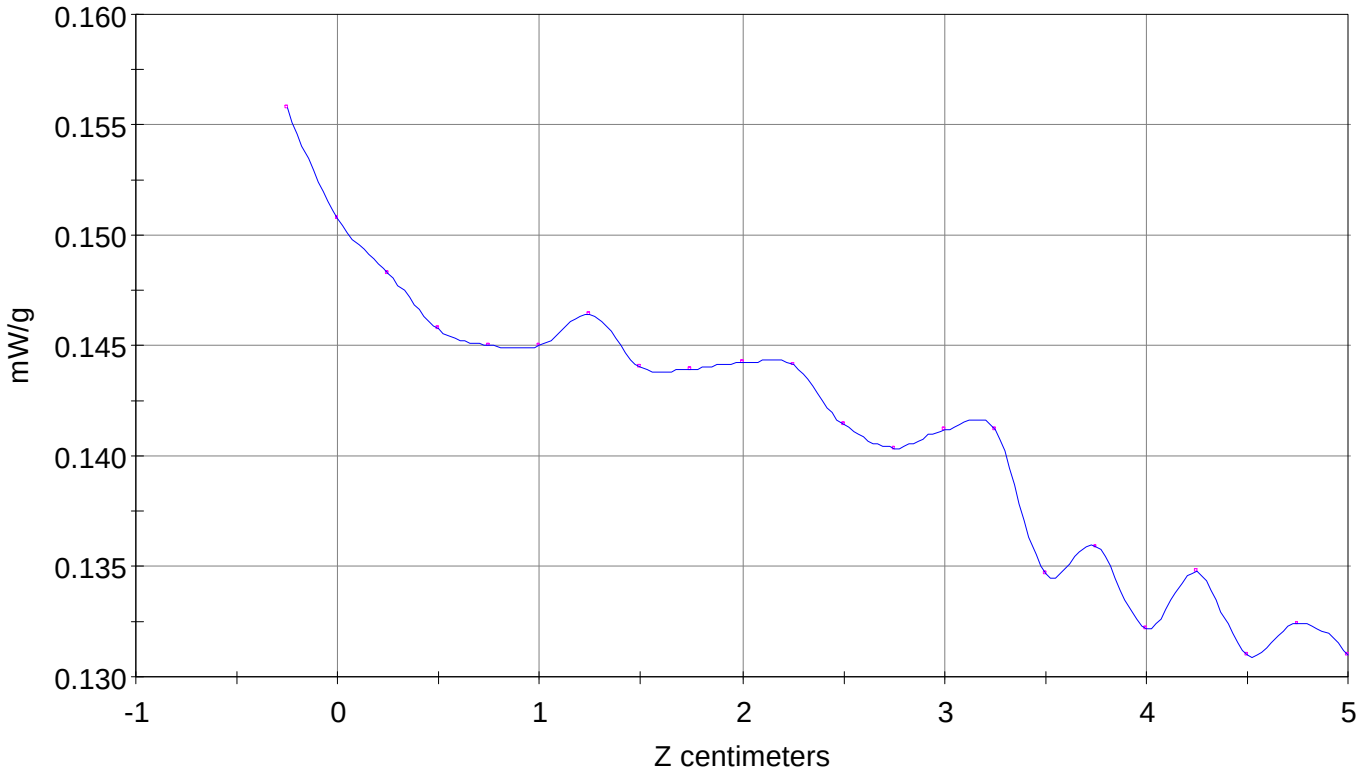

File : 01050721_ZOOM
Start : 7-May-101 04:27:54 pm End : 7-May-101 04:33:13 pm
GE/APEXPRO/5G;613.975MHz;W;Helical/Internal;
Body/Abdomen;ZOOM/SAR;PCTEST/E Field/0 DegreesMuscle/51.700/1.100

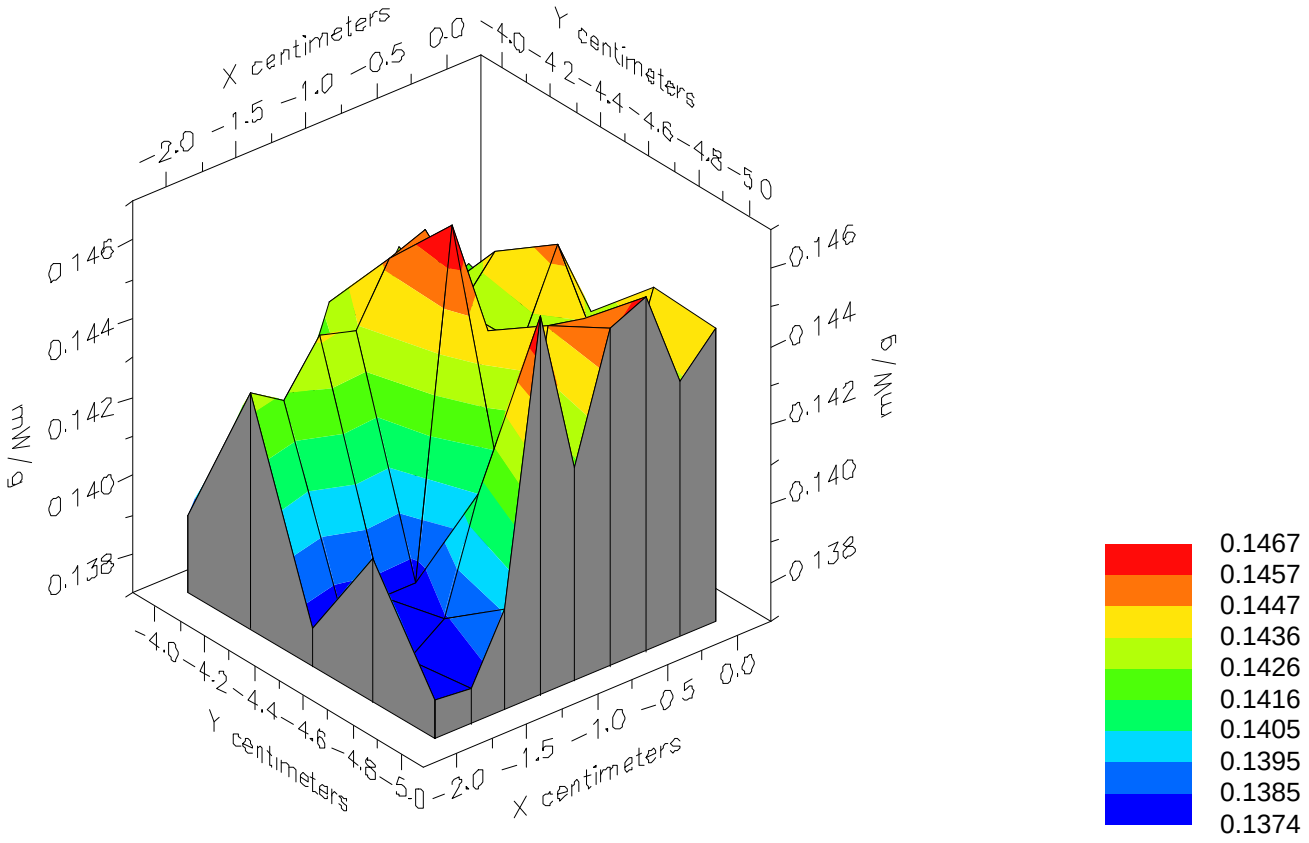

File : 01050721_ZOOM
Start : 7-May-101 04:27:54 pm End : 7-May-101 04:33:13 pm
GE/APEXPRO/5G;613.975MHz;W;Helical/Internal;
Body/Abdomen;ZOOM/SAR;PCTEST/E Field/0 DegreesMuscle/51.700/1.100

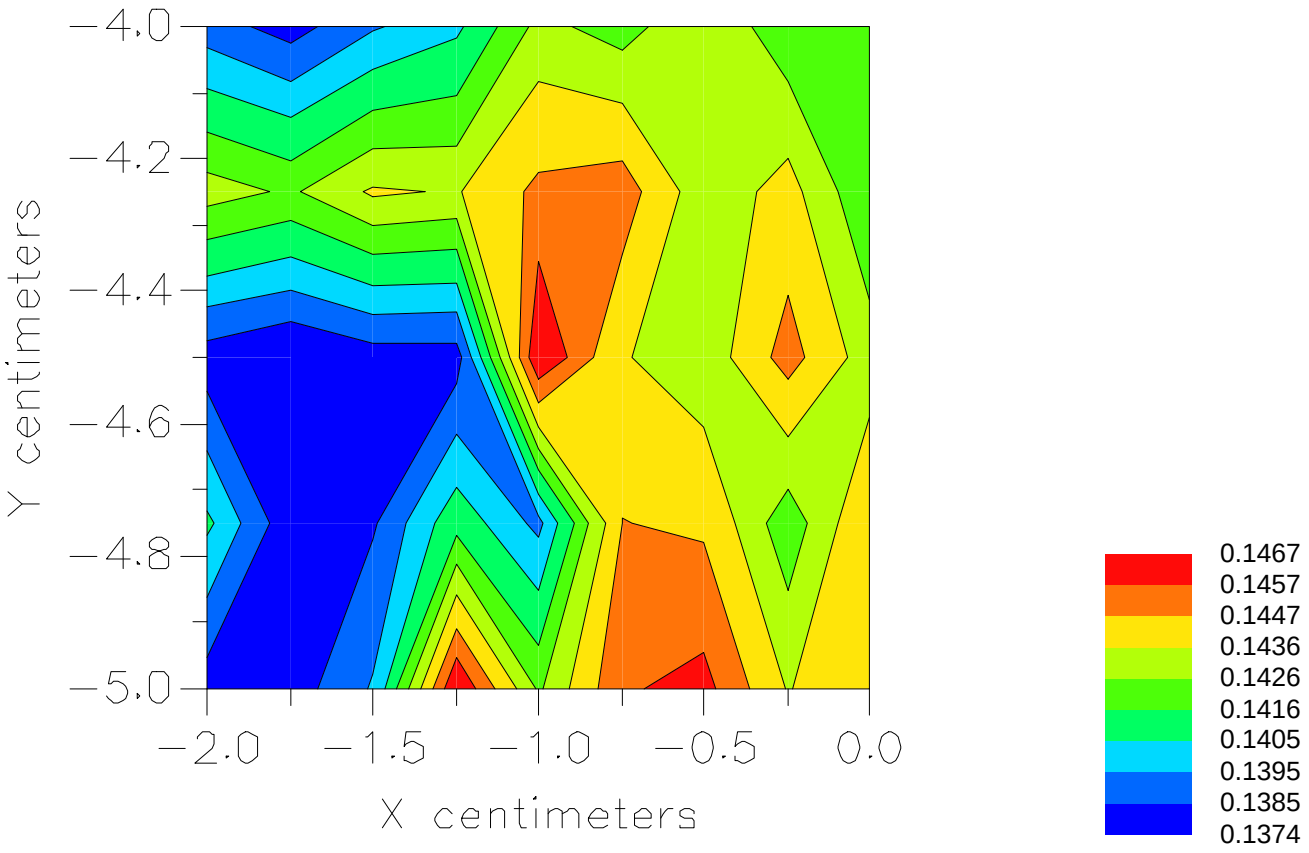

# ATTACHMENT P – SAR TEST SETUP PHOTOGRAPHS

© 2001 PCTEST Lab

COMPANY NAME:
GE
MODEL: APEXPRO
FCC ID: OU5418500
TYPE: WIRELESS MEDICAL
TELEMETRY DEVICE
PCTEST

COMPANY NAME:
GE
MODEL:
FCC ID: OU5
TYPE: WIRE
TELEM

PCTEST
ApexPro
marquette