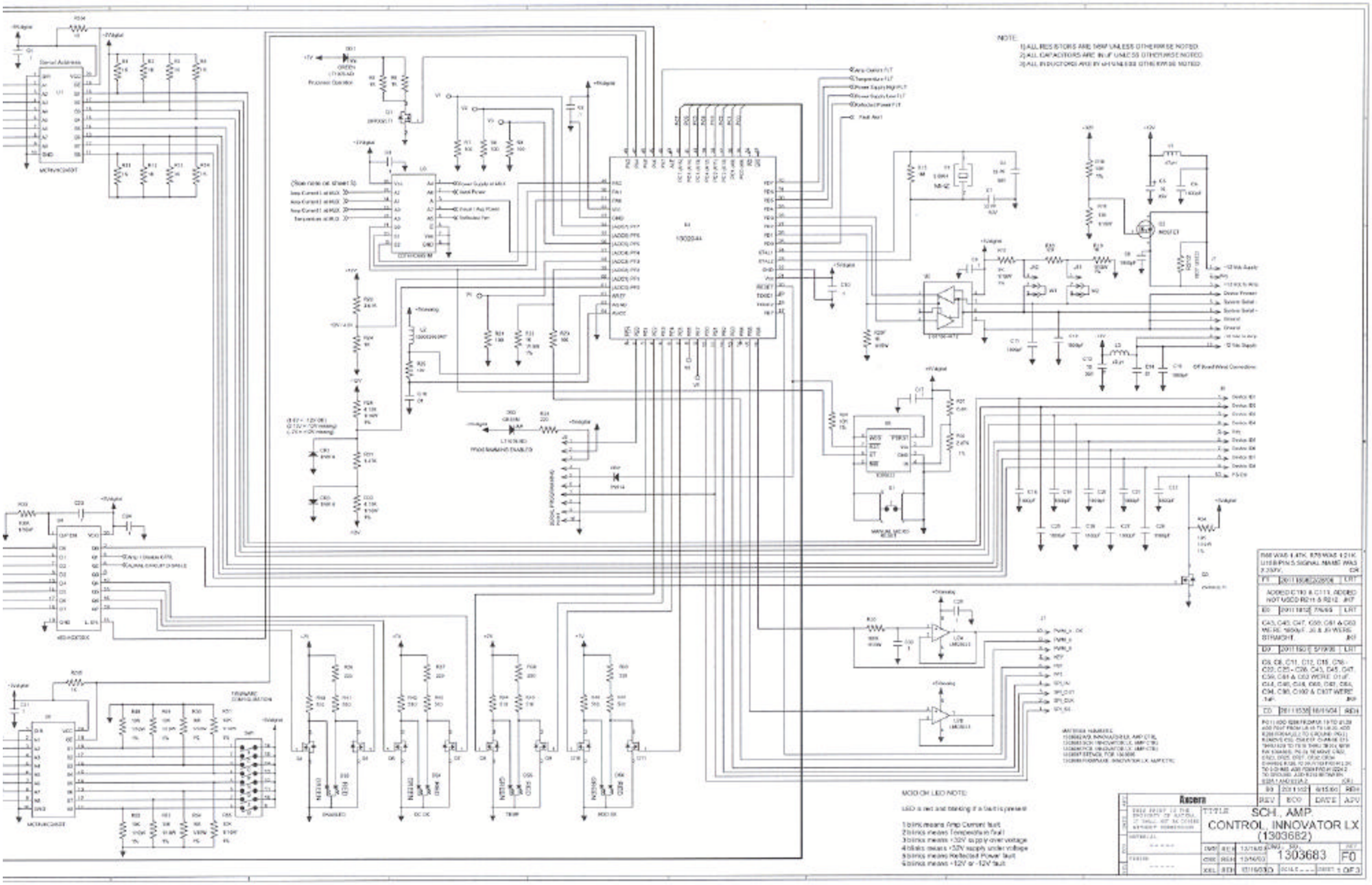
NOTE:
1) ALL RESISTORS ARE 1MW UNLESS OTHERWISE NOTED.
2) ALL CAPACITORS ARE IN uF UNLESS OTHERWISE NOTED.
3) ALL INDUCTORS ARE IN uH UNLESS OTHERWISE NOTED.
MOD OH LED NOTE:
LED is red and blinking if a fault is present
1 blink means Amp Current fault
2 blinks means Temperature fault
3 blinks means +32V supply over voltage
4 blinks means +32V supply under voltage
5 blinks means Reflected Power fault
6 blinks means +12V or -12V fault
Ascera
TITLE
SCH., AMP.
CONTROL, INNOVATOR LX
(1303683)
1303683
F0

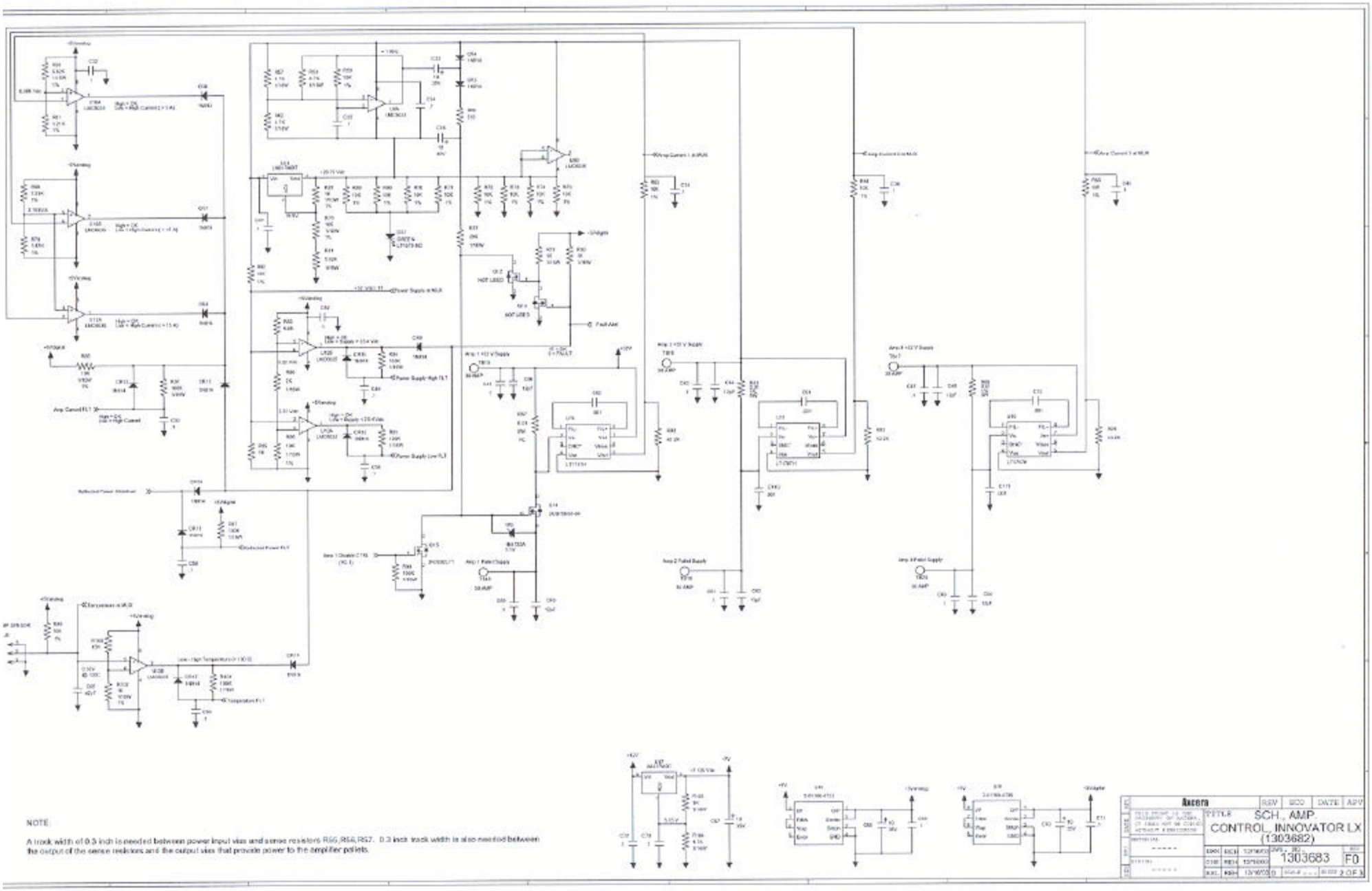

NOTE:

A track width of 0.3 inch is needed between power input vias and sense resistors RS6,RS4,RS7. 0.3 inch track width is also needed between the output of the sense resistors and the output vias that provide power to the amplifier pallets.

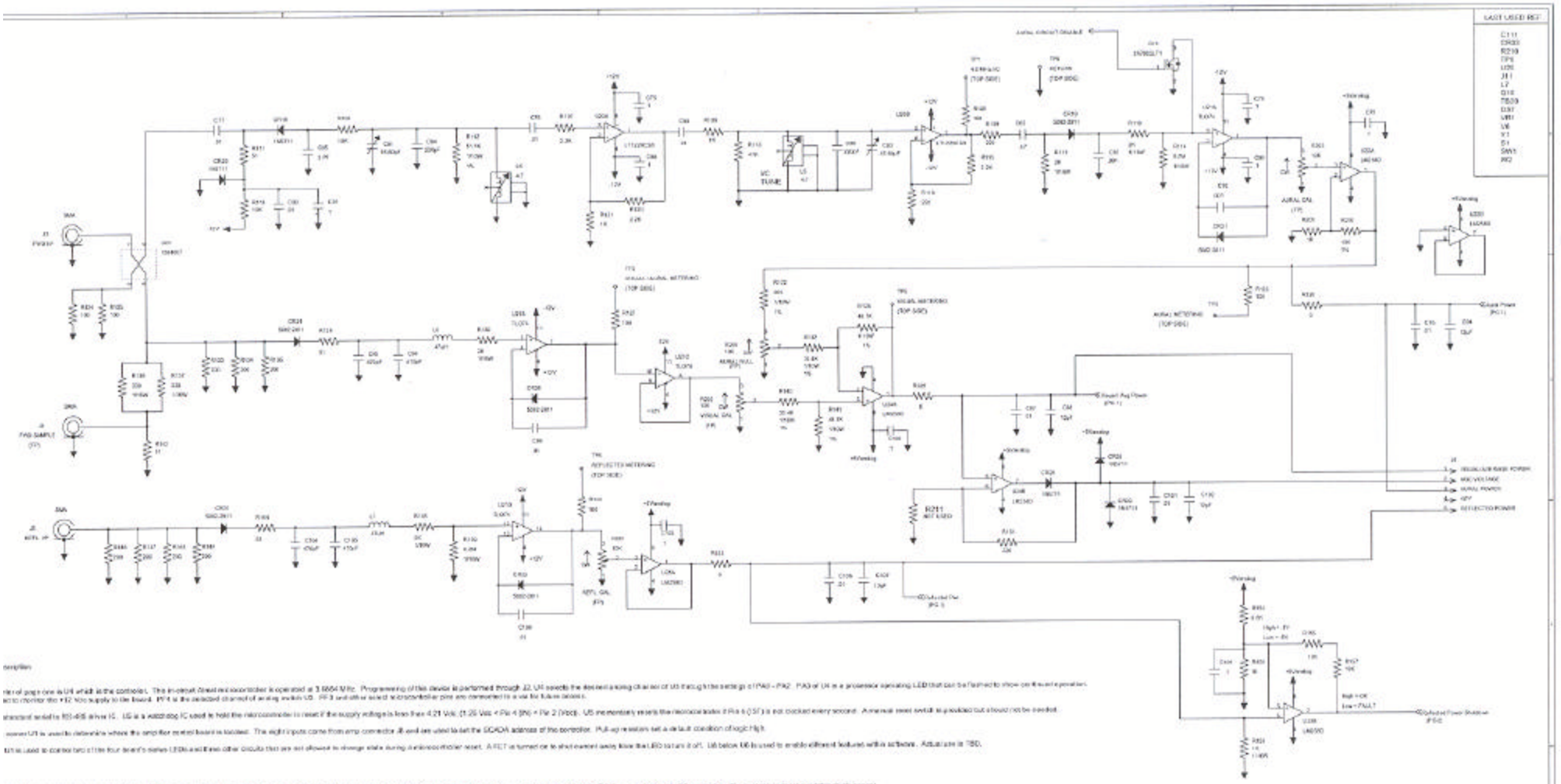

amplifier

ntrol page one is U4 which is the controller. The in-circuit Atmel microcontroller is operated at 3.6864 MHz. Programming of this device is performed through J2. U4 selects the element analog channel or U5 through the settings of PA0 – PA2. PA3 of U4 is a processor operating LED that can be flashed to show certain operation. ect to monitor the +12 Vdc supply to the board. PF4 is the selected channel of analog switch U5. PF3 and other select microcontroller pins are connected to a via for future needs.

standard serial to RS-485 drive IC. U6 is a watchdog IC used to hold the microcontroller in reset if the supply voltage is less than 4.21 Vdc (1.25 Vdc < Pin 4 (IN) < Pin 2 (Vcc)). U5 momentarily resets the microcontroller if Pin 6 (CS) is not pulled every second. A manual reset switch is provided but should not be needed.

ressor U1 is used to determine where the amplifier control board is located. The eight inputs come from amp connector J8 and are used to set the SCADA address of the controller. Pull-up resistors set a default condition of logic high.

U16 is used to control two of the four board's status LEDs and three other circuits that are not allowed to change state during a microcontroller reset. A FET is turned on to shut current away from the LED to turn it off. U6 below U6 is used to enable different features within software. Actual size is TBD.

ne right corner are voltage regulator circuits. U17 should allow for 0.75 amps of power using its 92 C/W rating if Ta = 40 C max and Tj = 135C max. 0.26 amps can be obtained from U17 if the mounting pad is 0.5 sqr. inches. The controller will not need this much current.

U19 are low drop-out voltage regulators with a tolerance greater than or equal to 1%. 150 mA is available from each device but again the controller will not need this much current.

ne left section are circuits with U1 and U11. U11 is used to generate a regulated voltage that is about 5 Volts less than the +32 Volt supply. When the +32 Volt supply is enabled, the circuitry around U5A is used to provide gate voltage to Q14 that is 5 volts greater than the source pin of this FET. The gate of Q14 can be turned off by any one of a few circuits. These circuits are wired through Q12 and Q13. At the base these transistors are not terminated but they may be wired to increase the shutdown time on a detected fault. Without Q12 and Q13 installed, Q14 is only turned off by the microcontroller through Q16.

used to detect high current in amplifier #1. At 0.660 Vdc, the current to amplifier #1 should be about 5.12 Amps. U10B and U12A are used to detect a high current condition in amplifier stages #2 or #3. With a 2.26 Vdc reference, high current alarm should be about 10.1 Amps.

used to detect high power supply voltage. U13A is used to indicate that the power supply voltage is less than 26 volts.

ange 3 is used to detect high reflected power. U13B determines if the power supply temperature gets too hot.

Sensing Sections - A 0.01 ohm 1%, 5 Watt thick film resistor is used for monitoring the current through several sections of the amplifier. The voltage developed across this resistor is amplified for current monitoring by U14, U15, or U16. The Linear Technology LT1787HV/D50 precision high side current sense amplifier accepts a maximum voltage of 60 Vdc. Kelvin sensing from Pin 3 to ground sets the gain of the amplifier is about 17.24. This value is not set with much accuracy since the manufacture internal matches the resistors of this part but their actual resistance value is not closely defined. A trimming resistor is suggested to give a temperature stability of -200ppm/C but instead the microcontroller will determine the actual gain of the it uses a correction factor for measurements.

radiator circuits. Q16 is used by the microcontroller to disable the audio circuit of a digital transmitter or to external amplifiers whose the amplifier is not to monitor visual power.

ed or forward power meter is evaluated and presented on the input of U24D pin 5. If this module has the highest detected forward power in a multi-amplifier system, it will have the highest forward signal. This signal level also U26B pin 5 will be used to set the ACC output voltage of J4-2. If another amplifier has a higher forward power, the level into U24D pin 6 will be higher than pin5 negative output signal will not be used to set the voltage level of J8-2.

Axcera		REV	ECO	DATE	APV
THIS DRAWING IS THE PROPERTY OF AXCERA, IT MAY NOT BE COPIED WITHOUT PERMISSION	TITLE SCH., AMP. CONTROL, INNOVATOR LX (1303682)				
MATERIAL - - - - -	DWN RLH 12/16/03	DWG NO 1303683			REV F0
FINISH - - - - -	CHK RLH 12/16/03				
	SCL RLH 12/16/03	SCALE - - -			SHEET 3 OF 3

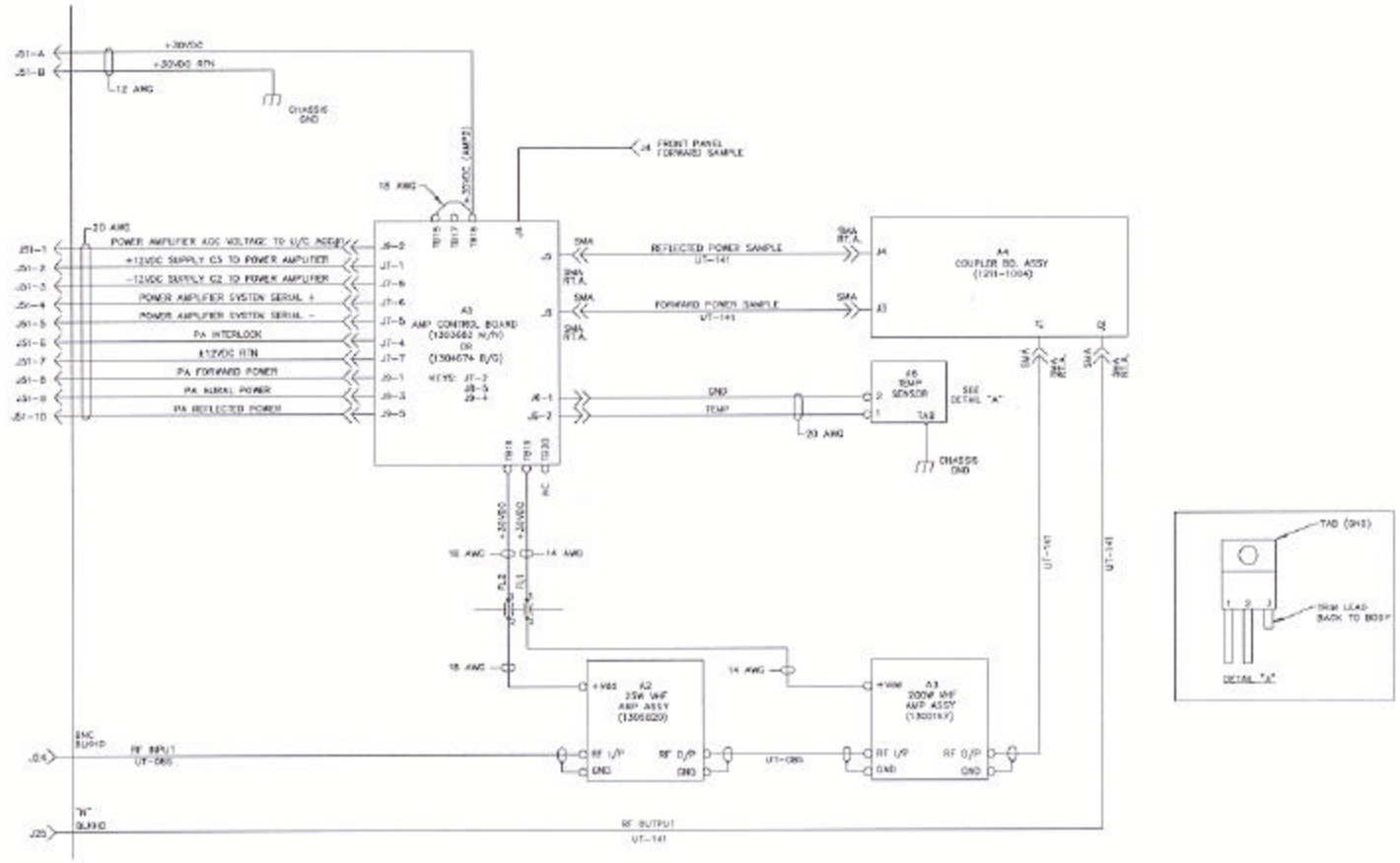

NOTE:
1. ALL WIRE IS 18AWG UNLESS OTHERWISE NOTED.

REV	DESCRIPTION	DATE	APV
B0	ADDED WIRE BETWEEN J51-9 AND A3-J9-3. RD	6/2/05	JCM

Axcera.

THIS DRAWING IS THE PROPERTY OF AXCERA, IT SHALL NOT BE COPIED WITHOUT PERMISSION.

MATERIAL ------

FINISH ------

TITLE I/C, PA ASSEMBLY, 50W HB VHF DTV

DWN	RGE	03/18/05	
CHK	LRT	04/15/05	
REL	LRT	04/15/05	D

DWG NO. 1305823 REV B0

SCALE ---- SHEET 1 OF 1