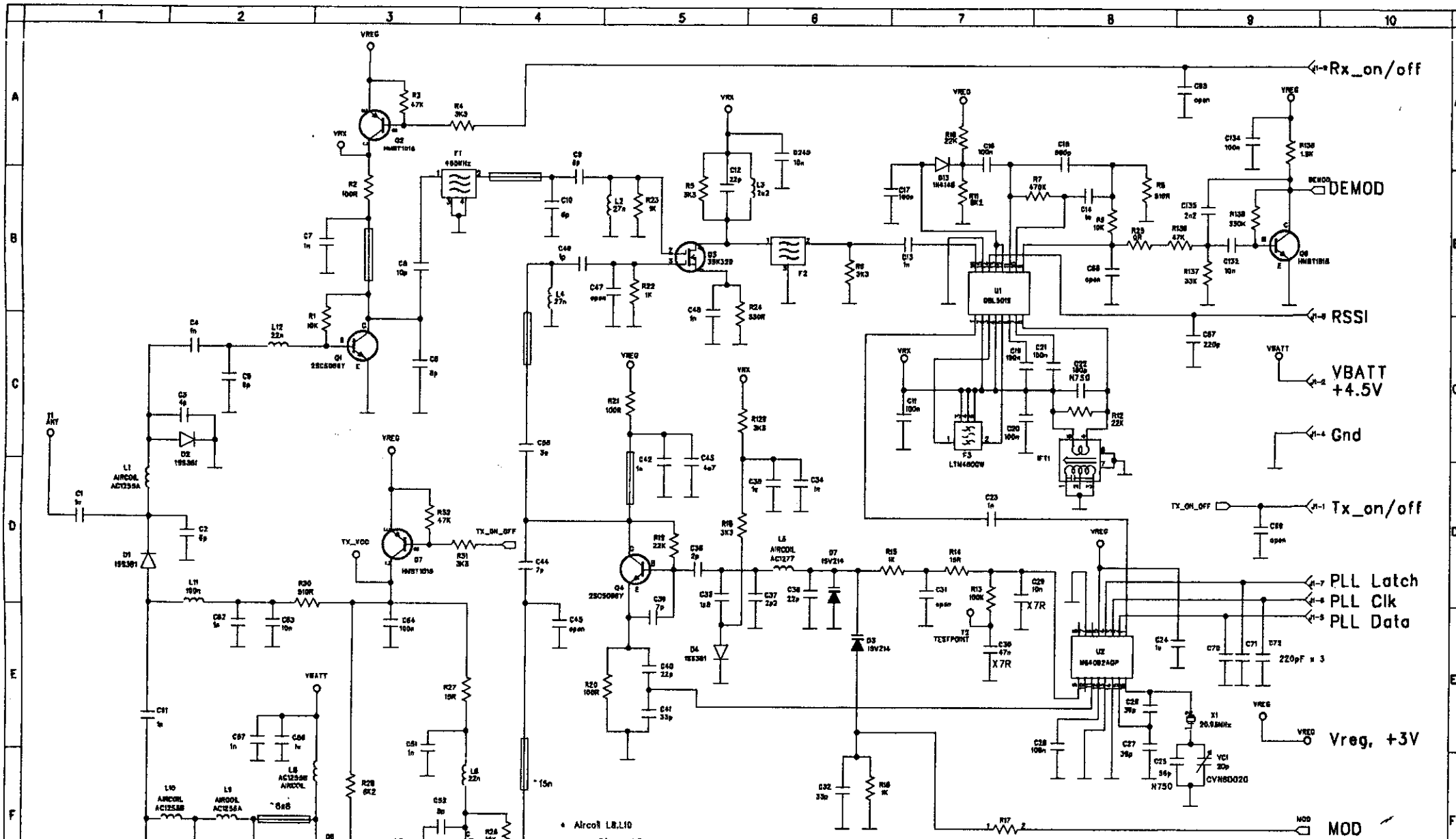
Rx_on/off
DEMOD
RSSI
VBATT
+4.5V
Gnd
Tx_on/off
PLL Latch
PLL Clk
PLL Data
Vreg, +3V
MOD
VREG
VRX
VBATT
TX_ON_OFF
TX_VCC
ANT
F1
450KHz
F2
F3
LTM4800W
U1
U2
M64082AGP
X1
20.95MHz
YC1
CVH60020
TESTPOINT
Q1
2SC5066Y
Q2
HMBT1016
Q3
2SK329
Q4
2SC5066Y
Q5
2SC5066Y
Q6
HMBT1016
Q7
HMBT1016
Q8
BOT89
D1
1SS301
D2
1SS301
D3
1SV214
D4
1SS301
D5
1SV214
D6
1N4148
L1
AIRCOIL
AC1255A
L5
AIRCOIL
AC1277
L8
AC1258
AIRCOIL
L10
AIRCOIL
AC1258
L9
AIRCOIL
AC1256A
*6t6
*15n
R4
3K3
R5
3K3
R6
3K3
R7
470K
R8
510K
R9
10K
R14
18R
R15
1K
R16
1K
R17
22K
R18
22K
R19
22K
R20
100R
R21
100R
R22
1K
R23
1K
R24
330R
R25
3K3
R26
6K2
R27
15K
R28
10K
R29
3K3
R30
910R
R31
3K3
R32
47K
R33
10K
R34
10K
R35
10K
R36
47K
R37
33K
R38
330K
R39
1.8K
R12
22K
C12
22p
C13
1n
C14
1n
C15
900p
C16
100n
C17
100p
C18
100n
C19
100n
C20
100n
C21
150n
C22
N750
C23
1n
C24
1n
C25
56p
N750
C26
39p
C27
39p
C28
100n
C29
10n
X7R
C30
47n
X7R
C31
open
C32
33p
C33
1n8
C34
1n
C35
2n2
C36
2p
C37
2p2
C38
22p
C39
7p
C40
22p
C41
33p
C42
1n
C43
4n7
C44
7p
C45
open
C46
1p
C47
open
C48
1n
C49
10n
C50
10p
C51
1n
C52
8p
C53
open
C54
open
C55
3p
C56
7p
C57
1n
C58
1n
C59
20p
C60
20p
C61
22n
C62
1n
C63
10n
C64
100n
C65
open
C66
open
C67
220p
C68
open
C69
open
C70
220pF x 3
C71
C72
C73
C74
C75
C76
C77
C78
C79
C80
C81
1n
C82
1n
C83
open
C84
1n
C85
10p
C86
20p
C87
20p
C88
1n
C89
1n
C90
1n
C91
1n
C92
1n
C93
10n
C94
100n
C95
2n2
C96
100n
C97
1n
C98
1n
C99
1n
C100
1n
C101
1n
C102
1n
C103
1n
C104
1n
C105
1n
C106
1n
C107
1n
C108
1n
C109
1n
C110
1n
C111
1n
C112
1n
C113
1n
C114
1n
C115
1n
C116
1n
C117
1n
C118
1n
C119
1n
C120
1n
C121
1n
C122
1n
C123
1n
C124
1n
C125
1n
C126
1n
C127
1n
C128
1n
C129
1n
C130
1n
C131
1n
C132
10n
C133
100n
C134
100n
C135
2n2
C136
1n
C137
1n
C138
1n
C139
1n
C140
1n
C141
1n
C142
1n
C143
1n
C144
1n
C145
1n
C146
1n
C147
1n
C148
1n
C149
1n
C150
1n
C151
1n
C152
1n
C153
1n
C154
1n
C155
1n

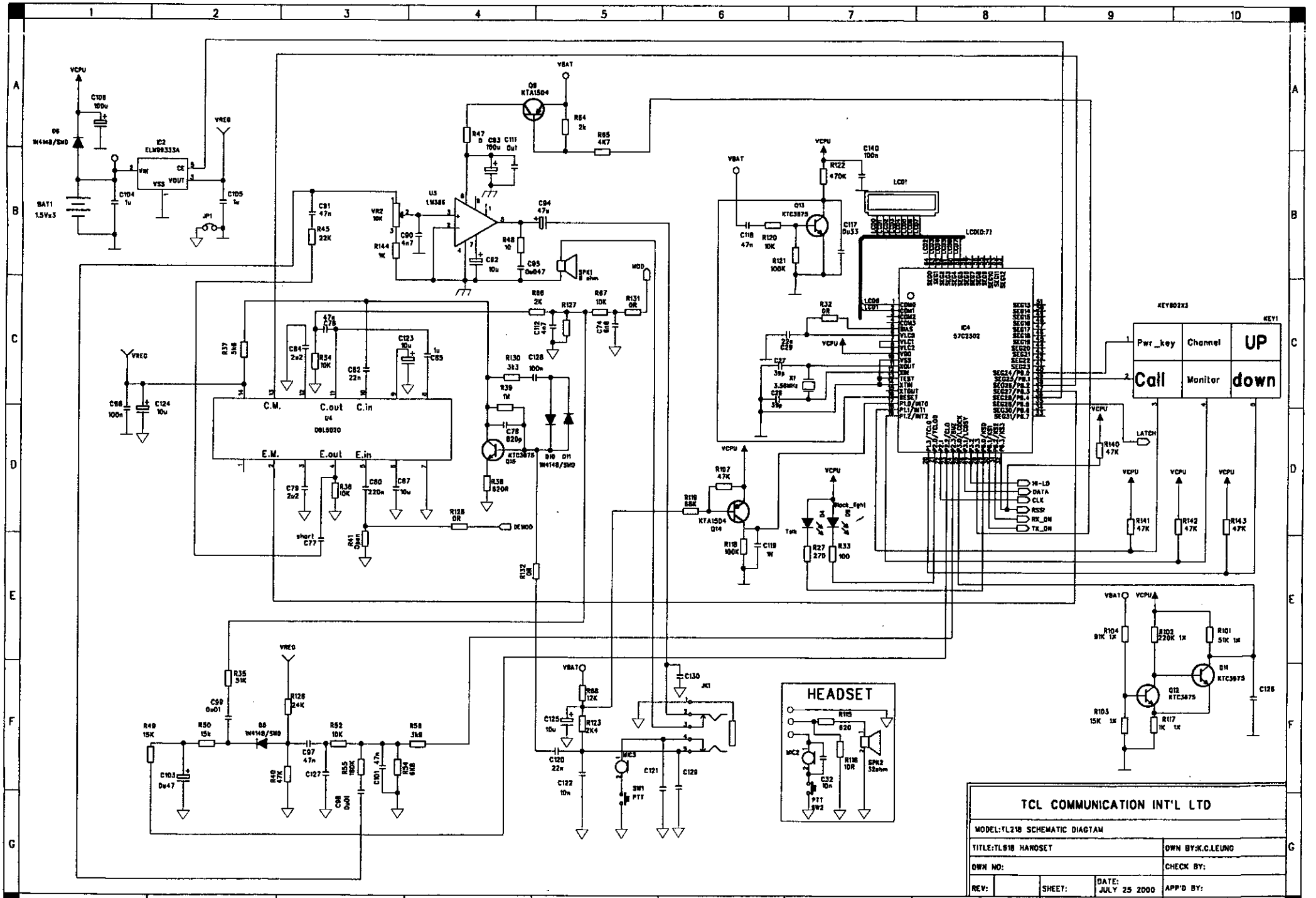
VCPU
VREG
VBAT
BAT1
1.5Vx3
IC2
ELM9333A
U3
LM386
Q8
KTA1504
Q13
KTC3875
LCD1
IC4
S7C2302
KEY802X3
KEY1
Pwr_key
Channel
UP
Call
Monitor
down
U4
D6L5020
C.M.
C.out
C.in
E.M.
E.out
E.in
Q15
KTC3875
Q14
KTA1504
HEADSET
TCL COMMUNICATION INT'L LTD
MODEL:TL218 SCHEMATIC DIAGTAM
TITLE:TL618 HANDSET
DWN BY:K.C.LEUNG
DWN NO:
CHECK BY:
REV:
SHEET:
DATE:
JULY 25 2000
APP'D BY:

(A2)