cut along dotted line to remove torn outer cover

ECOWATER SYSTEMS

SERIES 3000 & 3002

P/N: 7250818

OWNERS MANUAL

How to maintain and operate your EcoWater digital demand water system

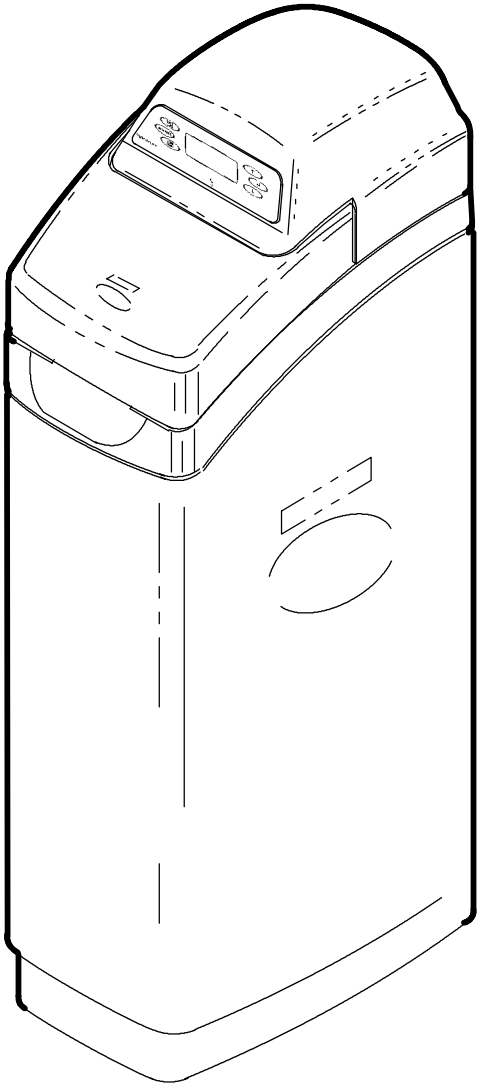

EcoWater Conditioner with Remote (ECR)
EcoWater Refiner with Remote (ERR)

SERIES
3000 & 3002

EcoWater Systems
PO Box 64420, St. Paul MN 55164-9888

PRINTED IN USA

Part No. 7250818 (Rev. D 7/19/02)

UNPACKING

EcoWater Systems conditioner models R70 and R50S are shipped from the factory in two cartons. These contain resin tank/controller assembly in one carton and the brine tank, cover, skin pack of small parts needed to assemble and install the unit, and this manual.

EcoWater Systems conditioners, models R20, R30 and R40 are shipped from the factory in 1 master carton. The carton also includes a skin pack of small parts needed to assemble and install the unit, and this manual.

Thoroughly check the EcoWater Systems conditioner for possible shipping damage and parts loss. Also inspect and note any damage to the shipping carton. Notify the transportation company if damage is present. EcoWater Systems is not responsible for in-transit damages.

Remove and discard (RECYCLE) all packing materials. We suggest you keep the small parts on the skin-pack until you are ready to use them. Minimal assembly is needed on all two tank models...see page 6.

TABLE OF CONTENTS

	Page
Warranty	3
Water / Water Conditioning	4-5
Assembly	6
Planning / Installation	7-13
1st Time Programming Face Plate Controller	14-15
Faceplate Controller Features / Options	16-22
Remote Monitor Features / Options, FCC user information	23
EcoWater Conditioner Operation	24-27
Service Information	28-34
Refilling with Salt	28
Troubleshooting	30-33
Dimensions / Specifications	35
Repair Parts	36-39

SAFETY GUIDES

Follow the installation instructions carefully. Failure to install the EcoWater Systems conditioner properly **voids the warranty.**

Before you begin installation, read this entire manual. Then, obtain all the materials and tools you will need to make the installation.

Check local plumbing and electrical codes. The installation must conform to them.

Use only lead-free solder and flux for all sweat-solder connections, as required by state and federal codes.

Use care when handling the EcoWater Systems conditioner. Do not turn upside down, drop, or set on sharp protrusions.

Do not locate the EcoWater Systems conditioner where freezing temperatures occur. Do not attempt to treat water over 120°F. **Freezing, or hot water damage voids the warranty.**

Avoid installing in direct sunlight. Excessive sun heat may cause distortion or other damage to non-metallic parts.

The EcoWater Systems conditioner requires a minimum water flow of 3 gallons per minute at the inlet. **Maximum allowable inlet water pressure is 125 psi.** If daytime pressure is over 80 psi, nighttime pressure may exceed the maximum. Use a pressure reducing valve if necessary. (Adding a pressure reducing valve may reduce the flow.)

The EcoWater Systems conditioner works on 24 volt-60 hz electrical power only. Be sure to use the included transformer.

This device complies with Part 15 of the FCC Rules. Operation is subject to the following two conditions: (1) this device may not cause harmful interference, and (2) this device must accept any interference received, including interference that may cause undesired operation. Changes or modifications not expressly approved by the party responsible for compliance could void the user's authority to operate the equipment.

This system is not intended to be used for treating water that is microbiologically unsafe or of unknown quality without adequate disinfection before or after the system.

LIMITED WARRANTY

EcoWater Systems, Inc.
Advantage Warranty
Series ECR & ERR 3000 Water System

Congratulations! You have just purchased the highest quality water conditioning product on the market. To register your warranty, complete the enclosed Warranty Registration Card and mail it within 30 days of purchase.

To whom is this warranty extended?

EcoWater Systems, Inc. warrants its products to the original owner and guarantees that the products will be free from defects in materials and workmanship from the original date of installation.

How does my warranty work?

If, during the respective warranty period, a part proves, after inspection by EcoWater, to be defective, EcoWater will, at its sole option repair or replace that part at no charge, other than normal shipping, installation or service charges.

What is covered by the warranty?

EcoWater Systems, Inc. guarantees that,

for the LIFETIME of the original owner, the SALT TANK and the MINERAL TANK will not rust, corrode, leak, burst, or in any other manner fail to perform their proper functions and that,

for a period of TEN YEARS, the VALVE BODY will be free of defects in materials and workmanship and will perform its proper function and that,

for a period of FIVE YEARS, the ELECTRONIC FACEPLATE and ALL OTHER PARTS, including the REMOTE MONITOR will be free of defects in materials and workmanship and will perform their normal functions.

Only on models designated as ERR on the rating decal, the EcoLife ™ resin is also guaranteed, for the lifetime of the original owner, to be free of defects in materials and workmanship and to remove chlorine form a municipal water supply.

How do I obtain warranty service?

Should you need service, your local, independent EcoWater Dealer is only a phone call away.
PHONE: _____

To obtain warranty service, notice must be given, within thirty (30) days of the discovery of the defect, to your local EcoWater Systems dealer.

If I need a part replaced after the factory warranty expires, is the replacement part warranted?

Yes, EcoWater Systems, Inc. warrants FACTORY REPAIRS as well as all REPLACEMENT PARTS for a period of 90 DAYS. This warranty does not include normal shipping, installation or service charges.

Are any additional warranties available?

We are pleased to say, YES! EcoWater Systems, Inc. sells an EXTENDED, PARTS ONLY WARRANTY for the ELECTRONICS portion of your product. This warranty is called the "Perfect Ten" and extends the five year warranty on the electronic FACEPLATE, WIRING HARNESS, DRIVE MOTOR, TRANSFORMER, POWER CORD, SENSOR HOUSING, and MICRO SWITCHES to a total of TEN YEARS from the date of original installation. Your local dealer will provide details regarding this warranty or will refer you to the factory for additional information.

In addition, the 3000 SERIES product carries the CREST OF EXCELLENCE GUARANTEE that, should you experience a repetitive problem that remains uncorrected, EcoWater will, during the FIRST YEAR OF INSTALLATION, replace the product with the exact or comparable product.* This guarantee may be subject to normal shipping and installation or service charges.

General Provisions

The above warranties are effective provided the water conditioner is operated at water pressures not exceeding 125 psi, and at water temperatures not exceeding 120°F (and on a municipal chlorinated water supply - *models designated as **ERR** on the rating decal*); provided further that the water conditioner is not subject to abuse, misuse, alteration, neglect, freezing, accident or negligence; and provided further that the water conditioner is not damaged as the result of any unusual force of nature such as, but not limited to, flood, hurricane, tornado or earthquake. EcoWater Systems, Inc., is excused if failure to perform its warranty obligations is the result of strikes, government regulation, materials shortages, or other circumstances beyond its control.

*THERE ARE NO WARRANTIES ON THE WATER CONDITIONER BEYOND THOSE SPECIFICALLY DESCRIBED ABOVE. ALL IMPLIED WARRANTIES, INCLUDING ANY IMPLIED WARRANTY OF MERCHANTABILITY OR OF FITNESS FOR A PARTICULAR PURPOSE, ARE DISCLAIMED TO THE EXTENT THEY MIGHT EXTEND BEYOND THE ABOVE PERIODS. THE SOLE OBLIGATION OF ECOWATER SYSTEMS, INC. UNDER THESE WARRANTIES IS TO REPLACE OR REPAIR THE COMPONENT OR PART WHICH PROVES TO BE DEFECTIVE WITHIN THE SPECIFIED TIME PERIOD, AND ECOWATER IS NOT LIABLE FOR CONSEQUENTIAL OR INCIDENTAL DAMAGES. NO ECOWATER DEALER, AGENT, REPRESENTATIVE, OR OTHER PERSON IS AUTHORIZED TO EXTEND OR EXPAND THE WARRANTIES EXPRESSLY DESCRIBED ABOVE.

Some states do not allow limitations on how long an implied warranty lasts or exclusions or limitations of incidental or consequential damage, so the limitations and exclusions in this warranty may not apply to you. This warranty gives you specific legal rights, and you may have other rights which vary from state to state. This warranty applies to consumer-owned installations only.

GUARANTEE BOND

The Continental Casualty Company, an Illinois corporation, has issued it's bond in the form shown below, guaranteeing full performance by EcoWater Systems, Inc.

CONTINENTAL CASUALTY COMPANY, Chicago, Illinois, hereinafter called ''Surety,'' guarantees unto Harris Trust and Savings Bank, 111 West Monroe Street, Chicago, Illinois, as Trustee holding said Guarantee Bond under the terms of a Trust Agreement dated September 15, 1963, for the use and benefit of original purchasers of residential EcoWater Systems Units within the Continental United States, as described herein, that EcoWater Systems, Inc., will discharge the obligations of the ''EcoWater Bonded Parts and Service Guarantee Policy.''

PROVIDED, HOWEVER, that:

1. Liability of Surety hereunder shall not exceed the sum of FIVE HUNDRED AND 00/100th DOLLARS ($500.00) as to any one installation, and shall not exceed the sum of FIVE HUNDRED THOUSAND AND 00/100th DOLLARS ($500,000.00) in the aggregate, and
2. There shall be no liability hereunder as to any purchaser to whom there has not been issued at the time of installation and purchase completed registration card which is enclosed with a facsimile of this bond, and who has not returned such card in accordance with this guarantee.
3. Claim must be made by such original purchaser in writing within 30 days from the expiration of these guarantees upon EcoWater Systems, Inc., PO Box 64420, St. Paul, MN 55164, to perform the terms of said guarantee, and notice of any default on such guarantee must be sent to Surety at its address by Registered Mail.

CONTINENTAL CASUALTY COMPANY

attest: _____ R. A. Kirchner _____
assistant secretary

by: _____ Robert Arkelb _____
vice-president

This is to certify that the original of the above guarantee and bond is on file with Harris Trust and Savings Bank, 111 West Monroe Street, Chicago, Illinois.

HARRIS TRUST AND SAVINGS BANK
As Trustee

by: _____ R.K. Hain _____
authorized officer

WATER

Man's very existence depends on water. It is one of the basic commodities of life. Water is best as nature provides it, is a common misconception. Practically all natural water needs refinement or treatment to make it safe to drink or more satisfactory to use.

The earth's water supply cycle starts in the upper cloud layers. As it falls to the earth as rain or snow, it picks up impurities and gases from the atmosphere. Landing on earth, it seeps over and through the ground, dissolving earth minerals. Passing through limestone, it dissolves calcium and magnesium, the hardness minerals. Iron deposits impart iron to the water. Acidity and sediments are other water conditions.

Municipal water supplies come from surface reservoirs, such as lakes and rivers, or from underground reservoirs. Usually, municipalities chlorinate the water to make it safe to drink. Sediment is removed by filtration. Tastes and odors are reduced or eliminated. The water is conditioned to comply with certain specifications. However, hardness minerals, tastes and odors are not always reduced to the most desirable levels.

Underground reservoirs provide our private water supplies. Because the water is raw and untreated, it can have varying amounts of hardness, iron, tastes, odors, acidity, or combinations of these. Different localities and water levels affect mineral content.

WATER CONDITIONING

Water conditioning is the treatment of 4 general conditions. These are: (1) *Hardness*, (2) *Iron*, (3) *Acidity and* (4) *Sediments*.

(1) *HARDNESS* is a term to describe the presence of calcium and magnesium minerals in water. A chemical analysis accurately measures the amount of minerals in grain weight. For example, 1 gallon of water with 5 grains per gallon (gpg) hardness has dissolved minerals, that if solidified, about equals the size of 1 ordinary aspirin tablet. One gallon of water, 25 gpg hard, has a mineral content equal in size to 5 aspirin tablets. Water hardness varies greatly across the country. It generally contains from 3 to 100 gpg.

Hard water affects living in general. Hardness minerals combine with soap to make a soap curd. The curd greatly reduces the cleaning action of soap. Precipitated hardness minerals form a crust on cooking utensils, appliances, and plumbing fixtures. Even the tastes of foods are affected. A water softener removes the hardness minerals to eliminate these problems, and others. Pages 25-28 describe how the EcoWater conditioner works.

Sodium Information: Water softeners using sodium chloride (salt) for regeneration add sodium to the water. Persons on sodium restricted diets should consider the added sodium as part of their overall intake.

(2) *IRON* in water is measured in parts per million (ppm). The total* ppm of iron, and type or types*, is determined by chemical analysis. Four different types of iron in water are: ❶ Ferrous (clear water), ❷ Ferric (red water), ❸ Bacterial and organically bound iron, ❹ Colloidal and inorganically bound iron (ferrous or ferric).

*Water may contain 1 or more of the 4 types of iron and any combination of these. Total iron is the sum of the contents.

❶ Ferrous (clear water) iron is soluble and dissolves in water. It is usually detected by taking a sample of water in a clear bottle or glass. Immediately after taking, the sample is clear. As the water sample stands, it gradually clouds and turns slightly yellow or brown as air oxidizes the iron. This usually occurs in 15 to 30 minutes. An EcoWater conditioner will remove moderate amounts of this type of iron (see specifications).

❷ Ferric (red water), and ❸ Bacterial and organically bound irons are insoluble. This iron is visible immediately when drawn from a faucet because it has oxidized before reaching the home. It appears as small cloudy yellow, orange, or reddish suspended particles. After the water stands for a period of time, the particles settle to the bottom of the container. Generally these irons are removed from water by filtration. Chlorination is also recommended for bacterial iron. An EcoWater conditioner will remove minimal quantities (see specifications) of ferric iron.

continued

❹ Colloidal and inorganically bound iron is a ferric or ferrous form that will not filter or exchange out of water. In some instances, treatment may improve colloidal iron water, but **always consult a qualified water chemistry lab** before attempting to treat it. Colloidal iron water usually has a yellow appearance when drawn. After standing for several hours, the color persists and the iron does not settle, but remains suspended in the water.

Iron in water causes stains on clothing and plumbing fixtures. It negatively affects the taste of food, drinking water, and other beverages.

(3) *ACIDITY* or acid water is caused by carbon dioxide, hydrogen sulfide, and sometimes industrial wastes. It is corrosive to plumbing, plumbing fixtures, water heaters, and other water using appliances. It can also damage and cause premature failure of seals, diaphragms, etc., in water handling equipment.

A chemical analysis is needed to measure the degree of acidity in water. This is called the pH of water. Water testing below 6.9 pH is acidic. The lower the pH reading, the greater the acidity. A neutralizer filter or a chemical feed pump are usually recommended to treat acid water.

(4) *SEDIMENT* is fine, foreign material particles suspended in water. This material is most often clay or silt. Extreme amounts of sediment may give the water a cloudy appearance. A sediment filter normally corrects this condition.

1. Cabinet models are factory assembled. During installation, remove the top and salt hole covers. Set aside to prevent damage. Check the brinewell to be sure it is secured and vertical (FIG. 1).

2. Lift the brine valve out of the brinewell. Be sure the float stem is parallel to the stand tube so seals will seat properly during operation. Replace the brine valve in the brinewell bottom and install the brinewell cover.

3. Install the brine tank overflow grommet and elbow in the 3/4" diameter hole in the brine tank sidewall.

FIGURE 1
CABINET MODELS

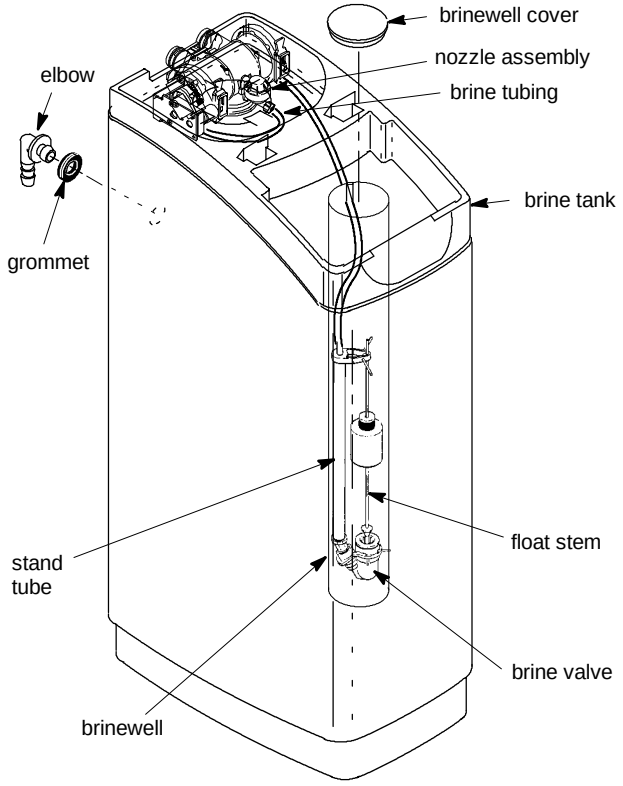

FIGURE 2
TWO TANK MODELS

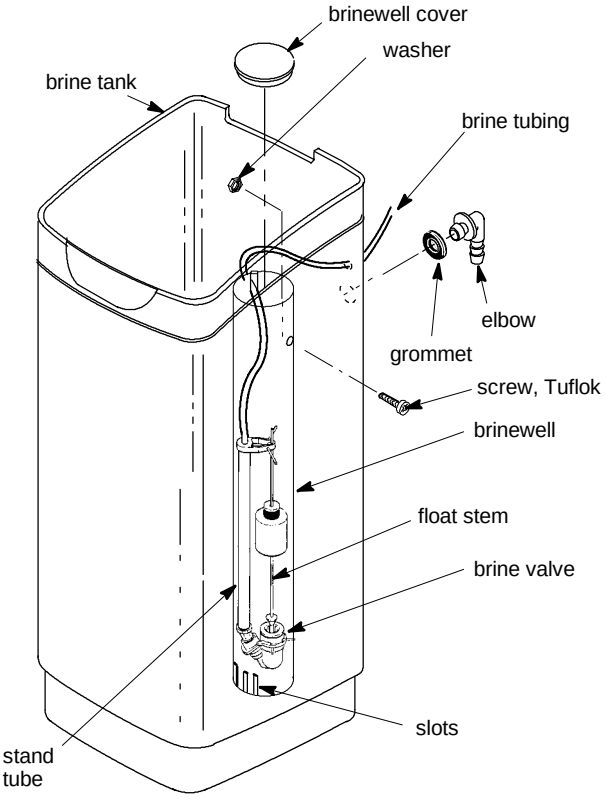

FIG. 3 - TYPICAL INSTALLATION DRAWINGS

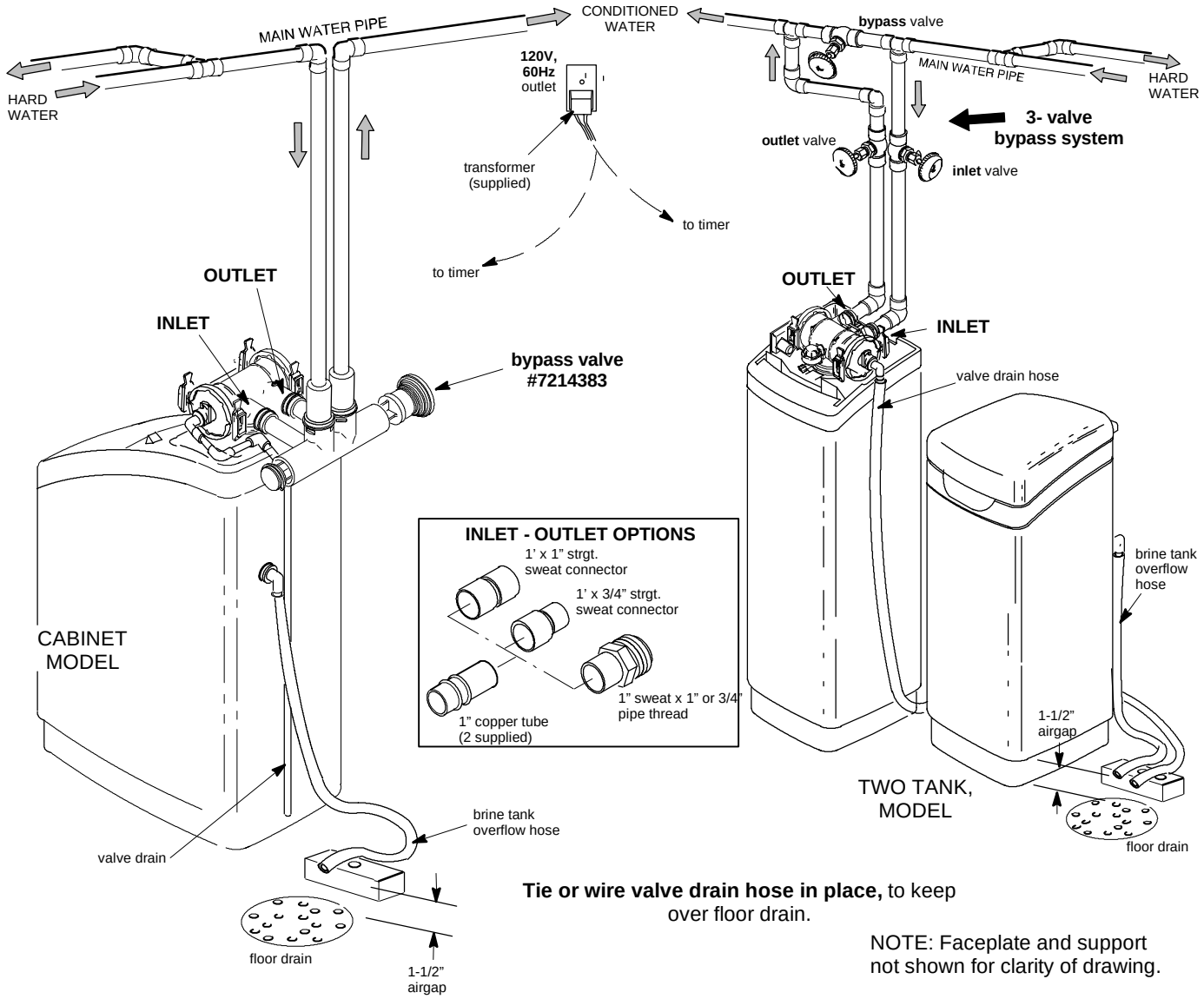

INLET - OUTLET PLUMBING OPTIONS

- ALWAYS INSTALL either an EcoWater bypass valve #7214383, or a 3 valve bypass system. Bypass valves allow you to turn off water to the softener for repairs if needed, but still have water in house pipes.
- Use 1"... or, 3/4" (minimum) pipe and fittings.
- Use sweat copper... or, threaded pipe*... or, PVC plastic pipe.*

*Sweat soldering is required to adapt to the fittings (1" male) supplied with the EcoWater System Unit, or obtain approved compression adaptors. The following special fittings are available from EcoWater. **Be sure to comply with all local plumbing codes.**

OPTIONAL INLET/OUTLET FITTINGS

— #7104546 PVC Nipple – Use in place of included copper inlet and outlet tubes.

— #7129211 Adaptor Fitting, 1–1/2" (2) – Use in place of included copper inlet and outlet tubes.

— #7120259 Elbow – Extends inlet and/or outlet in any 90˚ direction.

OTHER REQUIREMENTS

- A drain is needed for regeneration discharge water. A floor drain is preferred, close to the EcoWater conditioner. A laundry tub, standpipe, etc., are other drain options.

FIG. 4 - DRAIN OPTIONS

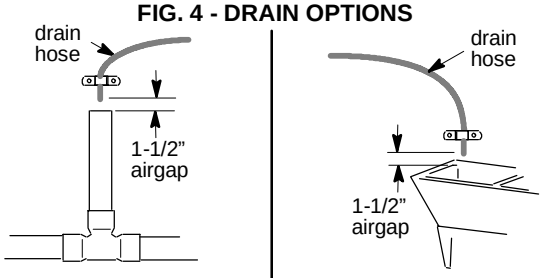

- A 120V-60Hz, grounded, continuously "live", electrical outlet is needed within 10' of the EcoWater conditioner.

TOOLS YOU MAY NEED

- common screwdriver
- pliers
- cross-point screwdriver
- tape measure

SOLDERED COPPER	THREADED	CPVC PLASTIC
• tubing cutter	• hacksaw or pipe cutter	• hacksaw
• propane torch	• threading tool	• adjustable wrench
• LEAD-FREE solder and flux	• pipe joint compound*	• solvent cement*
• emery cloth, sandpaper or steel wool		• primer

MATERIALS YOU MAY NEED

- bypass valve, or 3 valves
- pipe and fittings as required
- 1/2" I. D. high quality, flexible hose for the valve drain,* and brine tank drain. The brine tank drain elbow accepts either 1/2" or 3/8" I. D. hose.

*VALVE DRAIN OPTIONS: Flexible drain hose is not allowed in all localities (check your codes). To make a rigid valve drain run, cut the barbed section off the drain fitting for access to the 1/2" pipe threads. Then plumb a rigid drain as needed (see diagram). An optional drain fitting, part no. 7141239, is available from EcoWater to connect a standard garden hose, or 5/8" I.D. hose onto a barb.

FIG. 5

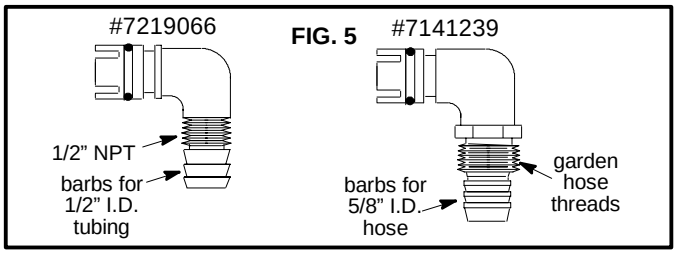

HARD PLUMB DIAGRAM

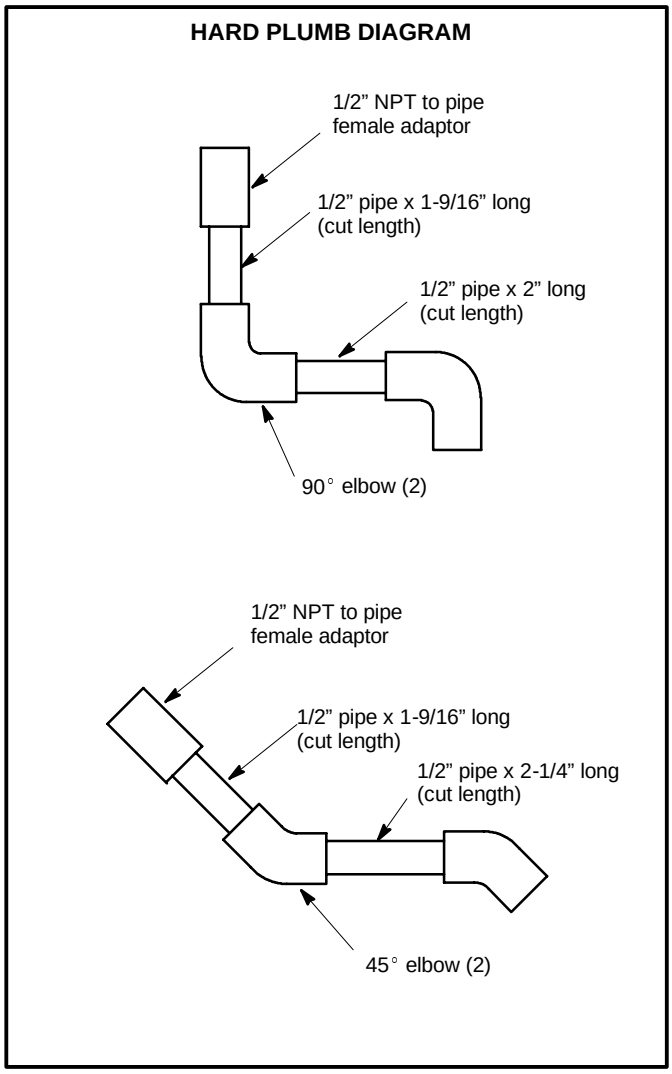

NOTE: Codes in the state of Massachusetts require installation by a licensed plumber. For installation, use plumbing code 248-CMR of the Commonwealth of Massachusetts.

SELECT INSTALLATION LOCATION

Consider all of the following when selecting an installation location for the EcoWater conditioner.

- To condition all water in the home, install the EcoWater conditioner close to the water supply inlet, and before all other plumbing connections, **except** outside water pipes. Outside faucets should remain on hard water to avoid wasting conditioned water and salt.
- A nearby drain is needed to carry away regeneration discharge water. A floor drain is preferred, with a laundry tub, standpipe, etc., as other options (check your local codes).
- **The EcoWater conditioner works on 24 volts only**. A transformer is included to reduce 120-60 Hz house power. Provide an approved, grounded outlet within 10' of the conditioner. The conditioner includes a 10' power cable for connection between the transformer and the controller.
- Position the EcoWater conditioner at least 6" from surrounding walls, or other appliances, to allow access for adding salt and servicing.
- Locate the EcoWater conditioner, in the plumbing system, **after** all other installed water conditioning equipment, except for a taste and odor filter. A taste and odor filter is installed after all equipment. **Always install the EcoWater conditioner BEFORE the water heater.** See the Safety Guides on page 2. To reduce the risk of hot water back-up, conditioned water piping between the EcoWater conditioner and water heater should be as long as possible.
- Install the EcoWater conditioner in a place water damage is least likely to occur if it develops a leak.
- If installing the conditioner in an outside location, be sure to provide protection from the elements, contamination, vandalism, and sunlight heat. The sun's heat can melt plastic parts.

FIGURE 6

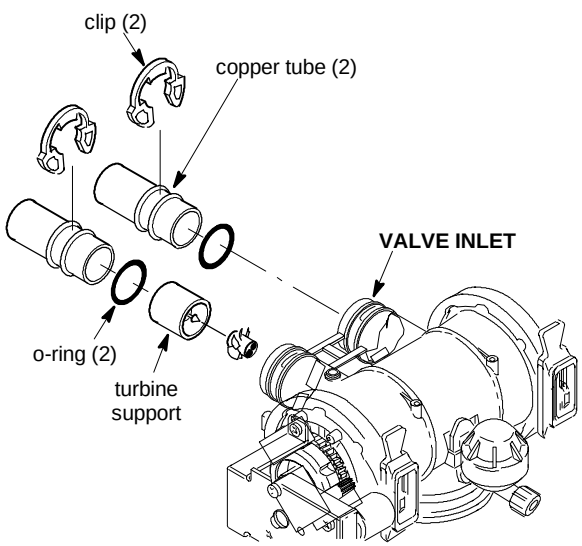

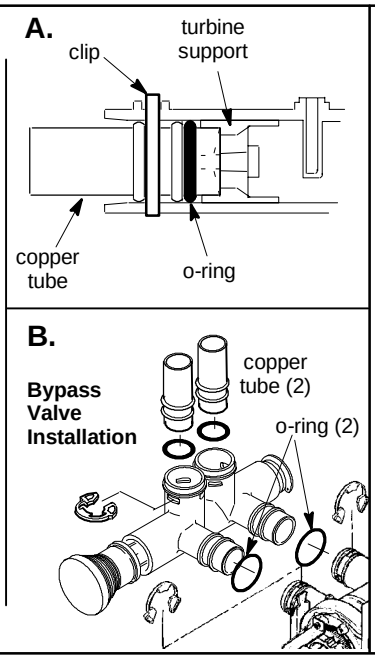

FIGURE 7

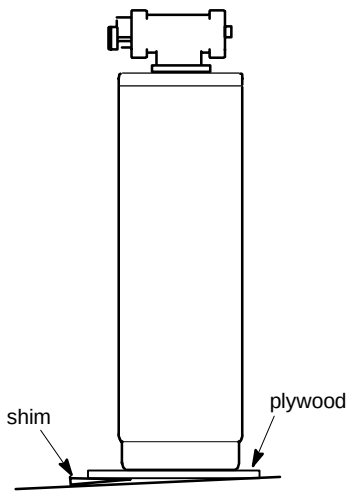

1. INSTALL BYPASS VALVE and/or COPPER TUBES

IMPORTANT: The turbine support (FIG. 6) is factory installed. The bypass valve or outlet copper tube will not insert properly if the support assembly is reversed or not fully into the valve port.

a. IF INSTALLING AN ECOWATER BYPASS VALVE, put lubricated o-ring seals onto both bypass valve ports (FIG. 6B). Carefully slide the bypass valve into the softener valve and install the "C" clips.

b. Slide a lubricated o-ring seal onto each of the copper tubes. Carefully insert the copper tubes into the bypass valve (FIG. 6B), or into the softener valve (FIG. 6 and 6A). Then install the ''C'' clips.

NOTE: For lubrication, use silicone grease approved for potable water supplies.

IMPORTANT: Be sure the bypass valve and/or copper tubes are firmly held in place by the plastic ''C'' clips, and the clips are securely in place.

2. TURN OFF WATER SUPPLY

a. Close the main water supply valve, near the well pump or water meter.

b. Shut off the electric or fuel supply to the water heater.

c. Open high and low faucets to drain all water from the house pipes.

3. INSTALLING THREE VALVE BYPASS

If installing a 3-valve bypass system, plumb as needed using FIG. 3 as a guide. When installing sweat copper, **be sure to use lead-free solder and flux**, required by federal and state codes. Use pipe joint compound on outside pipe threads.

4. MOVE THE ECOWATER UNIT INTO PLACE

Move the EcoWater System Unit (resin tank only if 2-tank model) into installation position. Set it on a solid, smooth and level surface. If needed, place the unit on a section of plywood, a minimum of 3/4" thick. Then, shim under the plywood to level the unit, FIG. 7.

CAUTION: *DO NOT PLACE SHIMS DIRECTLY UNDER THE BRINE TANK.* The weight of the tank, when full of water and salt, may cause the tank to fracture at the shim.

5. ASSEMBLE INLET AND OUTLET PLUMBING

Measure, cut, and loosely assemble pipe and fittings from the main water pipe (or from the bypass valves installed in step 3), to the inlet and outlet copper tubes, installed in step 1b.

Be sure **hard water** supply pipe **goes to** the **valve inlet side**. Trace the water flow direction to be sure.

CAUTION: Be sure to fit, align and support all plumbing to prevent putting stress on the softener valve inlet and outlet. Undo stress may cause damage to the valve.

continued

FIGURE 8

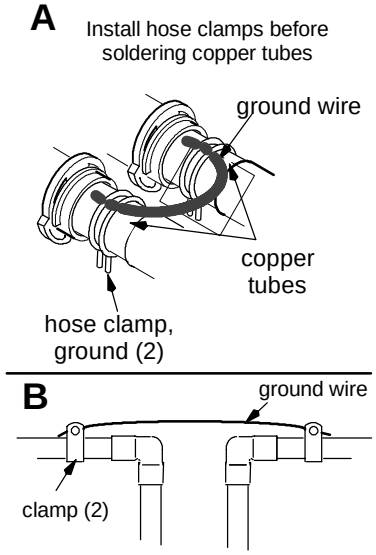

FIGURE 9

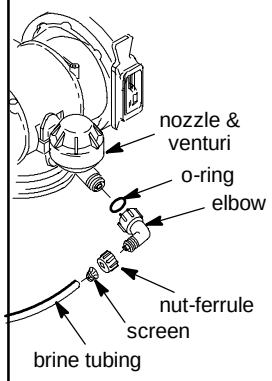

Note: To ease brine tubing connection, use the elbow and o-ring seal as shown. Lubricate the o-ring and insert into the elbow. Turn the elbow on and tighten. Then, back-off up to 1 turn, as needed.

FIGURE 10

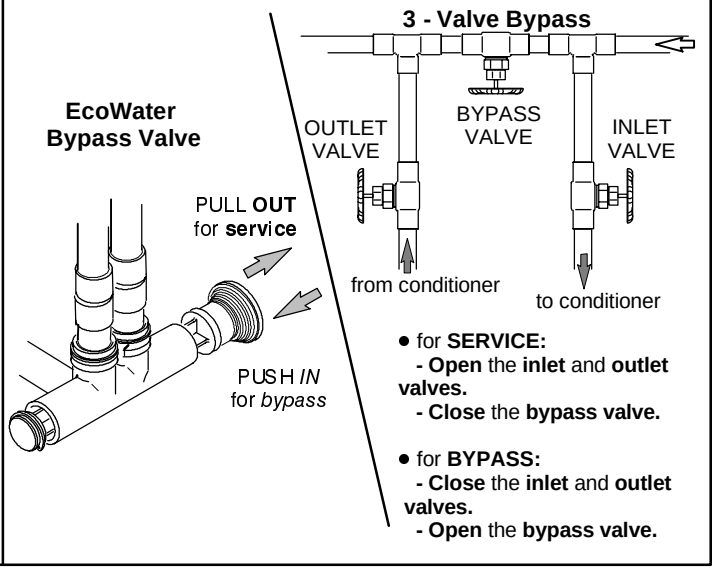

6. CONNECT INLET AND OUTLET PLUMBING

Complete the inlet and outlet plumbing as applicable, below.

a. SOLDERED COPPER

(1) Thoroughly clean and flux all joints.

(2) Pull the plastic ''C'' clips and remove the inlet and outlet tubes from the valve. Remove o-rings from the tubes. **DO NOT solder with tubes in the valve.** Soldering heat will damage the valve.

NOTE: If installing a ground as shown in figure 8A, **place hose clamps on copper tubes before soldering** (see step 7a).

(3) Make all solder connections. Be sure to keep fittings fully together, and pipes square and straight.

IMPORTANT: Be sure the bypass valve and/or copper tubes are firmly held in place by the plastic ''C'' clips, and the clips are securely in place.

b. THREADED PIPE

(1) Apply pipe joint compound to all outside pipe threads.

(2) Tighten all threaded joints.

(3) If soldering to the inlet and outlet tubes, observe step **a** above.

c. CPVC PLASTIC PIPE

(1) Clean, prime and cement all joints, following the manufactures instructions supplied with the plastic pipe and fittings.

(2) If soldering to the inlet and outlet tubes, observe step **a** above.

7. COLD WATER PIPE GROUNDING

The house cold water pipe (metal only) is often used as a ground for the house electrical system. The 3-valve bypass type of installation, shown in FIG. 3, will maintain ground continuity. If you use the plastic bypass, continuity is broken. To restore the ground, do either step **a** or **b** following.

a. Use the included hose clamps and wire, to make a jumper across the inlet and outlet copper tubes, FIG. 8A. Put the hose clamps on the copper tubes before soldering, step 6a.

b. Install a #4 copper wire across the removed section of main water pipe, securely clamping at both ends, FIG. 8B (parts not included).

8. INSTALL VALVE DRAIN HOSE

NOTE: See valve drain options on page 8.

a. Connect a length of 1/2" I.D. hose (check codes) to the valve drain elbow, on the controller, FIG. 5. Use a hose clamp to hold the hose in place. Route the hose out through the notch in the back of the top cover.

b. Run the hose to the floor drain, and as typically shown in FIG. 4, tie or wire the end to a brick or other heavy object. This will prevent ''whipping'' during regenerations. Be sure to provide a 1-1/2" minimum air gap, to prevent possible sewer water backup.

NOTE: In place of a floor drain, you can use a laundry tub or standpipe as a good drain point for this hose. Avoid long drain hose runs, or elevating the hose more than 8' above the floor.

9. IF INSTALLING A **TWO TANK MODEL,** move the brine tank into position next to the resin tank. Observe the instructions in step 4, page 10.

10. INSTALL BRINE TANK OVERFLOW HOSE

a. Connect a length of 1/2" I. D. hose to the brine tank overflow elbow and secure in place with a hose clamp.

b. Run the hose to the floor drain, or other suitable drain point **no higher than the drain fitting** on the tank. If the tank overfills with water, the excess water flows to the drain point.

11. On Two Tank models, connect the brine tubing to the nozzle and venturi housing, FIGS. 1, 2 and 9. Use the elbow, o-ring, nut-ferrule and screen included on the skin-pack. Tighten the nut by hand, then another 1/4 turn with a pliers.

NOTE: Route the tubing neatly out of the way and cut it to the desired length. For longer distances, order the optional parts shown on page 37, to extend the tubing.

ECR3000R20 MODEL: A white color coded nozzle and venturi (.023) is factory installed for use on water supply pressure of 50 psi and higher. If water supply pressure is under 50 psi, install the black nozzle and venturi (.032) along with the .1 gpm flow plug. They are included on the small parts skin pack. Insert the .1 gpm flow plug into the nozzle and venturi, as shown, NUMBERED SIDE UP, CONCAVE SIDE DOWN.

CAUTION: When removing and installing the cap, hold the housing tightly with 1 hand to prevent breakage.

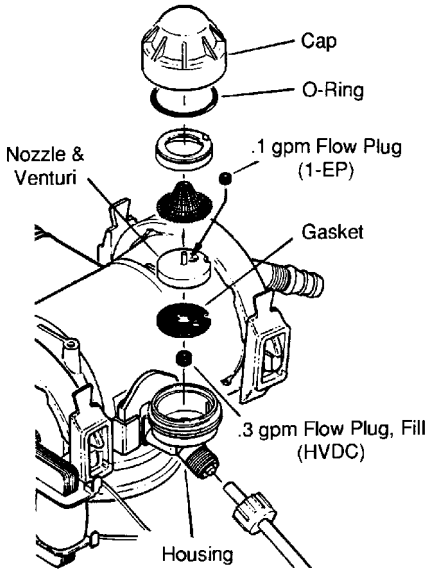

12. PRESSURE TESTING FOR LEAKS

To prevent excessive air pressure in the EcoWater Unit and plumbing system, do the following steps EXACTLY in order.

a. Fully open two or more *conditioned* cold water faucets nearby the EcoWater Unit.

b. Place the bypass valve(s) in ''bypass'' position. See figure 10.

c. Fully open the main water supply valve. Observe steady flow from the opened faucets, with no air bubbles.

d. ***EXACTLY*** as follows, place bypass valve(s) in ''service''.

(1) SINGLE BYPASS VALVE: **SLOWLY,** move the valve stem toward ''service'', pausing several times to allow the unit to pressurize slowly.

(2) 3-VALVE BYPASS: Fully close the bypass valve and open the outlet valve. **SLOWLY,** open the inlet valve, pausing several times to allow the unit to pressurize slowly.

e. After about 3 minutes, open a hot water faucet for about 1 minute, or until all air is expelled, then close.

f. Close all cold water faucets and check your plumbing work for leaks.

13. ADD WATER AND SALT TO THE BRINE TANK

a. Using a pail or garden hose, add about 3 gallons of water into the brine tank. DO NOT pour into the brinewell, FIGS. 1 and 2, page 6.

b. Fill the brine tank with salt. You can use most water conditioner salts, but it must be clean. Recommended nugget, pellet or coarse solar salts have less than 1% impurities. Salt storage capacity is shown on page 35.

NOTE: See page 28 for additional information on salt.

14. SANITIZING THE ECOWATER SYSTEM UNIT

Care is taken at the factory to keep your EcoWater System conditioner clean and sanitary. Materials used to make the unit will not infect or contaminate your water supply, and will not cause bacteria to form or grow. However, during shipping, storage, installing and operating, bacteria could get into the unit. For this reason, sanitizing as follows is suggested [1] when installing.

...Remove the brinewell cover and pour about 1-1/2 oz. (2 to 3 tablespoons) of common household bleach into the softener brinewell, FIGS. 1 and 2, page 6. Clorox, Linco, BoPeep, White Sail, Eagle, etc. are brand names of bleach readily available. **Replace the brinewell cover.**

...The final step in the sanitizing procedure is done as you complete the following steps, including controller programming on page 14.

[1] Recommended by the Water Quality Association. On some water supplies, the EcoWater System Unit may need periodic disinfecting.

15. CONNECT TRANSFORMER

a. Connect the power cable leads to the 2 terminals on the transformer.

NOTE: Check to be sure all leadwire connectors are secure on the back of the controller.

Caution: Be sure all wiring is away from the valve cam, which rotates during regenerations.

b. Plug the transformer into a continuously "live", grounded, 120V-60Hz house electrical outlet, approved by local codes. ***THE UNIT WORKS ON 24V ONLY. DO NOT CONNECT WITHOUT THE TRANSFORMER.***

16. START A RECHARGE

Press the RECHARGE keypad, move cursor to Set Recharge Now and press SELECT/EXIT (↲) keypad, starting a recharge. This recharge draws the sanitizing bleach into and through the EcoWater System Unit. Any air remaining in the unit is purged to the drain.

17. RESTART THE WATER HEATER

Turn on the electric or fuel supply to the water heater, and light the pilot, if applies.
NOTE: The water heater is filled with HARD water and, as hot water is used, it refills with conditioned water. In a few days, the hot water will be fully conditioned. To have fully conditioned hot water immediately, wait until the recharge (step 16) is over. Then, drain the water heater until water runs cold.

18. Install the tank top cover(s).

COMPLETE THE PROGRAMMING STEPS ON PAGES 14 AND 15.

FIGURE 11

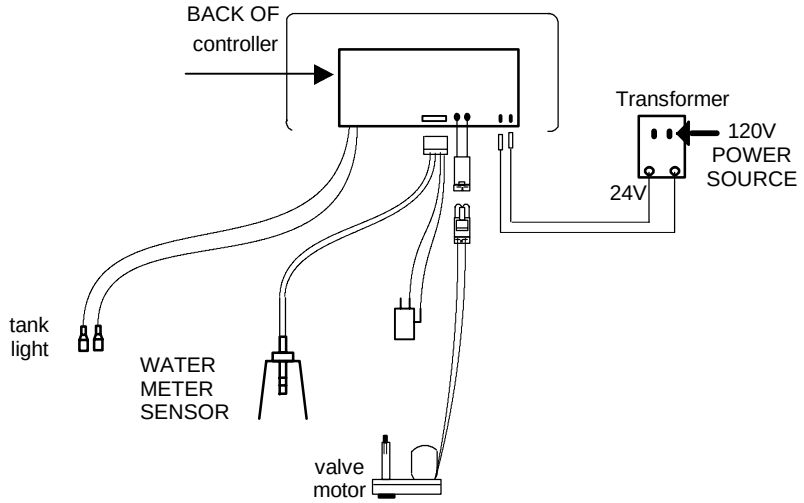

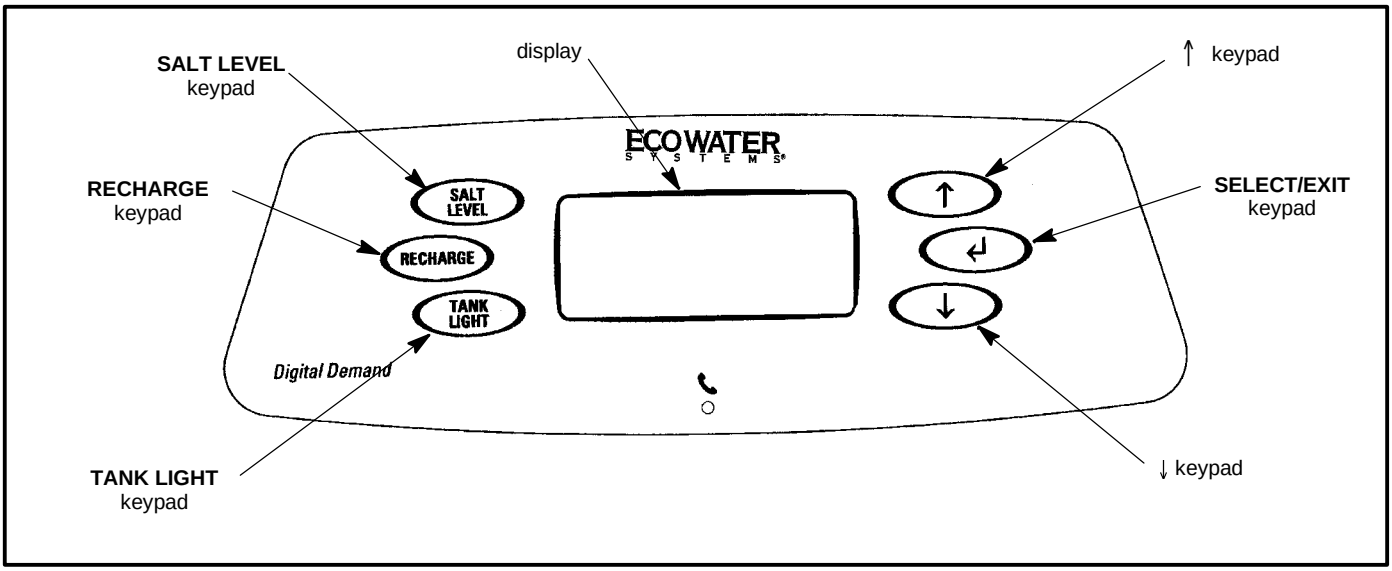

THE FOLLOWING STEPS ARE FOR FIRST TIME SET UP ONLY.

When the transformer is plugged in, a "beep" will sound, followed by the factory set model code display and software version for a few seconds. Then, 12:00 PM present time display.

```
*EcoWater Systems*

MODEL R20
VERSION M1.0
```

1. MODEL CODE: The controller is factory set to the model code, which provides the shortest recharge times and greatest water savings. Verify the correct model code or set if needed.

Note: To reset the model code, see page 21.

2. SET THE CLOCK: Use the (↑) or (↓) keypads to set the present time of day, being sure AM or PM shows, as applicable. Press (↑) to move the display ahead; press (↓) to move the time backward. NOTE: Each press of a keypad changes the time by 1 minute. Holding a keypad in changes the time by 32 minutes each second. Pressing the SELECT/EXIT (↲) keypad will set the clock.

```
Set Clock:
11:44AM

↑↓ Change      ↲ Exit
```

3. SET WATER HARDNESS: The controller is factory set to 25 grains. Set the grains per gallon hardness of your water supply. Water hardness is determined by water analysis, or call your local water department. Use the (↑) keypad to advance the number; use the (↓) keypad to reduce the number. Each press of a keypad changes the display by 1. Hold down the keypad to scroll. After 25, scrolling will be at a faster rate. NOTE: To compensate for iron in the water, add 5 to the hardness number for each 1 ppm of iron. Pressing the SELECT/EXIT (↲) keypad will set the hardness level. **NOTE:** If using potassium chloride (KCl) instead of standard sodium chloride (NaCl) water softener salt, hardness setting must be increased by 25%.

```
Set Hardness:
25 Grains

↑↓ Change      ↲ Exit
```

4. SET RECHARGE (REGENERATION) TIME: The controller is factory set to 2:00 AM. At this setting, the EcoWater conditioner begins recharge, or regeneration, ending no later than 5:30 AM. This is a good time in most households because water is not being used. If **hot** water is used while the unit is regenerating, the water heater will refill with *hard* water. To select a different recharge start time, use the (↑) or (↓) keypad. Pressing the SELECT/EXIT (↲) keypad will set the recharge time.

```
Set Recharge
Time:  2:00AM

↑↓ Change        ↲ Exit
```

5. REMOTE SET-UP: Press SELECT/EXIT (↲) to enter the Primary Menu. Move the cursor next to Advanced/Service Menu and press SELECT/EXIT (↲) to enter this Menu. Warning screen will show. Press (↑) keypad to continue. Move cursor to Test Remote and press SELECT/EXIT (↲) to enter this screen. The controller will start sending a signal to the remote every 3 seconds. Press reset on the back of remote. When the remote is receiving this signal, the LED's will flash red, amber, green. Now remote can be placed in a convenient location. The remote may not work in all places in your home. If the red LED flashes twice every 3 seconds, the remote is out of range of signal and needs to be repositioned. Press SELECT/EXIT (↲) to exit to the Advanced/Service Menu. Move square cursor (■) to EXIT and press SELECT/EXIT (↲). Now the unit should start transmitting a normal signal.

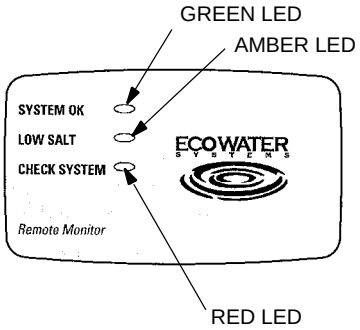


```
Warning: Changes
could affect unit
performance
↑ Continue   ↲ Cancel
```

```
Test Remote:
Sending Message

                 ↲ Exit
```

6. Press the RECHARGE keypad to get to the recharge menu. Move the cursor to Start Recharge Now and press the SELECT/EXIT (↲), starting a recharge. This recharge **draws the bleach** (see step 14, page 13) through the EcoWater conditioner **to sanitize** it and to purge any air remaining in the resin tank assembly.

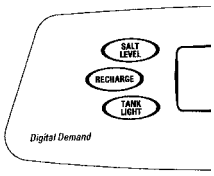

7. RESTART THE WATER HEATER: Turn on the electric or fuel supply to the water heater, and light the pilot, if applies.
NOTE: When the sanitizing regeneration is over, all remaining bleach is flushed from the conditioner and your cold water supply is ready for use. However, the water heater is filled with HARD water and, as hot water is used, it refills with conditioned water. In a few days, the hot water will be fully conditioned. To have fully conditioned hot water immediately, wait until the recharge (step 6) is over. Then, drain the water heater until water runs cold.

INSTALLATION OF THE DIGITAL DEMAND ECOWATER CONDITIONER IS COMPLETE.
Additional faceplate controller features and options are described on following pages.

FEATURES AND OPTIONS

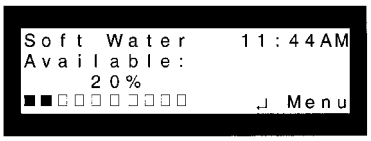

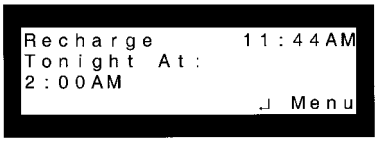

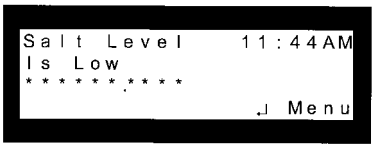

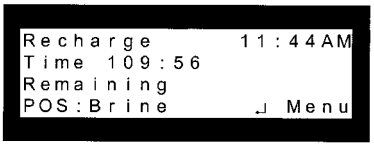

NORMAL SCREEN VIEWS

The display will scroll through as many as 5 screens at an interval of 4 seconds each.

- Soft Water Available will show a percent of available soft water and a bar graph at the bottom of the display.
- Water Flow Rate shows gallons per minute (GPM) flowing through the system at that time and a moving bar graph at the bottom of the screen.
- Recharge Tonight is shown only if the unit will be initiating a recharge that night.
- Salt Level is Low is shown only if the salt level is below the amount set for warning.
- If the unit is in recharge, the display will show remaining time in recharge and current stage of recharge.

PROGRAM MEMORY: If electrical power to the EcoWater conditioner goes off, the display is blank, but the faceplate controller keeps the correct time for at least 2 days. When electrical power comes on again, you have to verify clock time is correct. The MODEL CODE, HARDNESS and RECHARGE TIME never need resetting unless a change is desired.

Even if the controller is incorrect, after a long power outage, the unit works as it should to keep your water conditioned. However, regenerations may occur at the wrong time of day until you reset the controller to the correct time of day. To reset present time, see step 2 on page 14.

CONTROL FEATURES: There are 3 keypads on the left side of the display. **Salt Level** keypad is used when adding salt to the brine tank. The level number on the brinewell corresponds to the number to program into the controller. **Recharge** keypad has 2 options: Set/Cancel recharge tonight, which either sets or cancels a recharge for that night and Start Recharge Now, which will start a recharge immediately. NOTE: If in a recharge, and the Recharge keypad is pressed, it will advance the valve to the next regeneration cycle. On cabinet style units, there is also a **Tank Light** keypad. This will turn tank light on or off, and will work while in any screen. The tank light will automatically turn off after 4 minutes.

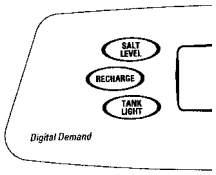

- **SOUND "BEEPER"-** A "beeper" sounds while pressing keypads for controller setup. One beep signals a change in the faceplate display. Repeated beeps means the controller will not accept a change from the keypad you have pressed, telling you to use another keypad. For example, while setting the hardness number, the beeper sounds repeatedly when the display reaches 1 using the (↓) keypad or 160, for example, using the (↑) keypad.

SALT LEVEL: This feature is used when salt is added to the conditioner. Press the salt level keypad and use the (↑) keypad to reset the level of salt as it corresponds to the decal on the brinewell. Press the SELECT/EXIT (↵) to set and return to Normal Screen Views.

INITIATING EXTRA RECHARGES

RECHARGE NOW: Press the Recharge keypad to go to the recharge menu. Move square cursor down to Start Recharge Now. Press SELECT/EXIT keypad and a recharge begins immediately.

To assure an adequate supply of conditioned water, at times of unusual or *unexpected* high water use demand, use the RECHARGE NOW feature. For example, if you have guests and the Soft Water Available screen is at or below 50%, you could deplete conditioned water capacity before the next recharge is automatically initiated. To be sure this will not happen, use RECHARGE NOW to restore 100% conditioned water capacity.

RECHARGE TONIGHT: Press the Recharge keypad to go to the recharge menu. Move cursor down to Set/Cancel Recharge Tonight. Press SELECT/EXIT keypad to return to Normal Screen Views. When this feature is set, the EcoWater conditioner will regenerate at the next programmed start time. This feature is beneficial to assure a sufficient supply of conditioned water for an *expected* heavy water usage the next day.

To cancel a recharge when RECHARGE TONIGHT is shown, press the Recharge keypad to go to the recharge menu. Move cursor down to Set/Cancel Recharge Tonight. Press SELECT/EXIT keypad to return to Normal Screen Views.

The following is a description of the options in the Primary Menu. To enter this menu press SELECT/EXIT (↵) keypad and move square cursor (■) to menu choice. To exit to Normal Screen Views move square cursor (■) to EXIT, which appears at either the top or the bottom of this menu. If no keypad has been pressed display will show for 4 minutes before defaulting back to the Normal Screen Views.

Set Clock: Enter Primary Menu. Press the (↑) or (↓) keypads until cursor is next to Set Clock. Again, use the (↑) or (↓) keypads to set the present time of day, being sure AM or PM shows, as applicable. Press (↑) to move the display ahead; press (↓) to move the time backward. NOTE: Each press of a keypad changes the time by 1 minute. Holding a keypad in changes the time by 32 minutes each second. Press the SELECT/EXIT (↵) keypad to set.

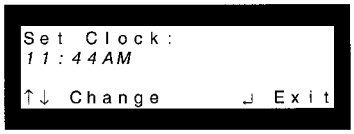

Set Water Hardness: Enter Primary Menu. Press the (↑) or (↓) keypads until cursor is next to Set Hardness. Press the SELECT/EXIT (↵) keypad once to display a flashing number and GRAINS. Set the grains per gallon hardness of your water supply. Use the (↑) keypad to advance the number; use the (↓) keypad to reduce the number. Pressing the SELECT/EXIT (↵) keypad will set the hardness level. **NOTE:** If using potassium chloride (KCl) instead of standard sodium chloride (NaCl) water softener salt, hardness setting must be increased by 25%.

Set Recharge (Regeneration) Time: Enter Primary Menu. Press the (↑) or (↓) keypads until cursor is next to Set Recharge Time. Press the SELECT/EXIT (↵) keypad once to display a flashing 2:00 AM. At this setting, the EcoWater conditioner begins recharge, or regeneration, at 2:00 AM., ending no later than 5:30 AM. This is a good time in most households because water is not being used. If **hot** water is used while the unit is regenerating, the water heater will refill with *hard* water. To select a different recharge start time, use the (↑) or (↓) keypad. Pressing the SELECT/EXIT (↵) keypad will set the recharge time.

continued

Primary Menu, continued

Water Flow Rate: Enter Primary Menu. Press the (↑) or (↓) keypads until cursor is next to Water Flow Rate. Press the SELECT/EXIT (↲) keypad. When selected, this screen will show the water flow rate in gallons per minute (GPM) or liters per minute (LPM) with the moving bar graph at the bottom of the display.

```
Water          11:44AM
Flow Rate:
2.1GPM
■■□□□□□□□□□      ↲ Menu
```

Water Used Today: Enter Primary Menu. Press the (↑) or (↓) keypads until cursor is next to Water Used Today. Press the SELECT/EXIT (↲) keypad and the gallons/liters used since midnight will be shown in the display.

```
Soft Water
Used Today:
588 Gallons
                ↲ Exit
```

Average Water Use: Enter Primary Menu. Press the (↑) or (↓) keypads until cursor is next to Average Water Use. Press the SELECT/EXIT (↲) keypad and the average gallons/liters use each day will be shown in the display.

```
Average Daily
Water Use:
1522 Liters
                ↲ Exit
```

Soft Water Meter: Enter Primary Menu. Press the (↑) or (↓) keypads until cursor is next to Soft Water Meter. Press the SELECT/EXIT (↲) keypad. This screen is similar to a trip odometer in that it will count the number of gallons/liters through the system until it is reset. To reset back to zero press the (↓) keypad.

```
Soft Water
Meter:
343 Gallons
↓ Reset         ↲ Exit
```

Set Rolling Screen: Enter Primary Menu. Press the (↑) or (↓) keypads until cursor is next to Set Rolling Screen. Press the SELECT/EXIT (↲) keypad. This menu will disable the Normal Screen Views from scrolling and will show only the screen that is most current.

```
Set Rolling Display
Screens: ON

↑↓ Change       ↲ Exit
```

Set 12/24 Hour Clock: Enter Primary Menu. Press the (↑) or (↓) keypads until cursor is next to Set 12/24 Hour Clock. Press the SELECT/EXIT (↲) keypad. Moving the (↑) or (↓) keypads will change clock display from 12 hour (AM & PM) or 24 hour format.

```
Set 12/24 Hour
Clock: 12 Hour

↑↓ Change       ↲ Exit
```

Set Gallons/Liters: Enter Primary Menu. Press the (↑) or (↓) keypads until cursor is next to Set Gallons/Liters. Press the SELECT/EXIT (↲) keypad. Moving the (↑) or (↓) keypads will change displays to indicate water in gallons or liters.

```
Set Gallons/Liters:
Gallons

↑↓ Change       ↲ Exit
```

Set Grains/PPM: Enter Primary Menu. Press the (↑) or (↓) keypads until cursor is next to Set Grains/PPM. Press the SELECT/EXIT (↲) keypad. Change between diplaying hardness units in grains or parts per million (PPM).

```
Set Grains/PPM:
PPM

↑↓ Change       ↲ Exit
```

Primary Menu, continued

Remote Status: Enter Primary Menu. Press the (↑) or (↓) keypads until cursor is next to Remote Status. Press the SELECT/EXIT (↵) keypad. The current remote status is displayed.

```
Remote:Installed
Status:Low Salt
                ↵ Exit
```

Send E.A.S.E. Message: Enter Primary Menu. Press the (↑) or (↓) keypads until cursor is next to Send E.A.S.E. Message. Press the SELECT/EXIT (↵) keypad. The unit will automatically start sending E.A.S.E. message and show a progress bar on the display. See page 30.

```
Sending EASE Message
■■■■■■■□□ 80%
                ↵ Cancel
```

Advanced/Service: By entering these menus, a warning screen will first be displayed. Only technicians or knowledgeable users should use these menus.

```
WARNING: Changes
could affect unit
performance
↑ Continue  ↵ Cancel
```

The following is a description of the options in the Advanced/Service Menu. To enter any of the following menus, press SELECT/EXIT (↲) to enter Primary Menu. Press the (↑) or (↓) keypads until cursor is next to Advanced/Service. Press the SELECT/EXIT (↲) keypad to enter this menu. Warning screen will show, press the (↑) keypad to continue. To exit to Normal Screen Views move square cursor (■) to EXIT, which appears at either the top or the bottom of this menu. If no keypad has been pressed display will show for 4 minutes before defaulting back to the Normal Screen Views.

Set Language: Press the (↑) or (↓) keypads until cursor is next to Set Language. Language can be changed from English to Spanish or French. **Warning:** If the language has been mistakenly changed, the following steps can be followed to reset.

```
■ English
  Español
  Français
↑↓ Change    ↲ Select
```

1) Unplug transformer, then reapply power to the unit. After 4 seconds, the time of day should show in the upper right corner. If the time of day is not shown, press the SELECT/EXIT (↲) keypad until it is.
2) Press the SELECT/EXIT (↲) keypad.
3) Press the (↓) keypad until the square cursor (■) is next to one of the following:

Advanced/Service (English)
Servicio/Avanzando (Spanish)
Fonct avanc (French)

4) Press the SELECT/EXIT (↲) keypad.
5) Press the (↑) keypad.
6) Press the (↓) keypad until the square cursor (■) is next to one of the following:

Set Language (English)
Seleccionar idioma (Spanish)
Réglage langue (French)

7) Press the SELECT/EXIT (↲) keypad.
8) Language can now be selected by pressing the (↑) or (↓) keypads until the cursor is next to correct language.
9) Press the SELECT/EXIT (↲) keypad to select language.
10) Press the (↑) or (↓) keypads until cursor is next to EXIT.
11) Press the SELECT/EXIT (↲) keypad.

Diagnostics: Press the (↑) or (↓) keypads until cursor is next to Diagnostics and press SELECT/EXIT (↲). This screen is for viewing only and will show any error codes plus information about the unit. Use the (↑) or (↓) keypads to view all lines of the screen. See page 31.

```
4:45PM Error 0
Pos:BACKWASH    6:43
Req Pos:RINSE
Motor:OFF Sw:OPEN   ↓
```

Test Remote: Press the (↑) or (↓) keypads until cursor is next to Test Remote and press SELECT/EXIT (↲). At set up, the unit will send a signal to the remote every 3 seconds to allow for correct positioning of remote monitor. Press SELECT/EXIT (↲) to exit. See page 22 for information on Remote Monitor.

```
Test Remote:
Sending Message

                ↲ Exit
```

continued

Advanced/Service Menu, continued

Set Low Salt Alert: Press the (↑) or (↓) keypads until cursor is next to Set Low Salt Alert and press SELECT/EXIT (↵). Use the (↑) or (↓) keypads to change Alert Level. At this level the controller will signal that salt needs to be added to the conditioner brine tank. Press SELECT/EXIT (↵) to exit.

```
Set Low Salt
Alert Level: 2

↑↓ Change      ↵ Exit
```

Efficiency Mode: Press the (↑) or (↓) keypads until cursor is next to Efficiency Mode and press SELECT/EXIT (↵). Default is **Auto Adjusting** which has a minimum efficiency of 3350 grains/lb of salt. Use the (↑) or (↓) keypads to change to either **High Capacity** which sets the regeneration salt doses that are increased by a certain % to handle applications requiring 1.5 PPM (parts per million) or less soft water, or to handle special cases such as low leakage requirement or problem water conditions; and **Salt Efficient** which operates at a minimum of 4000 grains/lb of salt. Changing this setting will prompt a warning that changes could affect performance. Press SELECT/EXIT (↵) to exit.

```
Set Efficiency Mode:
Auto Adjusting

↑↓ Change      ↵ Exit
```

```
Warning: Changes
could affect unit
performance
↑ Continue   ↵ Cancel
```

NOTE: California regulations require the Efficiency Mode to be ON for sale in California.

Set Max Days/Recharge: Press the (↑) or (↓) keypads until cursor is next to Set Max Days/Recharge and press SELECT/EXIT (↵). Default is Automatic. The algorithm will determine when to recharge. Use the (↑) or (↓) keypads to change between 1 and 15 days. With this setting the unit will never go past number of days set for a recharge, but could recharge before. Press SELECT/EXIT (↵) to exit.

```
Set Max Days Between
Recharges: AUTO

↑↓ Change      ↵ Exit
```

Set 97% Feature: Press the (↑) or (↓) keypads until cursor is next to Set 97% Feature and press SELECT/EXIT (↵). Default is Off. Use the (↑) keypad to set to On. By setting to On, unit will automatically recharge when 97% capacity has been used, at any time of day. Press SELECT/EXIT (↵) to exit.

```
Set 97%
Feature: OFF

↑↓ Change      ↵ Exit
```

Set Backwash Time: Press the (↑) or (↓) keypads until cursor is next to Set Backwash Time and press SELECT/EXIT (↵). Time can be changed from 1 to 30 minutes. See chart on page 33 for recommended backwash time. Press SELECT/EXIT (↵) to exit.

```
Set Backwash
Time: 5 MIN

↑↓ Change      ↵ Exit
```

Set 2nd Backwash: Press the (↑) or (↓) keypads until cursor is next to Set 2nd Backwash and press SELECT/EXIT (↵). Default is Off. Use the (↑) keypad to set to On. When set to On, unit will always perform a 2nd backwash and rinse. Press SELECT/EXIT (↵) to exit. Elect this feature if water contains a lot of sediment or iron.

```
Set 2nd
Backwash: OFF

↑↓ Change      ↵ Exit
```

continued

Advanced/Service Menu, continued

Set Fast Rinse: Press the (↑) or (↓) keypads until cursor is next to Set Fast Rinse and press SELECT/EXIT (↲). Time can be changed from 1 to 30 minutes. See chart on page 33 for recommended fast rinse time. Press SELECT/EXIT (↲) to exit.

```
Set Fast Rinse
Time: 15 MIN

↑↓ Change      ↲ Exit
```

Set Model: The controller is factory set to the model code, which provides the shortest recharge times and greatest water savings. For operation at higher salt efficiency levels, the alternate model code selection is required (see the product specification sheet). Do the following to change to this code, if desired.

1) Press the (↑) or (↓) keypads until cursor is next to Set Model and press SELECT/EXIT (↲). Warning screen will display, press (↑) to continue.

2) Use the (↑) or (↓) keypads to change to new model code. **Be sure to set the correct code, or the EcoWater conditioner will operate on incorrect timing.** NOTE: If this feature is changed, it will delete all information stored in the controller (Hardness, Recharge time will have to be reset. All usage history will be cleared). When you are certain the correct code appears, press SELECT/EXIT (↲) to exit. Warning screen will appear after changing model code, press (↑) to continue. The display will return to the start-up screens.

```
SET MODEL: ----

↑↓ Change      ↲ Exit
```

```
WARNING: Changes
could affect unit
performance
↑ Continue   ↲ Cancel
```

MODEL NUMBER (on rating decal)	Required Code	Alternate Code
ECR3000R20	**R20**	**HR20**
ERR3000R20	**R20+**	**-**
ECR3000R30	**R30**	**HR30**
ECR3002R30	**2R30**	**2H30**
ERR3002R30	**2R30**	**2H30**
ECR3002R40	**2R40**	**2H40**
ECR3002R50S	**2H50**	**-**
ECR3002R70	**2R70**	**2H70**

Restore To Factory Settings: Press the (↑) or (↓) keypads until cursor is next to Restore System and press SELECT/EXIT (↲). Default is No. If set to Yes will restore controller to factory settings. NOTE: This will affect **ALL** settings, and controller will go through first time set-up screens again. Press SELECT/EXIT (↲) to exit.

```
Restore To Factory
Settings: NO

↑↓ Change      ↲ Exit
```

Remote Monitor, Features and Options

This EcoWater unit comes with a Remote Monitor which can conveniently be placed in your home for viewing of your conditioners' status. During normal operation, the green LED will flash at intervals of 5 seconds. If the unit requires salt, the amber LED will flash, and if the unit needs to be checked the red LED will flash.

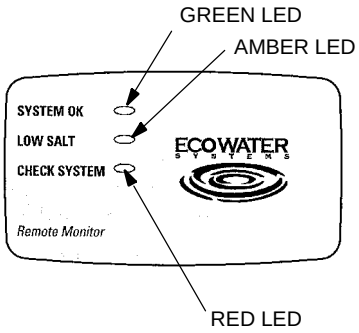

The controller on the EcoWater Systems conditioner will send a signal to the remote monitor every minute. The remote monitor will listen for a signal every 10 minutes. Any changes in softener status could possibly take up to 10 minutes before the remote registers the change. If the unit stops sending a signal, the remote will keep trying to listen for the signal. If after 10 minutes with no signal received, the remote will try 1 minute later and 2 minutes later to find the signal, gradually increasing the time between, but will keep trying to listen for the signal for up to 2 days. After 20 minutes with no signal received, the remote monitor will turn off the LED's to conserve battery life, but will still be active. After 2 days with no signal received, the remote monitor will shut down untill the reset button is pushed (on back of remote).

The EcoWater Systems remote uses 3 "AA" batteries, which are included. To check batteries, press reset button on back of remote monitor. If batteries are good, the LED's on the remote should scroll green, amber, red. If LED's do not light, batteries need to be changed.

If there is another EcoWater unit within range of the remote, it may cause a conflict with the channel that the remote monitor is receiving. If the remote monitor displays the wrong message (example: low salt when salt is above warning level) this is an indication that the remote monitor is receiving a different signal. Follow the steps below to change the remote channel.

Set Remote Channel: Enter Advanced/Service Menu. Move cursor next to Set Remote Channel and press SELECT/EXIT (↲). Default is random from 1 to 16. Press (↑) or (↓) to select new channel. Press SELECT/EXIT (↲) to exit to the Primary Menu and press reset button on back of remote monitor.

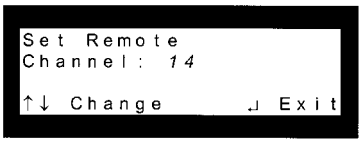

NOTE: This device complies with Part 15 of the FCC Rules. Operation is subject to the following two conditions: (1) this device may not cause harmful interference, and (2) this device must accept any interference received, including interference that may cause undesired operation. Changes or modifications not expressly approved by the party responsible for compliance could void the user's authority to operate the equipment.

NOTE: ALSO SEE SERVICE INFORMATION, PAGES 28 THROUGH 34.

ELECTRONICS

WATER METER:

The water meter consists of a turbine, turbine mounting assembly, and sensor housing. It is located at the valve outlet port, FIG. 6, page 9. As water passes through and spins the turbine, 2 magnets (in the turbine) cause a back-and-forth movement of a switch in the sensor housing. This switch movement sends a pulse to the faceplate controller.

FACEPLATE CONTROLLER:

The faceplate controller is actually a small computer. As it receives pulses from the water meter, it converts them to gallons of water passing through the EcoWater conditioner. It multiplies this water usage information times the water hardness (preprogrammed into the controller) to continually calculate the conditioned water capacity required. The computer adjusts daily to water using habits, seeking to supply conditioned water for the longest time, using the least (and most efficient) amount of salt and water to regenerate.

When the computer determines more capacity is needed, it schedules a regeneration at the next regeneration starting time (2:00AM, or as otherwise preset). RECHARGE TONIGHT shows in the display to inform of the coming regeneration. During vacations, etc., when you are not using water, the EcoWater conditioner will not regenerate.

SERVICE, AND REGENERATION

The EcoWater conditioner is filled with a man-made resin material, called the *resin bed.* The resin looks somewhat like coarse sand, but the beads are round and smooth. Resin has the ability to remove hardness minerals from water by ion-exchange.

SERVICE (FIG. 14):

Hard water enters the EcoWater conditioner, passes through the valve and down into the resin tank and resin bed. As it passes through the bed, hardness minerals are extracted from the water and held by the resin beads. Conditioned water exits the resin tank through the bottom distributor, flows up the internal standpipe, into the valve, and out to the house pipes.

In time, the resin beads hold all the hardness minerals they can, and cleaning with a salt solution (brine) is needed. Regeneration and recharge are words used to describe this cleaning.

REGENERATION, OR RECHARGE:

The faceplate controller determines when a regeneration is needed (see above). Regeneration starts at 2:00AM, or other preselected time, and consists of 5 different steps, or cycles. These are *fill, brining, brine rinse, backwash,* and *fast rinse*.

STEP 1 - FILL CYCLE (FIG. 15): Salt, dissolved in water, is called brine. Brine is the cleaning agent for the resin bed. To make brine, water is needed in the brine tank salt storage area. A controlled water flow to the brine tank takes place during fill.

To enter fill, the EcoWater conditioner valve repositions slightly (motor energized). A valve passage opens allowing *conditioned* water to flow through the nozzle and venturi, to the brine valve, and into the brine tank. Fill cycle length is regulated by the controller, depending upon how much cleaning is needed to remove all hardness minerals, and restore 100% capacity.

continued, page 26

WATER FLOW PATHS

FIGURE 14

SERVICE CYCLE

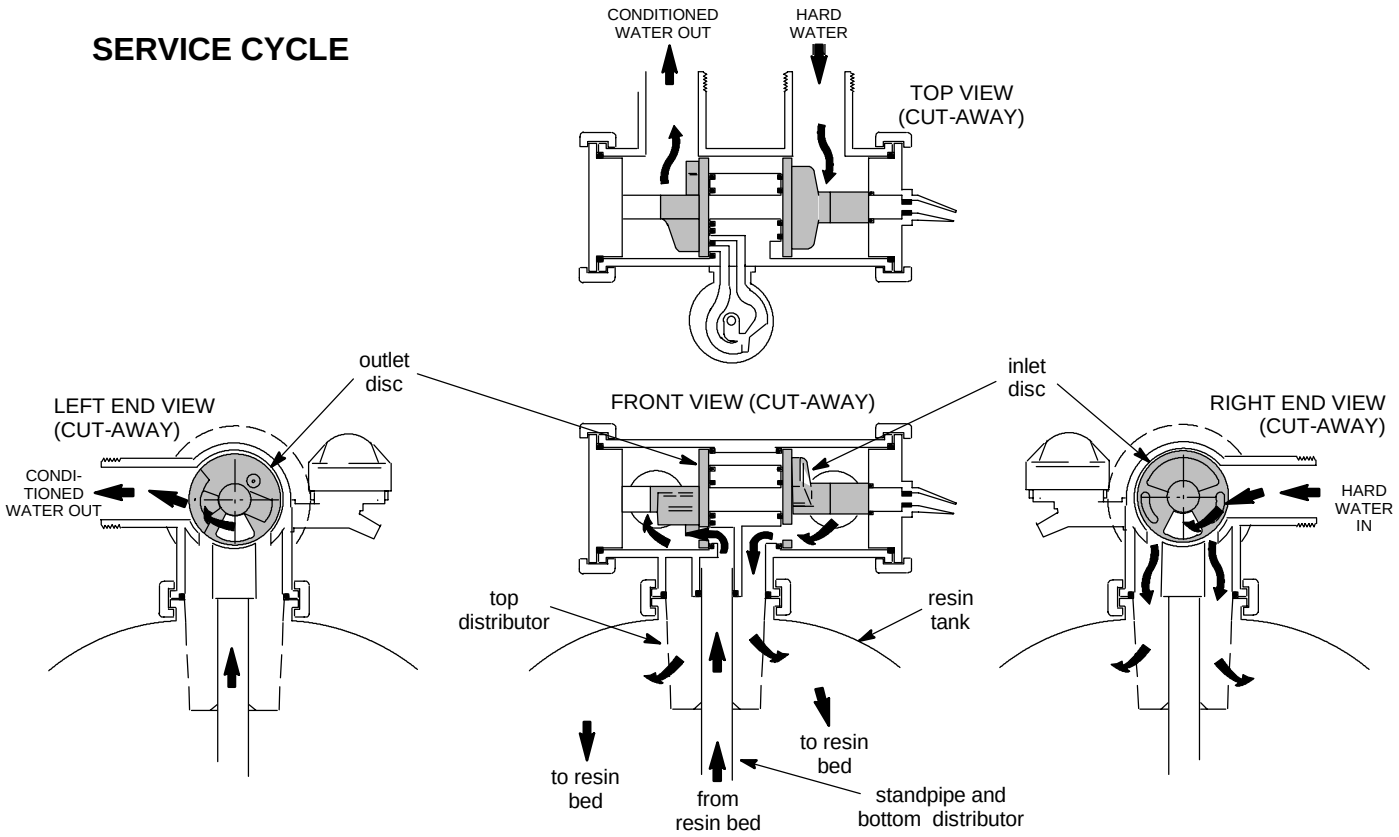

FIGURE 15

FILL CYCLE

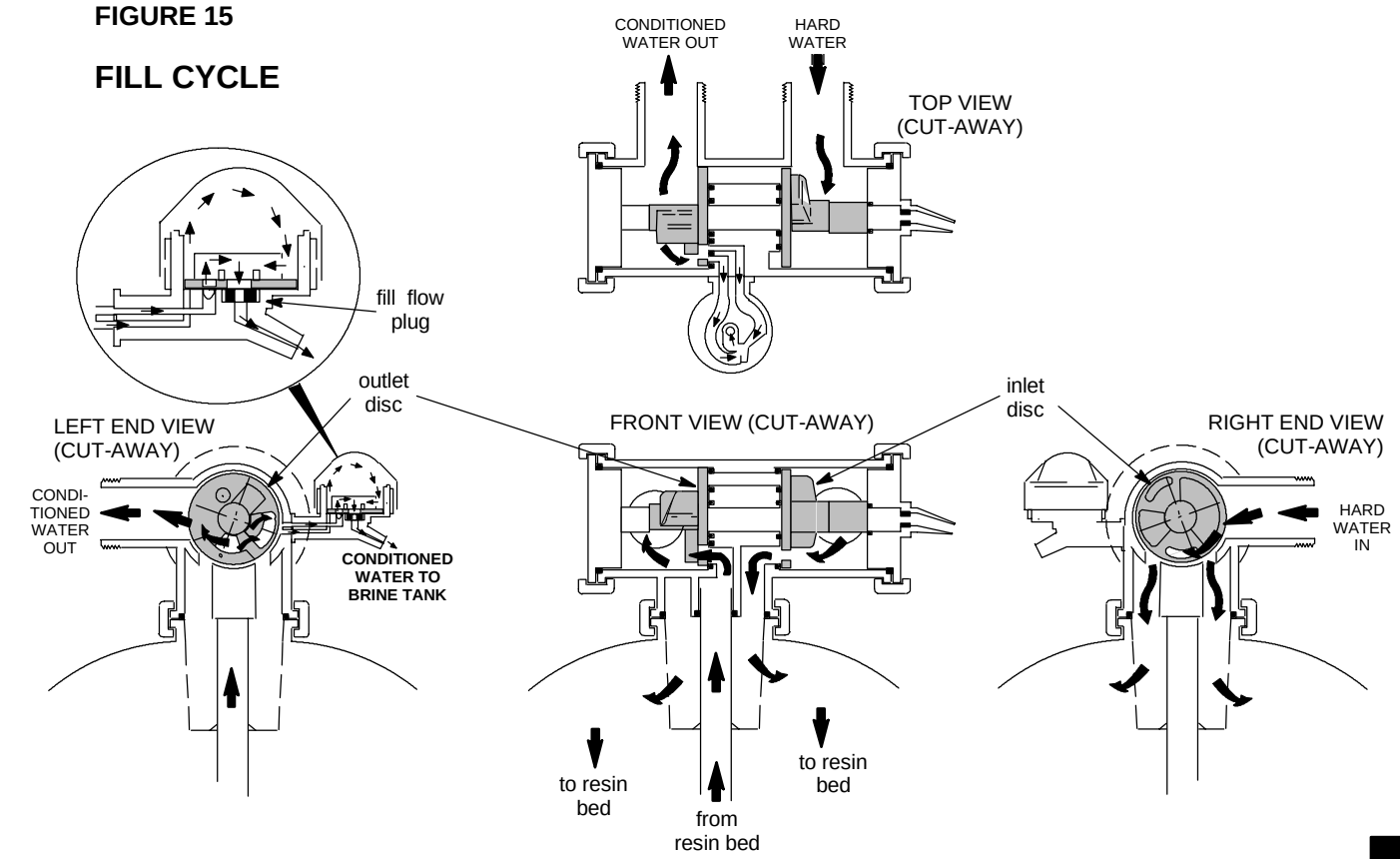

STEP 2 - BRINING CYCLE, and
STEP 3 - BRINE RINSE CYCLE (FIG. 16):

The controller energized motor moves the valve out of fill and into brining. A port opens, routing water to the nozzle. Flow, through the nozzle and into the venturi, creates a suction in the brine tubing and brine valve. The suction pulls brine out of the brine tank, and it mixes with water at the nozzle and venturi. Brine and water flow back into the valve, down the internal standpipe, and into the resin bed. As brine passes through the resin bed, hardness minerals are released from the resin and carried with water flow to the drain.

After all brine is drawn from the brine tank, the brine valve float seats to prevent air induction. Water continues to flow in the same direction except for the discontinued brine flow. Hardness minerals and brine rinse from the resin bed and flow to the drain.

Brining and brine rinse time is also variable and controlled by the controller (see page 33).

BYPASS HARD WATER: During brining and brine rinse (also backwash and fast rinse, page 27), *hard water* is bypassed through the valve and available at house faucets. Avoid using HOT water however, because the water heater will refill with hard water.

WATER FLOW PATH

FIGURE 16

BRINING and BRINE RINSE CYCLES

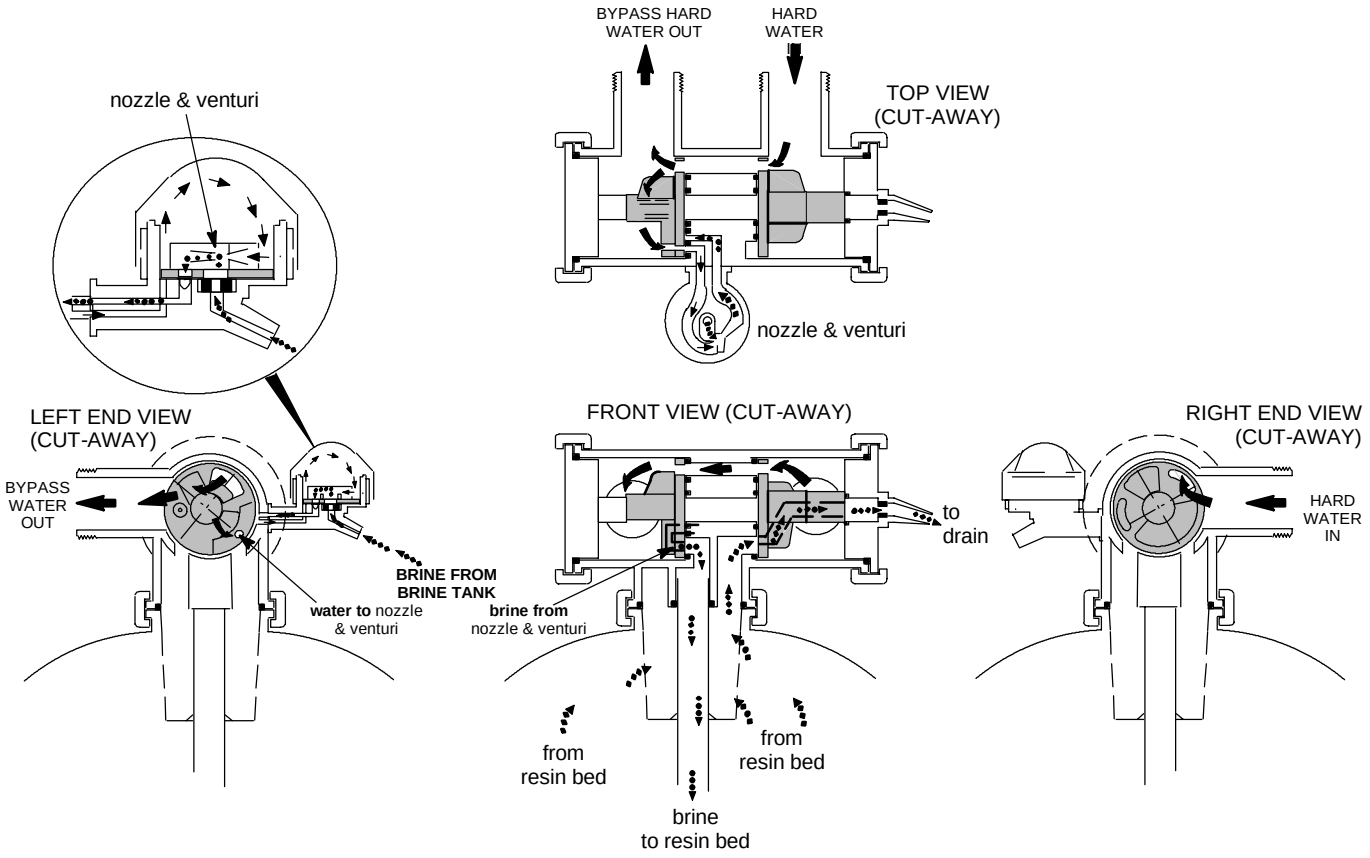

FIGURE 17

STEP 4 - BACKWASH: The motor drives the valve to end brine rinse and begin backwash. In backwash, a fast *upward* flow of water, through the resin bed, flushes remaining hardness minerals, brine, dirt, sediments, iron deposits, etc., from the bed and to the drain. The fast flow lifts and expands the resin bed for maximum cleaning.

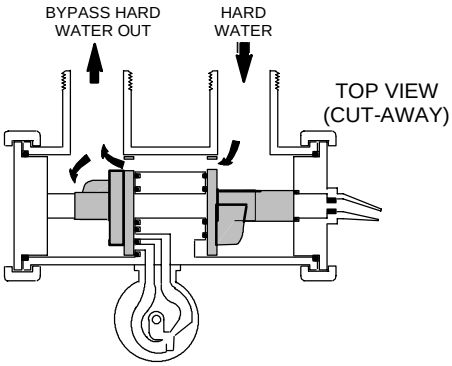

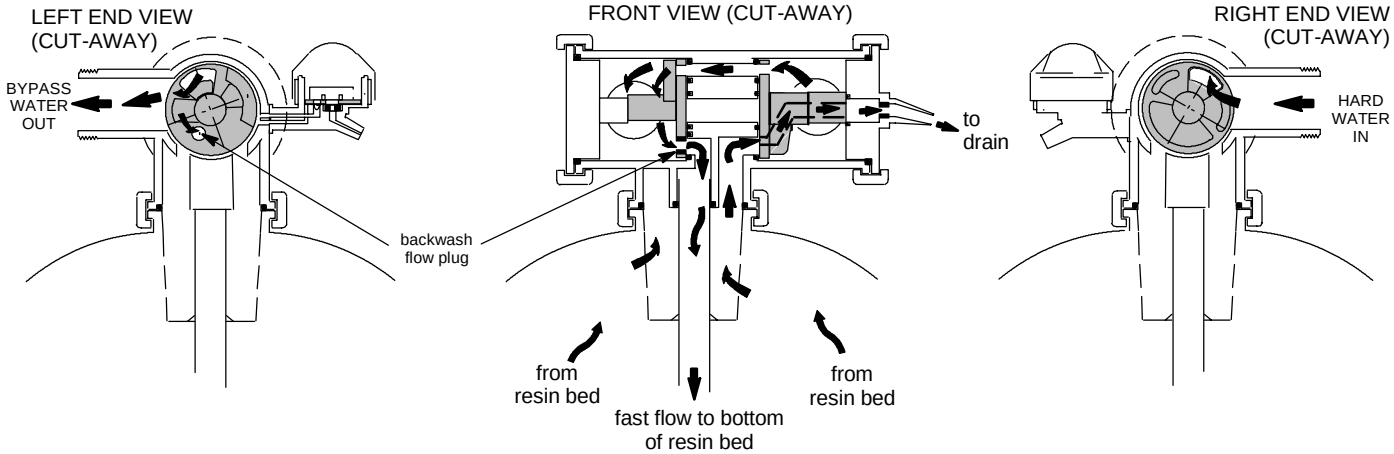

FIGURE 18

STEP 5 - FAST RINSE: After backwash, valve rotation places the valve in fast rinse. The continued fast flow of water changes direction to flow *down* through the resin bed. Any brine, hardness minerals, etc., still at the bottom of the resin bed, are flushed up the standpipe and out the valve to the drain. The resin bed is packed by the fast flow, and prepared for service. The motor is energized a final time to return the valve to service position.

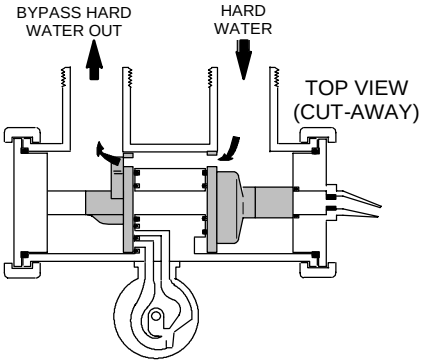

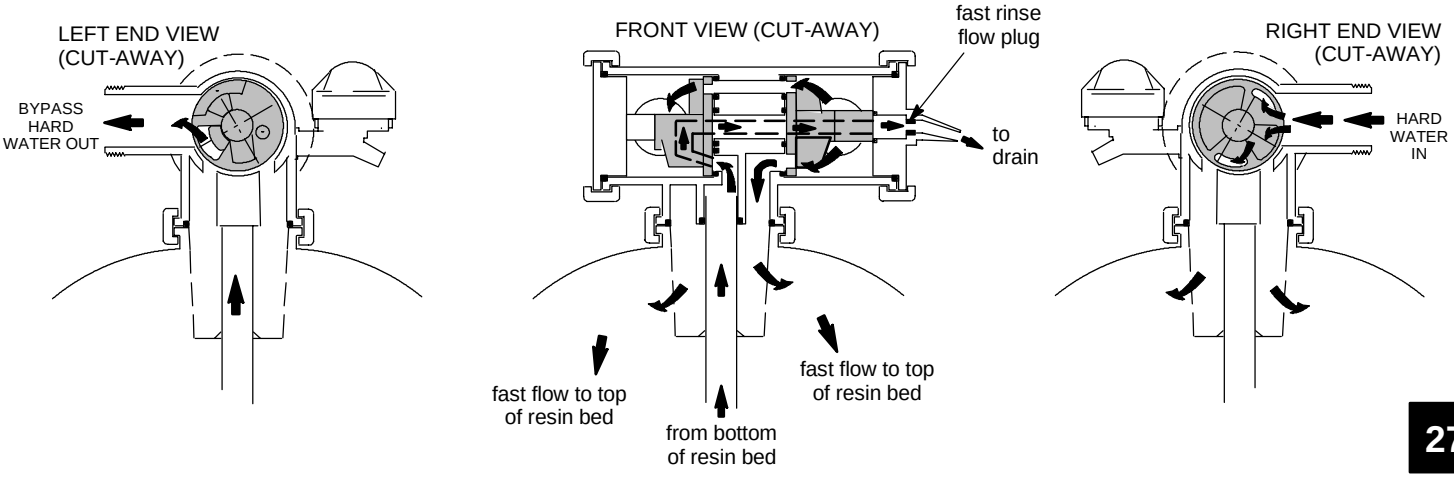

REFILLING WITH SALT

Remove the brine tank cover and check the salt storage level frequently. If the conditioner uses all the salt before you refill it, you will get hard water. **Be sure the brinewell cover is on when refilling with salt.**

RECOMMENDED SALT: Cube, pellet, coarse solar, etc., water conditioner salt is recommended. This type of salt is from high purity evaporated crystals, sometimes formed, or compressed, into briquets. It has less than 1% insoluble (will not dissolve in water) impurities. *Clean, high grade* rock salts are acceptable, but may require frequent brine tank cleaning to remove the ''sludge'' residue (insolubles) that collects at the bottom of the tank.

SALT NOT RECOMMENDED: Rock salt, high in impurities, block, granulated, table, ice melting, ice cream making salts, etc., are not recommended.

SALT WITH IRON REMOVING ADDITIVES: Some salts have an additive to help a water conditioner handle iron in a water supply. Although this additive may help keep the resin bed clean, it may also release corrosive fumes that will weaken and shorten the life of some EcoWater conditioner parts.

BREAKING A SALT BRIDGE

Sometimes, a hard crust or salt bridge forms in the brine tank. It is usually caused by high humidity or the wrong kind of salt. When the salt bridges, an empty space forms between the water and the salt. Then, salt will not dissolve in the water to make brine. Without brine, the resin bed is not regenerated and you will have hard water.

If the brine tank is full of salt, it is hard to tell if you have a salt bridge. Salt is loose on top, but the bridge is under it. Take a broom handle, or like tool, and push it straight down into the salt. If a hard object is felt, it's most likely a salt bridge. *Carefully* push into the bridge in several places to break it.

NOTE: *In humid areas, it is best to keep the salt storage level lower, and to refill more often.*

CLEANING THE NOZZLE AND VENTURI

A clean nozzle and venturi (FIG. 19) is a must for the EcoWater conditioner to work right. This small unit creates the suction to move brine from the brine tank, into the resin tank. If it should become plugged with sand, silt, dirt, etc., the EcoWater conditioner will not work, and you will get hard water.

To get to the nozzle and venturi, remove the conditioner top cover. **Be sure the conditioner is in the service cycle** (no water pressure at nozzle and venturi). Then, holding the nozzle and venturi housing with 1 hand, turn off the cap. *Do not lose the o-ring seal.* Lift out the screen support and screen. Then, remove the nozzle and venturi. Wash the parts in warm, soapy water and rinse in fresh water. If needed, use a small brush to remove iron or dirt. Be careful not to scratch, misshape, etc., surfaces of the nozzle and venturi. Also, check and clean the gasket and flow plug(s) if dirty.

Carefully replace all parts in the correct order. Lubricate the o-ring seal with silicone grease and locate in position. Install and tighten the cap, **by hand only. Do not overtighten** and break the cap or housing.

FIGURE 19

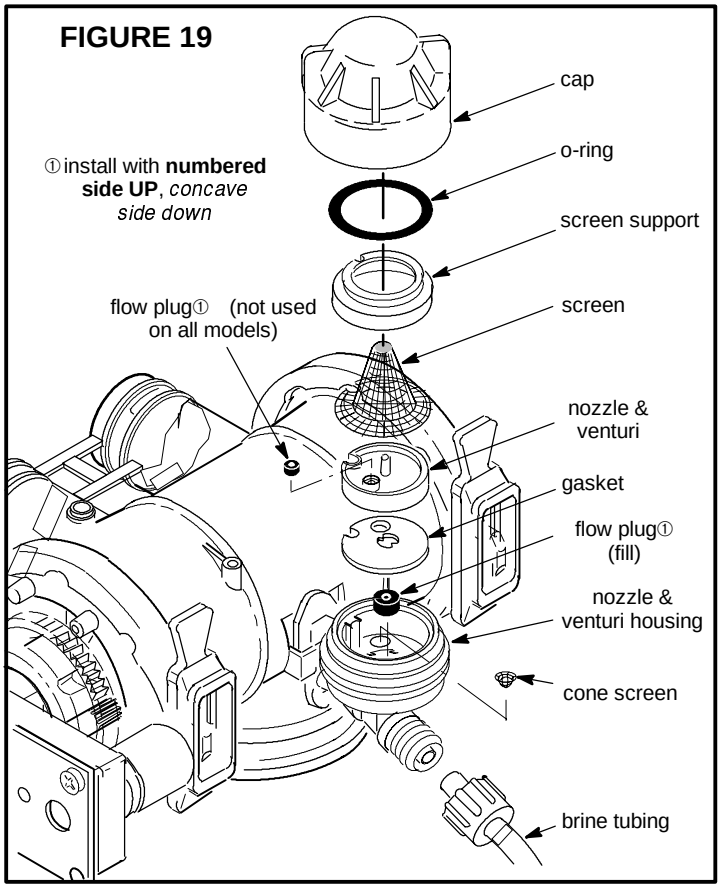

RESIN BED CLEANING

If the water supply contains ‘‘clear water ’’ iron (see page 4), regular resin bed cleaning is needed to keep the bed from coating with iron. Use resin bed cleaner, available from EcoWater, following directions on the container. Clean the resin every 6 months, or more often if iron appears in your conditioned water supply.

ADDING RESIN

Normally, the resin bed (FIG. 20) will last the lifetime of the EcoWater conditioner. However, certain conditions may require partial or total replacement of the resin bed. Some of these conditions are:

(1) damaged top and/or bottom distributors have allowed resin to escape
(2) resin bed iron fouled beyond use
(3) some water supplies cause resin degradation

FIGURE 20

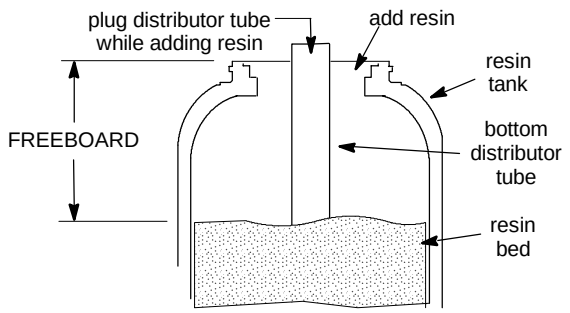

To add more resin, or to replace the entire bed, use the following guides. See resin and gravel requirements on page 33.

MODEL NUMBER	RESIN TANK SIZE	FREEBOARD RANGE*	LBS. RESIN PER INCH BED DEPTH* [1]
ECR3000R20	8 x 35	8.5 - 12.5	1.6
ERR3000R20, ECR3000R30, ECR3002R30	10 x 35	10.5 - 14.5	2.2
ERR3002R30, ECR3002R40	10 x 47	14.5 - 18.5	2.2
ECR3002R70	12 x 54	20 - 24	3.4
ECR3002R50S	12 x 54	27 - 31	3.4

[1] does not include carbon in ERR models

******Freeboard range* and *lbs. of resin per inch bed depth,* in the preceding chart, are provided only as a guide for maintenance when adding to, or if replacing the entire bed with new, fully regenerated, resin with typical moisture content. Freeboard can vary several inches depending on resin bed conditions including...if regenerated or exhausted, total moisture content, settling during shipping and storage, tolerance variables in resin tank size, and amount and type of gravel underbedding.

Each model is factory loaded with the specific pounds or cubic feet of resin required, not by a freeboard measurement. Refer to page 33 for this information.

IMPORTANT NOTES:

Turn off the water supply and relieve pressure...see page 30.

Handle the resin tank carefully. It is heavy when filled with resin and water.

Do not lose o-ring seals or other small parts.

Refer to the assembly instructions, page 6, and to installation steps 1, 12, 14, 15 and 18 to reassemble and restart the unit.

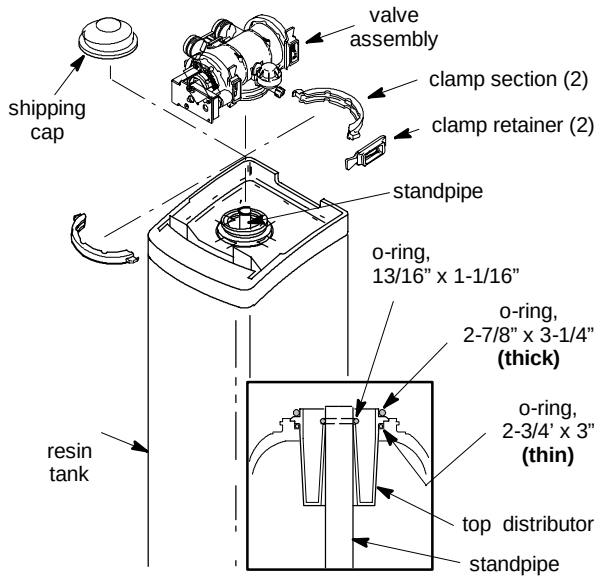

CAUTION: ALWAYS relieve water pressure in the EcoWater conditioner, as follows, before removing parts from the valve or resin tank.

DE-PRESSURIZE

1. Put bypass valve(s) in bypass position.
2. Do Manual Advance step1, page 32, (fill water to brine tank will depressurize the resin tank).

PRESSURIZE

1. Put bypass valve(s) in service position.
2. Do Manual Advance steps 2-5, page 32, to return unit to service.

ALTERNATE METHOD

3-VALVE BYPASS

DE-PRESSURIZE

1. Close the INLET valve.
2. Open HOT and COLD conditioned water house faucets.
3. Close the OUTLET valve and open the BYPASS valve.
4. Close all house faucets.

PRESSURIZE

1. Open HOT and COLD house faucets.
2. Close the BYPASS valve and open the OUTLET valve.
3. Slowly, open the INLET valve.
4. Close all house faucets

ECOWATER BYPASS VALVE

DE-PRESSURIZE

1. Close the house main water supply valve.
2. Open HOT and COLD **conditioned** water faucets.
3. Push the bypass valve handle to bypass position.

Note: For hard water bypass to house faucets, reopen the main water supply valve.

PRESSURIZE

1. Open HOT and COLD house faucets (main water supply valve open).
2. Pull the bypass valve handle to service position.
3. Close all house faucets.

EcoWater Bypass Valve

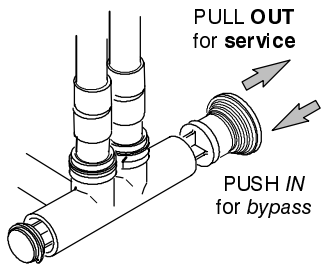

3 - Valve Bypass

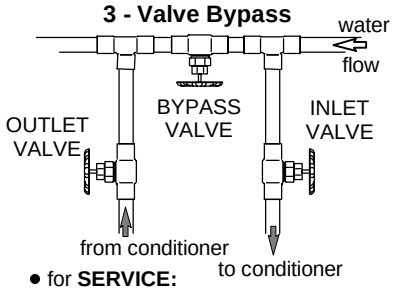

- for **SERVICE:**
  - **Open** the **inlet** and **outlet valves.**
  - **Close** the **bypass valve.**
- for **BYPASS:**
  - **Close** the **inlet** and **outlet valves.**
  - **Open** the **bypass valve.**

ECOWATER CONDITIONER OPERATION, ELECTRONIC CHECKOUT

ALWAYS MAKE THE INITIAL CHECKS FIRST

INITIAL CHECKS:

1. Does the time display show the correct time of day?
...*If display is blank,* check power source to the EcoWater conditioner.
...*If time is incorrect,* power was off for over 2 days. The conditioner resumes normal operation, when power returns, but regenerations occur at the wrong time.
...*If an error code shows* in the display (example: Error 3), go to AUTOMATIC ELECTRONIC DIAGNOSTICS, following.

2. Are plumbing bypass valve(s) in **service** position (all the way open or closed, as applies).

3. Are the inlet and outlet pipes connected to the EcoWater conditioner inlet and outlet respectively.

4. Is the transformer plugged into a ''live'', grounded wall outlet, and the power cable fastened securely?

5. The valve drain hose must be free of kinks and sharp bends, and not elevated over 8' above the floor.

6. Is there salt in the brine tank?

7. Is the brine tubing connected? See FIG. 9, page 10.

8. Press SELECT/EXIT (↲) to enter Primary Menu. Move the cursor so that it is next to Set Hardness. Press the SELECT/EXIT (↲) keypad once to display the hardness setting. Be sure it is the correct setting for the household's water supply. -- Make a hardness test of the raw water and compare with the hardness setting. Also test a conditioned water sample to verify if a problem exists. --Press SELECT/EXIT (↲) keypad to exit to Normal View Screens.

If you do not find a problem after making the initial checks, do MANUAL INITIATED ELECTRONIC DIAGNOSTICS, and the MANUAL ADVANCE REGENERATION CHECK, pages 31 and 32.

E.A.S.E.: EcoWater digital demand controllers have the latest diagnostic technology. With E.A.S.E., or Electronic Automated Service Evaluation, a service person or homeowner can transmit operational data through the telephone, to a personal computer (PC). The PC processes the data to determine if all electrical functions are working normally, or helps to identify a problem should one occur. Ask your participating EcoWater dealer for more information on this feature.

AUTOMATIC ELECTRONIC DIAGNOSTICS

The faceplate computer has a self-diagnostic function for the electrical system (except input power and water meter). The computer monitors electronic components and circuits for correct operation. If a malfunction occurs, the computer attempts to self correct, displaying ADJUST VALVE in the Normal View Screen. If self correction fails, an error code appears in the faceplate display.

```
** Error 1 **
Service Required

↑ EASE ↵ Diagnostics
```

The chart below shows the error codes that could appear, and the possible defects for each code.

While an error code appears in the display, all faceplate keypads are inoperable except the SELECT keypad. SELECT remains operational so the service person can make the MANUAL INITIATED ELECTRONIC DIAGNOSTICS, below, to further isolate the defect, to check the water meter and to send an E.A.S.E. transmission.

CODE	POSSIBLE DEFECT MOST LIKELY ➧----------➧ LEAST LIKELY
Error 1 Error 2 Error 3 Error 4	wiring harness or connection to position switch / switch / valve defect causing high torque / motor inoperative
Error 5	faceplate

PROCEDURE FOR REMOVING ERROR CODE FROM FACEPLATE: 1. Unplug transformer---- 2. Correct defect---- 3. Plug in transformer---- 4. Wait for 8 minutes. The error code will return if the defect was not corrected.

TROUBLESHOOTING, MANUAL INITIATED ELECTRONIC DIAGNOSTICS

1. To enter diagnostics, press the SELECT/EXIT (↵) to enter the menu. This screen contains information that can be used to troubleshoot errors. Use the (↑) and (↓) keypads to scroll through all lines on this screen.

```
** Error 1 **
Service Required

↑ EASE ↵ Diagnostics
```

```
4:45PM Error 0
Pos:BACKWASH    6:43
Req Pos:RINSE
Motor:OFF Sw:OPEN   ↓
```

The first line shows time of day and error code.

Second line is **Pos:** which shows what position the valve is in. Example: Service, Fill, Brining and Brine Rinse, Backwash and Fast Rinse. The clock to the right counts backward the time for each of the positions to be completed.

The next line is **Req Pos:** which is for requested position, or what position the valve is travelling to.

Next line displays **Motor:**, either on or off, and **Sw:** (switch) either open or closed.

Next is **Trbn:** (turbine) and **Gals:** (gallons) which indicate water meter operation as follows.

000 (steady) = conditioned water not in use...no flow through the meter.

-open a nearby CONDITIONED WATER faucet-

000 to 151 (continual) = repeats display for each gallon of water passing through the meter. Gallons up by one.

If you don't get a reading in the display, with a faucet open, pull the sensor housing from the valve outlet port. Pass a small magnet back and forth in front of the sensor. You should get a reading. If you **do get a reading**, disconnect the outlet plumbing and check the turbine for binding. If you **don't get a reading**, the sensor is probably defective.

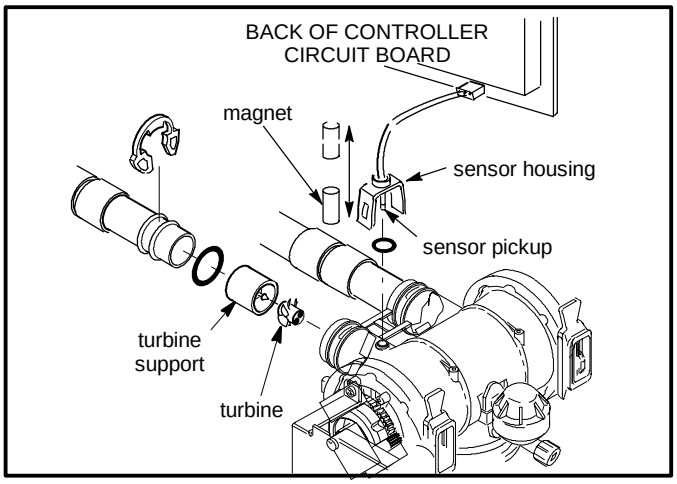

continued

continued from page 31

Use the recharge keypad to manually advance the valve into each cycle and check correct switch operation, and observe the valve position indicator.

NOTE: *The position switch is closed when the plunger is depressed, open when extended.*

While in this diagnostic screen, the following information is available and may be beneficial. This information is retained by the computer from the first time electrical power is applied to the faceplate.

...**Remote:** either Installed or Not Installed.

...**Days:** displays the number of days this faceplate has had electrical power applied.

...**Rchg:** to show the number of regenerations initiated by this faceplate since power was first applied.

NOTE: This number resets to 0 if the model code is changed.

...**Last Rchg:** displays the number of days since last recharge.

...**Cap:** displays numerically the capacity the softener is operating at with 1 lowest and 5 highest.

Press the SELECT/EXIT (↲) to exit to the Advanced/Service menu, move cursor up to EXIT and press SELECT/EXIT (↲) to go to Normal Screen Views.

TROUBLESHOOTING, MANUAL ADVANCE REGENERATION CHECK

This check verifies proper operation of the gearmotor, brine tank fill, brine draw, regeneration flow rates, and other controller functions. *Always make the initial checks, and the manual initiated diagnostics first.*

1. Press the RECHARGE keypad. Move cursor down to Start Rchg Now and press SELECT/EXIT (↲) to start a recharge. As the EcoWater conditioner enters the fill cycle of regeneration, remove the brinewell cover and, using a flashlight, observe fill water entering the tank.

a. If water does not enter the tank, look for an obstructed nozzle and venturi, fill flow plug or brine tubing FIG. 19, page 28.

2. After verifying fill, press Recharge keypad to move the valve into brining*. A slow flow of water to the drain will begin. Verify brine draw from the brine tank by shining the flashlight into the brinewell and observing a noticeable drop in the liquid level.

*If the 2ND BACKWASH option is set, the valve will enter backwash and fast rinse before brining...see page 21.

NOTE: Be sure water is in contact with the salt, and not separated by a salt bridge...see page 28.

a. If the unit does not draw brine, check for...
...dirty or defective nozzle and venturi, page 28
...nozzle and venturi not seated on the gasket, or gasket defective
...restriction in valve drain, causing a back-pressure (bends, kinks, elevated too high, etc.), installation step 8
...obstruction in brine valve or brine tubing, page 6 and FIG. 9, page 10
...inner valve failure (obstructed outlet disc, wave washer defective, etc.)

3. Again press Recharge keypad to move the valve into backwash. Look for a fast flow of water from the drain hose.

a. If flow is slow, check for a plugged top distributor, backwash flow plug or drain hose.

4. Press Recharge keypad to move the valve to fast rinse position. Again look for a fast drain flow. Allow the unit to rinse for several minutes to flush out any brine that may remain from the brining cycle test.

5. To return the valve to service position, press RECHARGE ONCE AGAIN.

continued

MISCELLANEOUS SERVICE INFORMATION											
MODEL CODE		R20+	R20	HR20	R30 2R30	HR30 2H30	2R40	2H40	2R70	2H70	2H50
LBS / CU FT RESIN ❻		38/.71	32 / 0.6 ❼		47 / .88 ❽		59 / 1.12		109/2.05		79/1.5
LBS GRAVEL		10	8		10		10		12		17
FILL CYCLE	❶ TIME	2 - 10	2 - 6		3 - 10		4 - 12		7 - 21		5 - 15
	❷FLOW	.3	.3		.3		.3		.3		.3
BRINE CYCLE	❶ TIME ❸	42 ↕ 63	37 ↕ 58	90 ↕ 103	41 ↕ 63	69 ↕ 108	54 ↕ 91	102 ↕ 141	58 ↕ 92	98 ↕ 152	74 ↕ 114
	❹FLOW	.22	.11		.15		.15		.22		.22
BRINE RINSE CYCLE	❹FLOW	.14	.07		.10		.10		.14		.14
BACKWASH CYCLE	❺TIME	8	8		8		12		13		13
	❹FLOW	1.5	1.0		1.8		1.8		4.0		4.0
FAST RINSE CYCLE	❺TIME	2	2		2		3		4		4
	❹FLOW	3.3	2.4		3.0		3.0		5.4		5.4

❶ minutes, varies with capacity operating level ❷ gallon per minute flow to brine tank ❸ includes brine rinse cycle minutes
❹ gallon per minute flow to drain ❺ factory set default minutes

❻ synthetic high capacity resin - For field replacement, use the following pounds of **standard** / fine mesh resins:
R20 - **30** / 2 R30 - **44** / 3 R40 - **55.5** / 3.5 R50S - **79** / 0 R70 - **102.5** / 6.5

❼ ERR3000R20 models use 35.7/1.9 lbs blended resin, 9.6 lbs of carbon and 10 lbs gravel. ❽ ERR3002R30 models also have 12 lbs of carbon

OTHER SERVICE

HARD WATER BYPASS (hard water "bleeds" into conditioned water supply).

1. Defective inlet disc, seal, or wave washer (see pages 38 and 39).

2. Missing or defective o-ring(s) at resin tank to valve connection.

WATER LEAKS FROM DRAIN HOSE (during service).

1. Defective inlet disc, seal, or wave washer.

2. Defective o-ring on inlet disc shaft.

3. Defective outlet disc, seal, or wave washer.

FLOODED SALT TANK

1. Nozzle venturi plugged.

2. Defective valve seals.

3. Restricted or plugged backwash/fast rinse controls.

4. Restricted or plugged drain line.

WATER HAS SALTY TASTE

1. House water pressure low (adjust pump, if well system).

2. Partially restricted valve drain hose, top distributor, backwash flow plug, resin tank internal riser, or bottom distributor.

WIRING SCHEMATIC

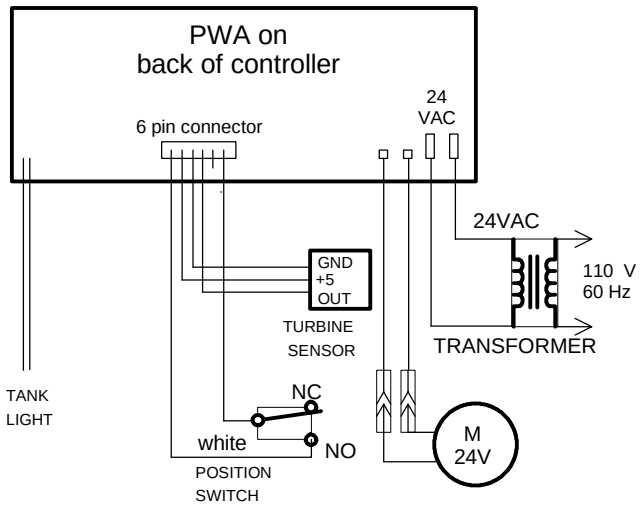

FOR FUTURE REFERENCE, ENTER THE FOLLOWING INFORMATION

MODEL NO. ①② _____ SERIAL NO. ①② _____

DATE CODE ② _____ INSTALLATION DATE _____

WATER HARDNESS_____ GPG IRON CONTENT_____ PPM

WATER HARDNESS SETTING_____ (see page 15)

① on rating decal ② on shipping carton

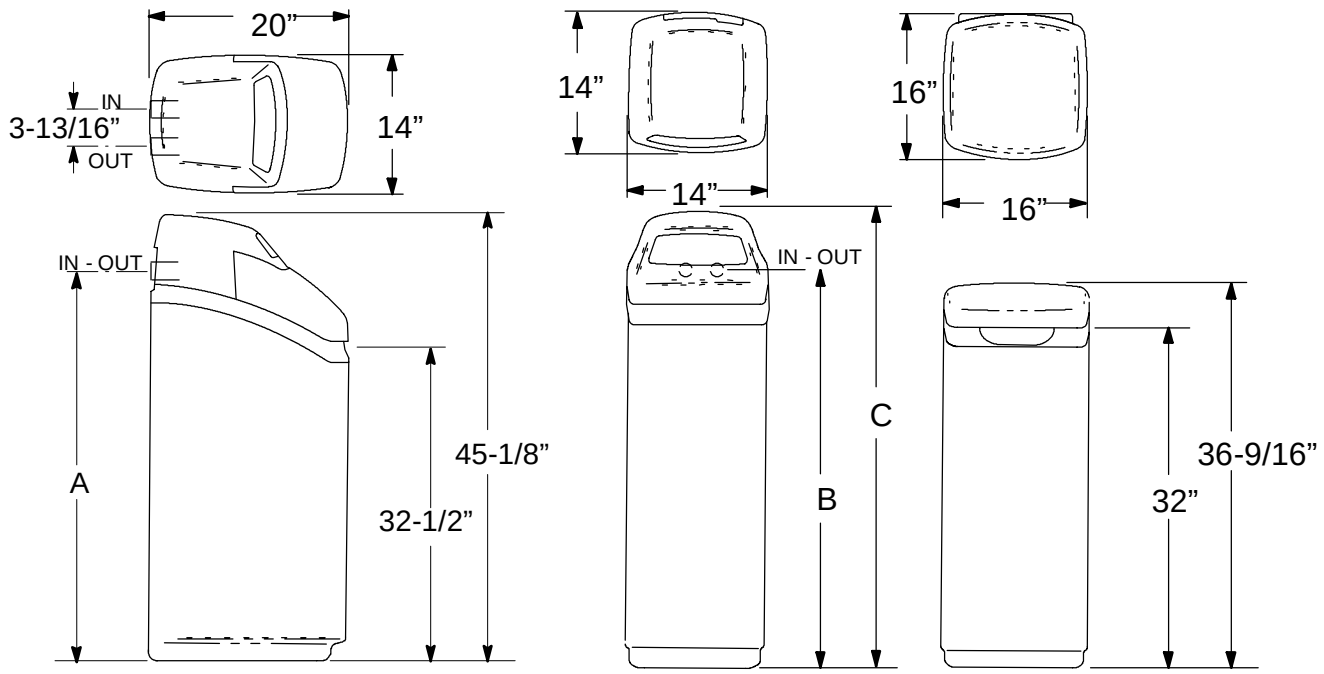

	ECR3000R20	ERR3000R20	ERR3002R30 ECR3000R30 ECR3002R30	ECR3002R40	ECR3002R50S	ECR3002R70
Rated Service Flow Rate	see rating decal on the softener					
Rated Capacity						
Rated Efficiency ◆						
Pressure Drop at Service Flow Rate						
Amount of High Capaciy Resin (cu ft)	0.60	0.71	0.88	1.12	1.5	2.05
Pressure Drop at Rated Service Flow (psig)	9.4	5.5	9.6	11.5	15	9.3
Water Supply Max. Hardness (gpg) @ 500 GPD	40	47	58	72	93	125
Water Supply Max. Clear Water Iron (ppm)	8	10	12	15	15	15
Water Pressure Limits (min./max. psi)	20 - 125					
Min. - Max. Water Temperature (˚F)	40 - 120					
Min. Water Supply Flow Rate (gpm)	3					
Max. Drain Flow Rate (gpm)	2.4	2.4	3.0	3.0	5.4	5.4

These systems conform to ANSI/NSF 44 and ERR3000R20 and ERR3002R30 conform to WQA S-200 for the specific performance claims as verified and substantiated by test data.

◆ Efficiency ratings are only valid at the lowest salt dosage. These softeners were efficiency rated according to ANSI/NSF standard 44.

MODEL	NOMINAL RESIN TANK SIZE	A	B	C
ECR3000R20	8” DIA. X 35”	39.5”	-	-
ECR3000R30, ECR3002R30, ERR3000R20	10” DIA. X 35”	39.5”	39.5”	44.8”
ECR3002R40, ERR3002R30	10” DIA. X 47”	-	51.3”	56.6”
ECR3002R50S, ECR3002R70	12” DIA. X 54”	-	57.1”	62.2”

SALT STORAGE CAPACITIES

- *Two Tank* Brine Tank - 250 lbs
- *Cabinet* Brine Tank - 200 lbs

ECOWATER CONDITIONER ASSEMBLY

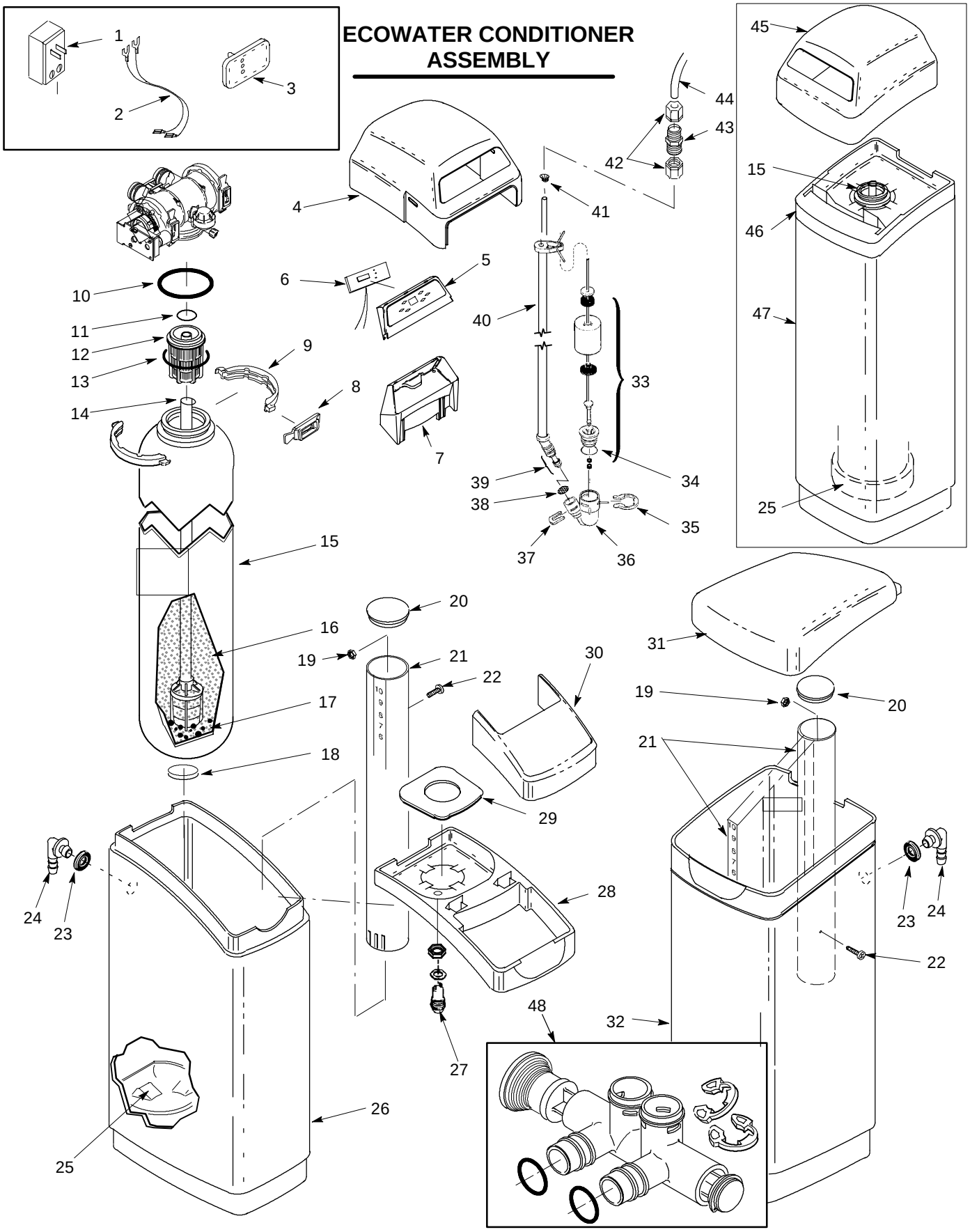

KEY NO.	PART NUMBER	PART DESCRIPTION
1	7095373	Transformer, 24V – 10VA
2	7132840	Power Cable
3	7218777	Remote Indicator (batteries not included)
4	7218662	Top Cover (Cabinet)
5	7210410	Faceplate (order one of following decals)
–	7214684	Faceplate Decal (Cabinet)
–	7218264	Faceplate Decal (Cabinet Refiner)
–	7218272	Faceplate Decal (Two Tank)
–	7218280	Faceplate Decal (Two Tank Refiner)
6	7250274	Rep'l PWA
7	7211173	Faceplate Support
8	7088033	Clamp Retainer, 2 req.
9	7176292	Clamp Section, 2 req.
10	7170296	O – ring Seal, 2 – 7/8" x 3 – 1/4"
11	7170254	O – ring, 13/16" x 1 – 1/16"
12	7077870	Top Distributor
13	7170270	O – ring, 2 – 3/4" x 3"
14	7105047	Repl. Distributor (bottom)
15	7114787	Resin Tank, 8" dia. x 35"
–	7113066	Resin Tank, 10" dia. x 35"
–	7092202	Resin Tank, 10" dia. x 47"
–	7113074	Resin Tank, 12" dia. x 54"
16	0502272	Resin, 1 cu ft (stand. mesh)
–	7052202	Resin, 1 cu ft (fine mesh)
–	0501741	Resin, 1/2 cu ft (stand. mesh)
–	7175149	Shell Carbon (Refiner Models)
17	7124415	Gravel, 17 lbs.
18	1184700	Spacer, Models R20 only
19	7219595	Washer
20	7219888	Brinewell Cover
21	7109871	Brinewell
–	7214236	Decal, Salt Level
22	7219587	Screw
23	9003500	Grommet
24	1103200	Hose Adaptor
–	0900431	Hose Clamp (not shown)
25	7141205	Tank Base
26	7218604	Brine Tank (Cabinet)
27	7218696	Light Assembly (includes o – ring and nut)

KEY NO.	PART-NUMBER	PART DESCRIPTION
28	7210397	Rim (Cabinet)
29	7214244	Vapor Barrier
30	7210389	Salt Hole Cover
31	7210486	Brine Tank Cover
32	7218612	Brine Tank (Two Tank)
33	7113008	Float, Stem and Guide Assembly
–	7221754	Float, Stem & Guide Asm, Model ECR3002R50S, ECR3002R70
34	7170288	O – ring, 15/16" x 1 – 3/16"
35	1205500	Clip
36	7092252	Brine Valve Body
37	7080653	Clip
38	7131365	Screen
39	7113016	Tubing Assembly, BV
40	7095470	Brine Tube
–	7221746	Brine Tube, Model Model ECR3002R50S, ECR3002R70
41	7171349	Screen
42	9003201	Nut – Ferrule, 2 req. ①
43	7094987	Union Connector ①
44	7161807	Tubing, 20 ft.
–	7161768	Tubing, 100 ft.
45	7218670	Top Cover (Two Tank)
46	7210460	Rim (Two Tank)
47	7218638	Tank Sleeve, Model ECR3002R30
–	7218646	Tank Sleeve, Model ERR3002R30, ECR3002R40
–	7218654	Tank Sleeve, Model ECR3002R50S, ECR3002R70
48	7214383	Bypass Valve (includes following)
	7172882	Stem
	7173016	O-ring, 1.11" x 1.387", 4 req.
	7175238	C-ring
	7089306	Clip, 2 req.
	7170262	O-ring, 1-1/8" x 1-3/8", 2 req.
■	7116488	Brine Valve Assem. (incl. key nos. 33 through 41)
■	7220928	Brine Valve Assem. (incl. key nos. 33 through 41) Model Model ECR3002R50S, ECR3002R70
■	7108118	Hose, 1/2" I.D. Drain

① optional parts, not included with conditioner

VALVE ASSEMBLY

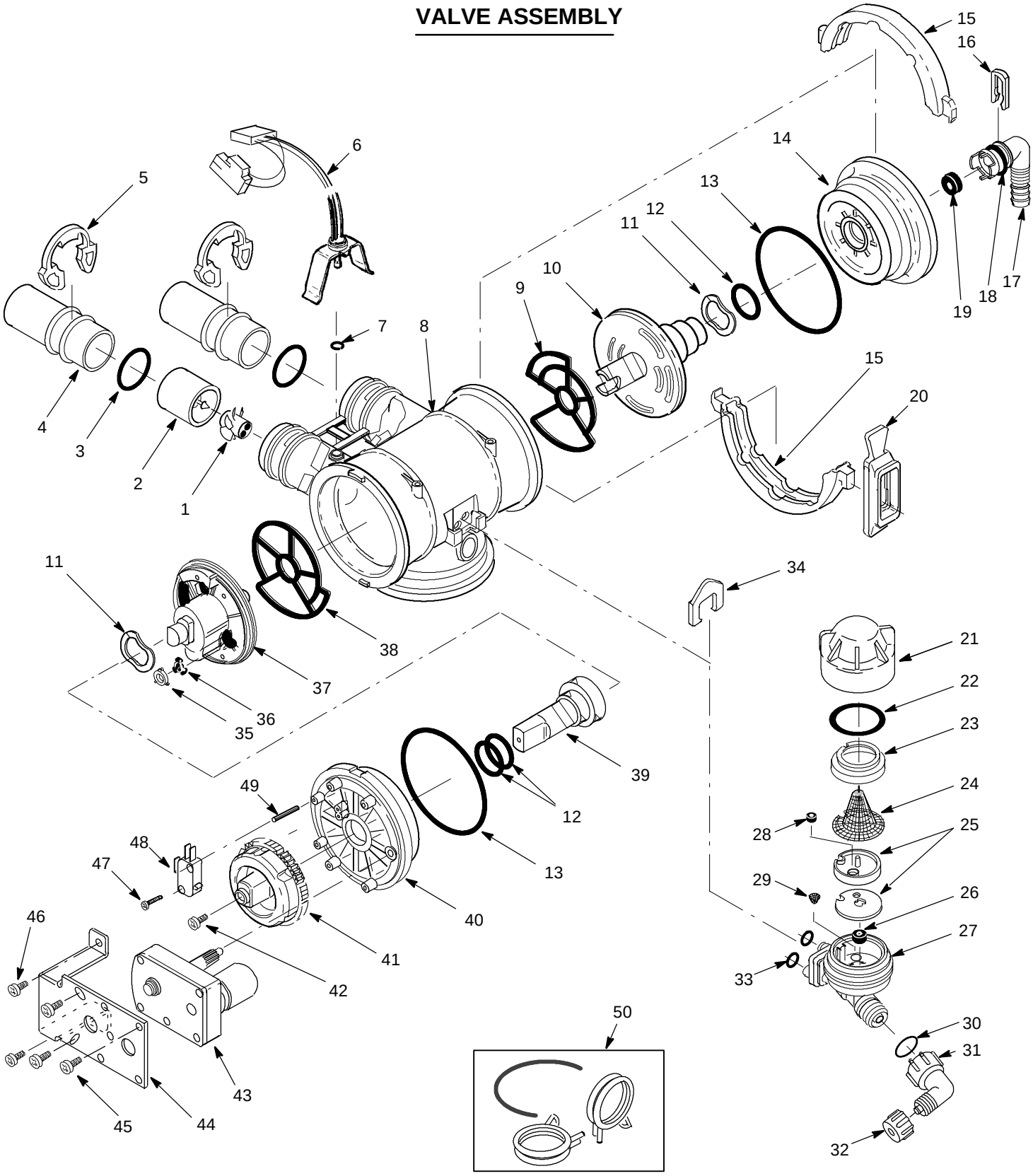

KEY NO.	PART NO.	PART DESCRIPTION
1	7101548	Turbine Asm. (All models except below)
	7123061	Turbine Asm. (ERR3002R30, ECR3002R40, ECR3002R50S, ECR3002R70)
2	7094898	Turb. Mnt. Asm. (All models except below)
	7119177	Turb. Mnt. Asm. (ERR3002R30, ECR3002R40, ECR3002R50S, ECR3002R70)
3	7170262	O – ring, 1.109” x 1.387”, 2 req.
4	7077642	Copper Tube, 2 req.
	7104546	PVC Nipple (optional – not incl.)
5	7089306	Clip Retainer, 2 req.
6	7248722	Sensor Housing (with Pos. Sw. connector)
7	0900060	O – ring, 3/8” x 1/2” [1]
8	7159949	Disc Valve Housing
9	7078282	Inlet End Seal [2]
10	7214286	Inlet Disc [2]
11	7058216	Wave Washer, 2 req.
12	7170220	O – ring, 3/4” x 15/16”, 3 req. [2]
13	7170296	O – ring, 2 – 7/8” x 3 – 1/4”, 2 req.
14	7077498	Inlet End Cap
15	7176292	Clamp Section, 4 req. [3]
16	7142942	Clip
17	7219066	Drain Nipple
–	7141239	Drain Hose Adaptor (optional – not incl.)
18	7170327	O – ring, 5/8” x 13/16”
19	1110600	Flow Washer, 2.5 F.Rns. (ECR3000R20)
–	7097969	Flow Washer, 3.0 F. Rns. (ERR3000R20, ECR3000R30, ECR3002R30, ERR3002R30, ECR3002R40)
–	7097977	Flow Washer, 4.0 F.Rns. (ECR3002R50S, ECR3002R70)
20	7088033	Clamp Retainer, 4 req. [3]
21	7199729	Cap
22	7170262	O – ring, 1 – 1/8” x 1 – 3/8”
23	7167659	Screen Support
24	7146043	Screen
25	7113024	Nozz., Vent. (white) – Gasket Kit (ECR3000R20 [4])
–	7113032	Nozz., Vent. (black) – Gasket Kit (ERR3000R20 [4], ECR3000R30, ECR3002R30, ERR3002R30, ECR3002R40) [5]
–	7114533	Nozz., Vent. (blue) – Gasket Kit (ECR3002R50S, ECR3002R70) [5]
–	7204362	Gasket, only (black)
26	1148800	Fill Flow Plug, .3

KEY NO.	PART NO.	PART DESCRIPTION
27	7085221	Noz., Ven. Assy. (ECR3000R20 [4]) [5]
–	7091866	Nozz., Vent. Assem. (ERR3000R20, ECR3000R30, ECR3002R30, ERR3002R30, ECR3002R40) [5]
–	7085247	Nozz., Vent. Assem. (ECR3002R50S, ECR3002R70) [5]
28	0521829	Flow Plug, .1 (ECR3000R20 [4])
29	7095030	Cone Screen
30	7003847	O – ring, 1/4” x 1/2”
31	7120526	Elbow, 90°
32	1202600	Nut – Ferrule
33	7170319	O – ring, 1/4” x 3/8”, 2 req.
34	7081201	Clip, Nozzle & Venturi
35	7078313	Retainer
36	7104774	Flow Washer, 1.0 Bkw. (ECR3000R20)
–	7104570	Flow Washer, 1.7 Bkw. (ERR3000R20, ECR3000R30, ECR3002R30, ERR3002R30, ECR3002R40) – not used on ECR3002R50S and ECR3002R70
37	7214278	Outlet Disc [2] [6]
38	7078274	Outlet End Seal [2]
39	7091329	Driver, Outlet Disc
40	7159965	Outlet End Cap
41	7147730	Cam and Gear
42	7203104	Washerhead Screw, #8 – 18 x 1/2”
43	7147049	Motor
44	7147057	Motor Bracket
45	7168524	Screw, #10 – 32 x 5/16”, 3 req.
46	7103972	Screw, #8 – 18 x 7/16”, 2 req.
47	7140738	Screw, #4 – 24 x 3/4”
48	7145186	Switch
49	7140746	Expansion Pin
50	7207726	Ground Wire
–	7163427	Clamp, 2 req.

[1] optional - not required
[2] included in Disc Kit, # 7218688
[3] not all parts are shown
[4] Use black nozzle along with key no. 28 flow plug on water pressures of 50 psi and less (ref: Service Bulletin #94068).
[5] includes key nos. 21 - 26 and 29
[6] order key nos. 35 and 36 if needed

EcoWater Systems
PO Box 64420, St. Paul MN 55164-9888
1-800-86WATER