EMC TEST REPORT

Kyocera Wireless Corp.

TRI-MODE CELLULAR MOBILE PHONE

Model: **KX160B**

RADIATED EMISSIONS

FCC, PART 2.1053

FCC, PART 22 SUBPART H

FCC, PART 24 SUBPART E

INDUSTRY CANADA, RSS-129

INDUSTRY CANADA, RSS-133

TEST REPORT # 2005 080713 KX160B FCC

25-713-KYO

NEMKO USA, INC.
11696 SORRENTO VALLEY ROAD SUITE F
SAN DIEGO, CA 92121
PHONE: 858-755-5525

TABLE OF CONTENTS

1. DESCRIPTION OF TESTING METHODS.....7
2. TEST RESULTS 14

TEST SETUP DIAGRAMS

FIGURE 1. GENERAL EUT TEST SETUP PICTURE 10
FIGURE 2. RADIATED EMISSIONS TEST SETUP DIAGRAM.....12

TEST CONFIGURATION PHOTOGRAPHS

PHOTOGRAPH 1. KX160B, TRI MODE MOBILE CELLULAR PHONE (OPEN) 8
PHOTOGRAPH 2. KX160B, TRI MODE MOBILE CELLULAR PHONE (CLOSED) 9
PHOTOGRAPH 3. FCC, PART 22/24 RADIATED EMISSIONS TEST CONFIGURATION 20
PHOTOGRAPH 4. FCC, PART 22/24 RADIATED EMISSIONS TEST CONFIGURATION 21
PHOTOGRAPH 5. FCC, PART 22/24 RADIATED EMISSIONS TEST CONFIGURATION 22

APPENDICES

A. RADIATED EMISSIONS MEASUREMENT UNCERTAINTIES 23
B. NEMKO USA, INC.'S TEST EQUIPMENT & FACILITIES CALIBRATION PROGRAM.....25

EMC Test Report
For
Kyocera Wireless Corp.

Test Number : 25-713-KYO

Product Name : TRI-MODE CELLULAR MOBILE PHONE

Regulation : FCC, Part 22, Subpart H, Part 24, Subpart E
: Industry Canada, RSS-129, RSS-133

Date : SEPTEMBER 12, 2005
Report Reviewed
Accepted by: _____

Kyocera Wireless Corp.
10300 Campus Point Drive
San Diego, CA 92121
Phone: **858 882-2879**
Fax: **858 882-2010**

Report Issued By: *F. R. Fluery*
F. R. Fluery, Frontline Manager

Tested By: _____
Mike Krumweide, EMC Test Engineer

Administrative Data

Regulation : FCC, Part 22, Subpart H, Part 24, Subpart E
: Industry Canada, RSS-129, RSS-133

Level : Not Applicable

Test Method : ANSI C63.4 – 2003
: CSA C108. - M1983
: TIA/EIA 603B

Test Type : Certification
Manufacturer : Kyocera Wireless Corp.
EUT Type/:Model # : KX160B
Date(s) of Test : August 16, 2005 to August 18, 2005
Customer Personnel : John Turner, Engineer

Nemko Personnel : Mike Krumweide, EMC Test Engineer
:
Test Location : OPEN Area Test Site
Nemko USA, Inc.
11696 Sorrento Valley Road, Suite F
San Diego, CA 92121

EUT Description

The KX160B is a TRI-MODE CELLULAR MOBILE PHONE with Bluetooth capabilities. Its function is to provide communication for mobile phone users. The EUT was placed into FM Transmit, PCS Transmit and CDMA Transmit modes on High, Mid and Low channels for fundamental and harmonics emissions measurements.

DEVICE	MANUFACTURER MODEL # SERIAL #	POWER CABLE
EUT - TRI-MODE CELLULAR MOBILE PHONE	Kyocera Wireless Corp. Model: KX160B SN: A1DX----1CSC0X	N/A

CONNECTION	I/O CABLE
None	

REASON FOR TEST

The EUT was tested to qualify for FCC Part 22 and Part 24, and RSS-133.

CHANGES MADE DURING TEST

The following design modifications were made to the EUT during testing.

No design modifications were made to the EUT during testing.

DEVIATIONS FROM STANDARD TEST METHOD

-- None

CERTIFICATION AND TEST SUMMARY

Test Type	***In Accordance with Document***	***Frequency Range Investigated***	***EUT Complies***
Radiated Spurious Emissions	FCC, Part 22, Subpart H, Part 24, Subpart E Industry Canada, RSS-129, RSS-133	824 – 19990 MHz	PASS

The TRI-MODE CELLULAR MOBILE PHONE complied with FCC Part 15.109, Part 15.209, Part 22 and Part 24; Industry Canada, RSS129 and RSS-133 when tested in the system configuration defined herein.

1. DESCRIPTION OF TEST SITE AND EQUIPMENT

1.1. Description of Test Site

The test site is located at 11696 Sorrento Valley Road, Suite F, San Diego, CA 92121. The site is physically located 18 miles Northwest of downtown San Diego. The general area is a valley 1.5 miles east of the Pacific Ocean. This particular part of the valley tends to minimize ambient levels, i.e. radio and TV broadcast stations and land mobile communications. The three and ten-meter Open Area Test Site (OATS) is located behind the office/lab building. It conforms to the normalized site attenuation limits and construction specifications as set in the EN 55022 (1998), CISPR 16 (2000) and 22 (1997) and ANSI C63.4 (2003) documents. The OATS normalized site attenuation characteristics are verified for compliance every.

DESCRIPTION OF TESTING METHODS

1.2. Introduction

As required in 47 CFR, Parts 2 and 15, the methods employed to test the radiated and conducted emissions (as applicable) of the EUT are those contained within the American National Standards Institute document ANSI C63.4 (2003), titled "Methods of Measurement of Radio-Noise Emissions from Low-Voltage Electrical and Electronic Equipment in the Range of 9 kHz to 40 GHz." All applicable FCC Rule Sections that provide further guidance for performance of such testing are also observed.

For General Test Configuration please refer to Figure 1 on the following page.

Digital devices sold in Canada are required to comply with the Interference Causing Equipment Standard for Digital Apparatus, ICES-003. These test methods and limits are specified in the Canadian Standards Association's (CSA) Standard C108.8-M1983 (1-1-94 version) and are "essentially equivalent" with FCC, Part 15 and CISPR 22 (EN55022) rules for unintentional radiators per EMCAB-3, Issue 3 (May 1998). No further testing is required for compliance to ICES-003.

Photograph 1. KX160B, Tri Mode Mobile Cellular Phone (Open)

Photograph 2. KX160B, Tri Mode Mobile Cellular Phone (Closed)

Figure 1. General EUT Test Setup Picture

CONFIGURATION LEGEND

1. EUT: TRI-MODE CELLULAR MOBILE PHONE (Open mode shown)
2. 80cm Non-Conductive Support Table

1.3. Configuration and Methods of Measurements for Radiated Emissions

Section 8 of ANSI C63.4 determines the general configuration and procedures for measuring the radiated emissions of equipment under test. Initially, the primary emission frequencies are identified inside the test lab by positioning a broadband receive antenna one meter from the EUT to locate frequencies of significant radiation. Next, the EUT and associated system are placed on a turntable on a ten meter open area test site (registered with the FCC in accord with its Rules and ANSI C63.4) and the receive antenna is located at a distance of ten meters from the EUT.

The EUT and associated system are configured to operate continuously, representing a "normally operating" mode. All significant radiated emissions are recorded when maximum radiation on each frequency is observed, in accordance with part 8 of ANSI C63.4 and Section 15.33 of the FCC Rules. To ensure that the maximum emission at each discrete frequency of interest is observed, the receive antenna is varied in height from one to four meters and rotated to horizontal and vertical polarities, and the turntable is also rotated to determine the worst emitting configuration. The numerical results of the test are included herein to demonstrate compliance.

The numerical results that are applied to the emissions limits are arrived at by the following method:
Example: A=RR+CL+AF
A = Amplitude dBuV/M
RR = Receiver Reading dBuV
CL = cable loss dB
AF = antenna factor dBm-1

Example Frequency = 110MHz
18.5 dBuV (spectrum analyzer reading)
+3.0 dB (cable loss @ frequency)
21.5 dBuV
+15.4 dBm-1 (antenna factor @ frequency)
36.9 dBuV/M Final adjusted value

The final adjusted value is then compared to the appropriate emission limit to determine compliance.

For Radiated Emissions Test Configuration please refer to Figure 4 on the following page.

Figure 2. Radiated Emissions Test Setup Diagram

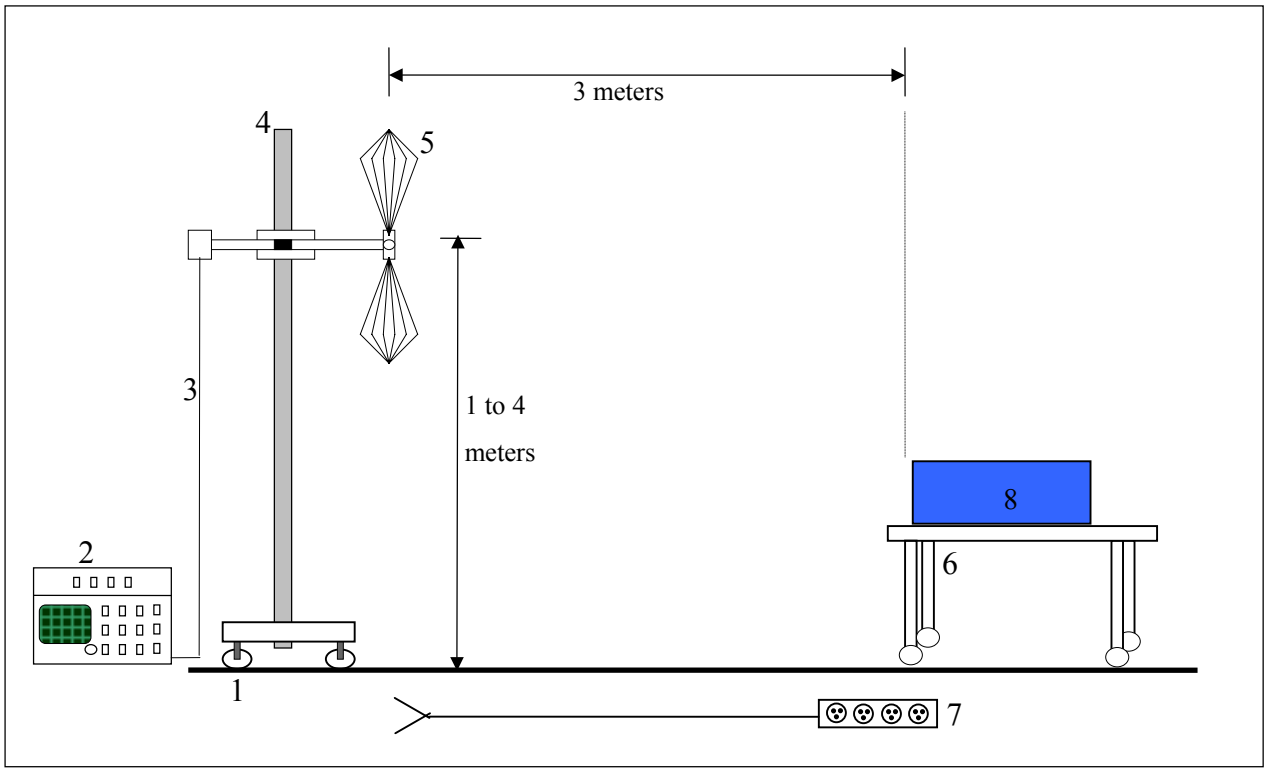

NOT TO SCALE

CONFIGURATION LEGEND

1. Ground plane (11 X 17 meters)
2. Spectrum Analyzer with Quasi-Peak Adapter
3. Coax interconnect from Receive Antenna to Spectrum Analyzer
4. Antenna Mast with motorized mounting assembly
5. Receive Antenna (basic relative position)
6. Non-Conducting table 80 cm above ground plane
7. AC power for devices
8. EUT: TRI-MODE CELLULAR MOBILE PHONE

Fundamental transmit frequencies were tested on 3 orthogonal axes to determine maximum amplitude position. This worst-case axis was then used to measure harmonics and recorded. Test setup pictures of these axes are found further in this report.

Figure 3. Substitution Method Test Setup Diagram

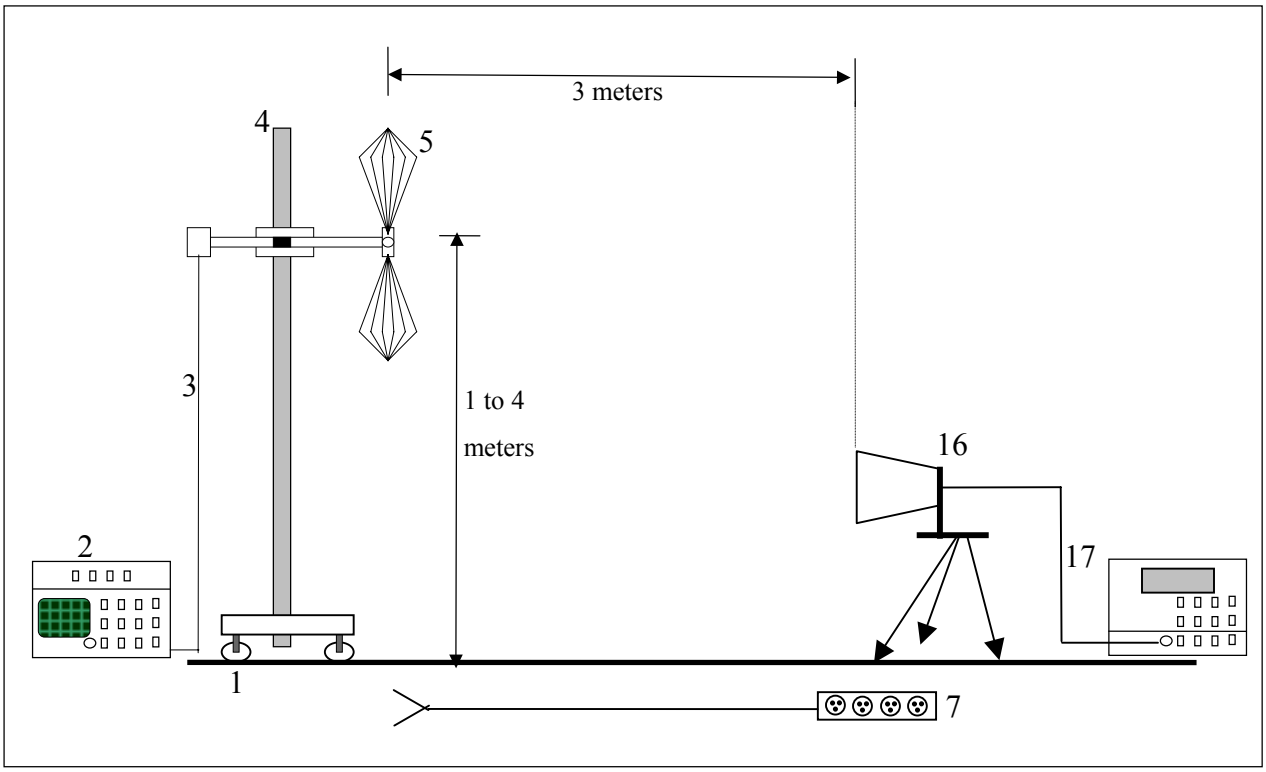

NOT TO SCALE

CONFIGURATION LEGEND

9. Ground plane (11 X 17 meters)
10. Spectrum Analyzer with Quasi-Peak Adapter
11. Coax interconnect from Receive Antenna to Spectrum Analyzer
12. Antenna Mast with motorized mounting assembly
13. Receive Antenna (basic relative position)
14. Non-Conducting table 80 cm above ground plane
15. AC power for devices
16. Radiating Horn Antenna
17. Signal Generator

2. Test Results

2.1. Radiated Emissions Test Data

FCC Part 2, 22 & 24 Emissions Substitution

1) Methodology Used: TIA/EIA603 (see attached excerpt).

2) The Substitution Method is used for fundamental power levels and spurious emissions when RF emission signals are measured within 20 dB of the limit.

3) Formula Used to calculate the values:
   a) Measured value + antenna factor + cable loss - preamplifier = Max Level
   b) Margin = Max level - Limit
   c) Signal Generator power level - cable loss + antenna gain = ERP Part 22 or EIRP Part 24
   d) Substituted Margin = ERP (or EIRP) - Limit
   Note: gain for dipole = 0; antenna factor is not the same as antenna gain

Note: The signal generator power level is the power required when transmitting into the substituting antenna to duplicate the Measured Value. Substituted margin is reported in 731 forms pertaining to certification grants and Class II Permissive Changes when a direct conducted power reading cannot be performed.

Note: Per FCC Part 2:1051 the FCC does not require reporting of Spurious Emissions when they are more than 20dB below the permissible limit, therefore no signal substitution measurements will be performed on these signals.

Radiated Emissions Data

Job # : 25-713-KYO Test # : 1
Page 1 of 1

Client Name : Kyocera-Wireless
EUT Name : Cellular Phone
EUT Model # : KX160B
EUT Serial # : A1DX----1CSC0X
EUT Config. : FM TX Harmonics

Specification : FCC Part 22 Reference :

Rod. Ant. #:		Temp. (°C) :	18	Date :	08/25/05
Bicon Ant.#:		Humidity (%) :	68	Staff :	Mike Krumweide
Log Ant.#:	112	EUT Voltage :	NA	Peak Bandwidth:	1 MHz
DRG Ant. #	752	EUT Frequency :	NA	Video Bandwidth	1 MHz
Dipole Ant.#:	758	Phase:	NA		
Cable#:	40ft	Location:	RN # 329550-01		
Preamp#:	842	Distance:	3m		
Spec An.#:	835	ERP conversion factor	7		

Meas. Freq. (MHz)	Vertical (dBuV) pk	Horizontal (dBuV) pk	CF (db)	Max Level (dBm) pk	Spec. Limit (ERP) (dBm) pk	Margin dB pk	EUT Rotation	Ant. Height	Pass Fail Unc.	Comment
1648.08	64.0	57.6	-19.5	-52.8	-13.0	-39.8			Pass	*
2472.12	71.3	63.8	-15.7	-41.7	-13.0	-28.7			Pass	*
3296.16	60.7	57.6	-10.2	-46.8	-13.0	-33.8			Pass	*
4120.20	51.4	51.1	-5.4	-51.2	-13.0	-38.2			Pass	*
4944.24			-5.4		-13.0					NF
5768.28			-1.3		-13.0					NF
6592.32			0.6		-13.0					NF
7416.36			3.7		-13.0					NF
8240.40			7.0		-13.0					NF
9064.44			10.3		-13.0					NF
1672.98	55.4	53.4	-19.5	-61.4	-13.0	-48.4			Pass	*
2509.47	65.1	66.7	-15.4	-46.0	-13.0	-33.0			Pass	*
3345.96	58.7	57.0	-10.2	-48.8	-13.0	-35.8			Pass	*
4182.45			-5.4		-13.0					NF
5018.94			-1.5		-13.0					NF
5855.43			-1.3		-13.0					NF
6691.92			0.6		-13.0					NF
7528.41			3.9		-13.0					NF
8364.90			7.0		-13.0					NF
9201.39			10.3		-13.0					
1697.94	56.6	53.5	-19.5	-60.2	-13.0	-47.2			Pass	*
2546.91	66.5	68.5	-15.4	-44.2	-13.0	-31.2			Pass	*
3395.88	58.9	56.5	-10.2	-48.6	-13.0	-35.6			Pass	*
4244.85			-5.4		-13.0					NF
5093.82			-1.5		-13.0					NF
5942.79			-1.3		-13.0					NF
6791.76			0.6		-13.0					NF
7640.73			3.9		-13.0					NF
8489.70			7.0		-13.0					NF
9338.67			10.3		-13.0					

* = Signal Measured NF = Noise Floor, no signal observed, even at lower RBW.

Radiated Emissions Data

Job # : 25-713-KYO Test # : 2
Page 1 of 1

Client Name : Kyocera-Wireless
EUT Name : Cellular Phone
EUT Model # : KX160B
EUT Serial # : A1DX----1CSC0X
EUT Config. : CDMA TX Harmonics

Specification : FCC Part 22 Reference :

Rod. Ant. #:	0	Temp. (°C) :	18	Date :	08/25/05
Bicon Ant.#:	0	Humidity (%) :	68	Staff :	Mike Krumweide
Log Ant.#:	112	EUT Voltage :	NA	Peak Bandwidth:	1 MHz
DRG Ant. #	752	EUT Frequency :	NA	Video Bandwidth	1 MHz
Dipole Ant.#:	758	Phase:	NA		
Cable#:	40ft	Location:	RN # 329550-01		
Preamp#:	842	Distance:	3m		
Spec An.#:	835	ERP conversion factor	7		

Meas. Freq. (MHz)	Vertical (dBuV) pk	Horizontal (dBuV) pk	CF (db)	Max Level (dBm) pk	Spec. Limit (ERP) (dBm) pk	Margin dB pk	EUT Rotation	Ant. Height	Pass Fail Unc.	Comment
1649.40	59.8	56.2	-19.54	-57.0	-13.0	-44.0			Pass	*
2474.10	72.2	69.8	-15.7	-40.8	-13.0	-27.8			Pass	*
3298.80	62.3	59.3	-10.24	-45.2	-13.0	-32.2			Pass	*
4123.50			-5.352		-13.0					NF
4948.20			-5.352		-13.0					NF
5772.90			-1.271		-13.0					NF
6597.60			0.5822		-13.0					NF
7422.30			3.7067		-13.0					NF
8247.00			6.9678		-13.0					NF
9071.7			10.299		-13.0					
1672.98	63.4	56.4	-19.54	-53.4	-13.0	-40.4			Pass	*
2509.47	75.3	76.2	-15.4	-36.5	-13.0	-23.5			Pass	*
3345.96	57.6	55.2	-10.24	-49.9	-13.0	-36.9			Pass	*
4182.45			-5.352		-13.0					NF
5018.94			-1.471		-13.0					NF
5855.43			-1.271		-13.0					NF
6691.92			0.5822		-13.0					NF
7528.41			3.9067		-13.0					NF
8364.90			6.9678		-13.0					NF
9201.39			10.299		-13.0					
1696.62	57.7	54.0	-19.54	-59.1	-13.0	-46.1			Pass	*
2544.93	77.1	78.0	-15.4	-34.7	-13.0	-21.7			Pass	*
3393.24	59.1	57.3	-10.24	-48.4	-13.0	-35.4			Pass	*
4241.55			-5.352		-13.0					NF
5089.86			-1.471		-13.0					NF
5938.17			-1.271		-13.0					NF
6786.48			0.5822		-13.0					NF
7634.79			3.9067		-13.0					NF
8483.10			6.9678		-13.0					NF
9331.41			10.299		-13.0					

* = Signal Measured NF = Noise Floor, no signal observed, even at lower RBW.

Radiated Emissions Data

Job # : 25-713-KYO Test # : 3
Page 1 of 1

Client Name : Kyocera-Wireless
EUT Name : Cellular Phone
EUT Model # : KX160B
EUT Serial # : A1DX----1CSC0X
EUT Config. : PCS TX Harmonics

Specification : FCC Part 24 Reference :

Rod. Ant. #:	0	Temp. (°C) :	18	Date :	08/25/05
Bicon Ant.#:	0	Humidity (%) :	68	Staff :	Mike Krumweide
Log Ant.#:	112	EUT Voltage :	NA	Peak Bandwidth:	1 MHz
DRG Ant. #	752 625	EUT Frequency :	NA	Video Bandwidth	1 MHz
Dipole Ant.#:	758	Phase:	NA		
Cable#:	40ft	Location:	RN # 329550-01		
Preamp#:	842	Distance:	3m		
Spec An.#:	835	EIRP conversion factor	5.5		

Meas. Freq. (MHz)	Vertical (dBuV) pk	Horizontal (dBuV) pk	CF (db)	Max Level (dBm) pk	Spec. Limit (ERIP) (dBm) pk	Margin dB pk	EUT Rotation	Ant. Height	Pass Fail Unc.	Comment
3702.50	33.3	31.0	36.7	-25.3	-13.0	-12.3			Pass	* NO PREAMP
5553.75	62.7	61.6	-1.3	-33.8	-13.0	-20.8			Pass	*
7405.00	52.4	53.3	3.7	-38.3	-13.0	-25.3			Pass	*
9256.25	49.3	47.3	10.3	-35.7	-13.0	-22.7			Pass	*
11107.50			15.1		-13.0					NF
12958.75			16.6		-13.0					NF
14810.00			21.5		-13.0					NF
16661.25			23.9		-13.0					NF
18512.50			37.8		-13.0					NF
20363.75			38.5		-13.0					NF
3760.00	28.2	27.0	36.7	-30.4	-13.0	-17.4			Pass	* NO PREAMP
5640.00	61.2	61.7	-1.3	-34.8	-13.0	-21.8			Pass	*
7520.00	50.4	52.1	3.9	-39.3	-13.0	-26.3			Pass	*
9400.00	48.4	47.8	10.3	-36.6	-13.0	-23.6			Pass	*
11280.00			15.1		-13.0					NF
13160.00			20.4		-13.0					NF
15040.00			21.3		-13.0					NF
16920.00			23.9		-13.0					NF
18800.00			37.9		-13.0					NF
20690			38.6		-13.0					NF
3817.50	60.0	57.0	-9.1	-44.4	-13.0	-31.4			Pass	*
5726.25	57.0	58.4	-1.3	-38.1	-13.0	-25.1			Pass	*
7635.00	49.9	49.7	3.9	-41.5	-13.0	-28.5			Pass	*
9543.75	47.2	47.4	10.2	-37.7	-13.0	-24.7			Pass	*
11452.50			15.1		-13.0					NF
13361.25			20.4		-13.0					NF
15270.00			21.3		-13.0					NF
17178.75			31.0		-13.0					NF
19087.50			38.0		-13.0					NF
20996.25			39.1		-13.0					NF

* = Signal Measured NF = Noise Floor, no signal observed, even at lower RBW.

2.2. Substitution Method Test Data

Substitution Method For Radiated Emissions

Complete	Yes			Job # : 25-713-KYO	Test # : 1
Preliminary				Page 1	of 1
Client Name :	KYOCERA WIRELESS Corp.				
EUT Name :	Cellular Phone				
EUT Model # :	KX160B				
EUT Part # :					
EUT Serial # :	A1DX----1CSC0X				
EUT Config. :	Transmit				
Specification :	FCC Part 22 & Part 24			Reference :	
		Temp. (deg. C) :		Date :	09/01/05
Dipole Ant.#:	760	Humidity (%) :		Time :	
Log Ant.#:	110	EUT Voltage :	NA	Staff :	Mike Krumweide
DRG Ant. # RX	752	EUT Freq :	NA	Photo ID:	
DRG Ant. # TX	529	Phase:	NA	Peak Bandwidth:	RBW-1MHz
Cable#: TX	40ft	Location:	SOATS		VBW-1MHz
Cable#: RX	60ft	Distance:	3m		
Spec An.#:	835				
QP #:	NA				
PreSelect#:	NA				

PCS Harmonics

target Frequency mHz	level dBuV/m	Horn Gain dBi	cable loss dB	Signal Generator dBm	Total (EIRP) dBm	Spec dBm	Margin dBm	
3702.50	33.3	9.87	7.5	-31.00	-28.63	-13	-15.6	1 MHz
3760.00	28.2	9.88	7.6	-37.00	-34.72	-13	-21.7	1 MHz

RADIATED EMISSIONS AND SUBSTITUTION METHOD

TEST EQUIPMENT

Client	Kyocera-Wireless	EUT Name	TRI-MODE CELLULAR MOBILE PHONE
PAN #	25-713-KYO	EUT Model	KX160B

Device Type	*Model #*	*Asset #*	*Used*	*Cal Done*	*Cal Due*
Pre-Amplifier					
High-Frequency	Nemko	842	X	5/19/05	5/19/06
Antenna					
Antenna, Ridged Guide	3115	752	X	12/29/04	12/29/05
Antenna, Ridged Guide	3115	529	X	4/13/05	4/13/06
Spectrum Analyzer / Receiver					
Spectrum Analyzer, R&S	RHDFSEK	835	X	12/30/04	12/30/05
Signal Generator, Gigatronics	1018	440	X	9/22/04	9/22/05

Photograph 3. FCC, Part 22/24 Radiated Emissions Test Configuration

EUT IN "VERTICAL" POSITION

Photograph 4. FCC, Part 22/24 Radiated Emissions Test Configuration

EUT IN "ON-SIDE" POSITION

Photograph 5. FCC, Part 22/24 Radiated Emissions Test Configuration

EUT IN "FACE-UP" POSITION

APPENDIX A

A. Radiated Emissions Measurement Uncertainties

1. Introduction

ISO/IEC 17025:1999 and ANSI/NCSL Z540-1-1994 require that all measurements contained in a test report be "traceable". "Traceability" is defined in the *International Vocabulary of Basic and General Terms in Metrology* (ISO: 1993) as: "the property of the result of a measurement... whereby it can be related to stated references, usually national or international standards, through an unbroken chain of comparisons, *all having stated uncertainties*".

The purposes of this Appendix are to "state the *Measurement Uncertainties*" of the conducted emissions and radiated emissions measurements contained in Section 5 of this Test Report, and to provide a practical explanation of the meaning of these measurement uncertainties.

2. Statement of the Worst-Case Measurement Uncertainties for the Conducted and Radiated Emissions Measurements Contained in This Test Report

Table 1: Worst-Case Expanded Uncertainty "U" of Measurement for a k=2 Coverage Factor

Radiated Emissions Measurement Detection Systems	Applicable Frequency Range	"U" for a k=2 Coverage Factor
HP8568B Spectrum Analyzer with QPA & HP8447F Preamplifier	30 MHz - 200 MHz	+4.0 dB, -4.1 dB
HP8568B Spectrum Analyzer with QPA & HP8447F Preamplifier	200 MHz-1000 MHz	+/- 3.5 dB
HP8566B Spectrum Analyzer with QPA & Preselector	30 MHz - 200 MHz	+3.9 dB, -4.0 dB
HP8566B Spectrum Analyzer with QPA & Preselector	200 MHz-1000 MHz	+/- 3.4 dB
HP8566B Spectrum Analyzer with QPA & HP 8449A Preamplifier	1 GHz - 18 GHz	+2.5 dB, -2.6 dB
HP8566B Spectrum Analyzer with QPA & HP8449A Preamplifier	18 GHz - 40 GHz	+/- 3.4 dB

NOTES:

1. Applies to 3 and 10 meter measurement distances
2. Applies to all valid combinations of Transducers (i.e. LISNs, Line Voltage Probes, and Antennas, as appropriate)
3. Excludes the Repeatability of the EUT

3. Practical Explanation of the Meaning of Radiated Emissions Measurement Uncertainties

In general, a "Statement of Measurement Uncertainty" means that with a certain (specified) confidence level, the "true" value of a measurand will be between a (stated) upper bound and a (stated) lower bound.

In the specific case of EMC Measurements in this test report, the measurement uncertainties of the conducted emissions measurements and the radiated emissions measurements have been calculated in accordance with the method detailed in the following documents:

- *ANSI Z540.2 (2002) Guide to the Expression of Uncertainty in Measurement*
- NIS 81:1994, *The Treatment of Uncertainty in EMC Measurements* (NAMAS, 1994)
- NIST Technical Note 1297(1994), *Guidelines for Evaluating and Expressing the Uncertainty of NIST Measurement Results* (NIST, 1994)

The calculation method used in these documents requires that the stated uncertainty of the measurements be expressed as *an "expanded uncertainty", U, with a k=2 coverage factor*. The practical interpretation of this method of expressing measurement uncertainty is shown in the following example:

EXAMPLE: Assume that at 39.51 MHz, the (measured) radiated emissions level was equal to +26.5 dBuV/m, and that the +/- 2 standard deviations (i.e. 95% confidence level) measurement uncertainty was +/- 3.4 dB.

In the example above, the phrase "k = 2 Coverage Factor" simply means that the measurement uncertainty is stated to cover +/-2 standard deviations (i.e. a 95% confidence interval) about the measurand. The measurand is the radiated emissions measurement of +26.5 dBuV/m at 39.51 MHz, and the 95% bounds for the uncertainty are –3.4 dB to + 3.4 dB. One can thus be 95% confident that the "true" value of the radiated emissions measurement is between +23.1 dBuV/m and +29.5 dBuV/m. *In effect, this means that in the above example there is only a 2.5% chance that the "true" radiated emissions value exceeds +29.5 dBuV/m.*

APPENDIX B

B. Nemko USA, Inc.'s Test Equipment & Facilities Calibration Program

Nemko USA, Inc. operates a comprehensive Periodic Calibration Program in order to ensure the validity of all test data. Nemko USA's Periodic Calibration Program is fully compliant to the requirements of NVLAP Policy Guide PG-1-1988, ANSI/NCSL Z540-1-1994, ISO 10012:2003 , ISO/IEC 17025:1999, and ISO-9000:2000. Nemko USA, Inc.'s calibrations program therefore meets or exceed the US national commercial and military requirements [N.B. ANSI/NCSL Z540-1-1994 replaces MIL-STD-45662A].

Specifically, all of Nemko USA's *primary reference standard devices* (e.g. vector voltmeters, multimeters, attenuators and terminations, RF power meters and their detector heads, oscilloscope mainframes and plug-ins, spectrum analyzers, RF preselectors, quasi-peak adapters, interference analyzers, impulse generators, signal generators and pulse/function generators, field-strength meters and their detector heads, etc.) and certain *secondary standard devices* (e.g. RF Preamplifiers used in CISPR 11/22 and FCC Part 15/18 tests) are periodically recalibrated by:

- A Nemko USA-approved independent (third party) metrology laboratory that uses NIST-traceable standards and that is ISO Guide 25-accredited as a calibration laboratories by NIST; or,
- A Nemko USA-approved independent (third party) metrology laboratory that uses NIST-traceable standards and that is ISO Guide 25-accredited as a calibration laboratory by another accreditation body (such as A2LA) that is mutually recognized by NIST; or,
- A manufacturer of Measurement and Test Equipment (M&TE), if the manufacturer uses NIST-traceable standards and is ISO Guide 25-accredited as calibration laboratory either by NIST or by another accreditation body (such as A2LA) that is mutually recognized by NIST; or
- A manufacturer of M&TE (or by a Nemko USA-approved independent third party metrology laboratory) that is not ISO Guide 25-accredited. (In these cases, Nemko USA conducts an annual audit of the manufacturer or metrology laboratory for the purposes of proving traceabilty to NIST, ensuring that adequate and repeatable calibration procedures are being applied, and verifying conformity with the other requirements of ISO Guide 25).

In all cases, the entity performing the Calibration is required to furnish Nemko USA with a calibration test report and/or certificate of calibration, and a "calibration sticker" on each item of M&TE that is successfully calibrated.

Calibration intervals are normally one year, except when the manufacture advises a shorter interval (e.g. the HP 8568B Spectrum Analyzer is recalibrated every six months) or if US Government directives or client requirements demand a shorter interval. Items of instrumentation/related equipment which fail during routine use, or which suffer visible mechanical damage (during use or while in transit), are sidelined pending repair and recalibration. (Repairs are carried out either in-house [if minor] or by a Nemko USA-approved independent [third party] metrology laboratory, or by the manufacturer of the item of M&TE).

Each antenna used for CISPR 11 and CISPR 22 and FCC Part 15 and Part 18 radiated emissions testing (and for testing to the equivalent European Norms) is calibrated annually by either a NIST (or A2LA) ISO Standard 17025-Accredited third-party Antenna Calibration Laboratory or by the antenna's OEM if the OEM is NIST or A2LA ISO Standard 17025-accredited as an antenna calibration laboratory. The antenna calibrations are performed using the methods specified in Annex G.5 of CISPR 16-1(2003) or ANSI C63.5-2004, including the "Three-Antenna Method". Certain other kinds of antennas (e.g. magnetic-shielded loop antennas) are calibrated annually by either a NIST (or A2LA) ISO Standard 17025-accredited third-party antenna calibration laboratory, or by the antenna's OEM if the OEM is NIST or A2LA ISO Standard 17025-accredited as an antenna calibration laboratory using the procedures specified in the latest version of SAE ARP-958.

In accordance with FCC and other regulations, Nemko USA recalibrates its suite of antennas used for radiated emissions tests on an annual basis. These calibrations are performed as a precursor to the FCC-required annual revalidation of the Normalized Site Attenuation properties of Nemko USA's Open Area Test Site. Nemko USA, Inc. uses the procedures given in both Subclause 16.6 and Annex G.2 of CISPR 16-1 (2003), and, ANSI C63.4-2003 when performing the normalized site attenuation measurements.

United States Department of Commerce
National Institute of Standards and Technology

NVLAP®

DEPARTMENT OF COMMERCE ★ UNITED STATES OF AMERICA ★

Certificate of Accreditation

ISO/IEC 17025:1999
ISO 9002:1994

NEMKO USA, INC. - SAN DIEGO EMC DIVISION
SAN DIEGO, CA

is recognized by the National Voluntary Laboratory Accreditation Program for satisfactory compliance with criteria set forth in NIST Handbook 150:2001, all requirements of ISO/IEC 17025:1999, and relevant requirements of ISO 9002:1994. Accreditation is awarded for specific services, listed on the Scope of Accreditation, for:

ELECTROMAGNETIC COMPATIBILITY AND TELECOMMUNICATIONS

December 31, 2005
Effective through

For the National Institute of Standards and Technology
NVLAP Lab Code: 200116-0

NVLAP-01C (06-01)

NVLAP® National Voluntary Laboratory Accreditation Program

SCOPE OF ACCREDITATION TO ISO/IEC 17025:1999

Nemko USA, Inc. - San Diego EMC Division
11696 Sorrento Valley Road, Suite F
San Diego, CA 92121
Mr. Ricky Hill
Phone: 858-755-5525 x207 Fax: 858-793-9914
E-Mail: rick.hill@nemko.com
URL: http://www.nemko.com

Revised Scope 06/22/2005

ELECTROMAGNETIC COMPATIBILITY AND TELECOMMUNICATIONS **NVLAP LAB CODE 200116-0**

NVLAP Code	*Designation / Description*
Emissions Test Methods:	
12/CIS14	CISPR 14-1 (March 30, 2000): Limits and Methods of Measurement of Radio interference Characteristics of Household Electrical Appliances, Portable Tools and Similiar Electrical Apparatus - Part 1: Emissions
12/CIS14a	EN 55014-1 (1993), A1 (1997), A2 (1999):
12/CIS14b	AS/NZS 1044 (1995):
12/CIS14c	CNS 13783-1: Electromagnetic Compatibility Requirements for household appliances, electric tools and similar apparatus - Part 1: Emissions
12/CIS15b	CNS 13439 (2000) + A1 (2001): Limits and methods of measurement of radio disturbance characteristics of electrical lighting and similar equipment
12/CIS22	IEC/CISPR 22 (1997) & EN 55022 (1998) + A1(2000): Limits and methods of measurement of radio disturbance characteristics of information technology equipment
12/CIS22a	IEC/CISPR 22 (1993) and EN 55022 (1994): Limits and methods of measurement of radio disturbance characteristics of information technology equipment, Amendment 1 (1995) and Amendment 2 (1996)
12/CIS22b	CNS 13438 (1997): Limits and Methods of Measurement of Radio Interference Characteristics of Information Technology Equipment

2005-01-01 through 2005-12-31
Effective dates

For the National Institute of Standards and Technology

National Voluntary Laboratory Accreditation Program

Revised Scope 06/22/2005

ELECTROMAGNETIC COMPATIBILITY AND TELECOMMUNICATIONS

NVLAP LAB CODE 200116-0

NVLAP Code	*Designation / Description*
12/EM02a	IEC 61000-3-2, Edition 2.1 (2001-10), EN 61000-3-2 (2000), and AS/NZS 2279.1 (2000): Electromagnetic compatibility (EMC) Part 3-2: Limits - Limits for harmonic current emissions (equipment input current <= 16 A)
12/EM03b	IEC 61000-3-3, Edition 1.1(2002-03) & EN 61000-3-3, A1(2001): EMC - Part 3-3: Limits - Limitations of voltage changes, voltage flucuations and flicker, in public low-voltage supply-systems, for equipment with rated current <=16 A per phase and not subject to conditional connections
12/F18	FCC OST/MP-5 (1986): FCC Methods of Measurement of Radio Noise Emissions for ISM Equipment (cited in FCC Method 47 CFR Part 18 - Industrial, Scientific, and Medical Equipment)
12/T51	AS/NZS CISPR 22 (2002) and AS/NZS 3548 (1997): Electromagnetic Interference - Limits and Methods of Measurement of Information Technology Equipment

Immunity Test Methods:

12/I01	IEC 61000-4-2, Ed. 1.2 (2001) + A1, A2; EN 61000-4-2: Electrostatic Discharge Immunity Test
12/I02	IEC 61000-4-3, Ed. 2.0 (2002-03); EN 61000-4-3 (2002): Radiated Radio-Frequency Electromagnetic Field Immunity Test
12/I03	IEC 61000-4-4(1995), A1(2000), A2(2001); EN 61000-4-4: Electromagnetic compatibility (EMC) - Part 4-4: Testing and measurement techniques - Electrical Fast Transient/Burst Immunity Test
12/I04	IEC 61000-4-5, Ed. 1.1 (2001-04); EN 61000-4-5: Electromagnetic compatibility (EMC) - Part 4-5: Testing and measurement techniques - Surge immunity test
12/I05	IEC 61000-4-6, Ed. 2.0 (2003-05); EN 61000-4-6: Electromagnetic compatibility (EMC) - Part 4-6: Testing and measurement techniques - Immunity to conducted disturbances, induced by radio-frequency fields
12/I06	IEC 61000-4-8, Ed. 1.1 (2001); EN 61000-4-8: Electromagnetic compatibility (EMC) - Part 4-8: Testing and measurement techniques - Power frequency magnetic field immunity test

2005-01-01 through 2005-12-31

Effective dates

For the National Institute of Standards and Technology

NVLAP-01S (REV. 2005-05-19)

National Voluntary Laboratory Accreditation Program

Revised Scope 06/22/2005

ELECTROMAGNETIC COMPATIBILITY AND TELECOMMUNICATIONS

NVLAP LAB CODE 200116-0

NVLAP Code	*Designation / Description*
12/I07	IEC 61000-4-11, Ed. 1.1 (2001-03); EN 61000-4-11: Voltage Dips, Short Interruptions and Voltage Variations Immunity Tests

MIL-STD-462 : Conducted Emissions:

12/A13	MIL-STD-462 Version D Method CE101
12/A14	MIL-STD-462 Version D Method CE102
12/A15	MIL-STD-462 Version D Method CE106
12/A16	MIL-STD-461 Version E Method CE101
12/A17	MIL-STD-461 Version E Method CE102
12/A18	MIL-STD-461 Version E Method CE106

MIL-STD-462 : Conducted Susceptibility:

12/B12	MIL-STD-462 Version D Method CS101
12/B13	MIL-STD-462 Version D Method CS103
12/B14	MIL-STD-462 Version D Method CS104
12/B15	MIL-STD-462 Version D Method CS105
12/B16	MIL-STD-462 Version D Method CS109
12/B17	MIL-STD-462 Version D Method CS114
12/B18	MIL-STD-462 Version D Method CS115
12/B19	MIL-STD-462 Version D Method CS116
12/B20	MIL-STD-461 Version E Method CS101
12/B21	MIL-STD-461 Version E Method CS103
12/B22	MIL-STD-461 Version E Method CS104

2005-01-01 through 2005-12-31

Effective dates

For the National Institute of Standards and Technology

NVLAP-01S (REV. 2005-05-19)

NVLAP® National Voluntary Laboratory Accreditation Program

Revised Scope 06/22/2005

ELECTROMAGNETIC COMPATIBILITY AND TELECOMMUNICATIONS

NVLAP LAB CODE 200116-0

NVLAP Code	*Designation / Description*
12/B23	MIL-STD-461 Version E Method CS105
12/B24	MIL-STD-461 Version E Method CS109
12/B25	MIL-STD-461 Version E Method CS114
12/B26	MIL-STD-461 Version E Method CS115
12/B27	MIL-STD-461 Version E Method CS116

MIL-STD-462 : Radiated Emissions:

12/D04	MIL-STD-462 Version D Method RE101
12/D05	MIL-STD-462 Version D Method RE102
12/D06	MIL-STD-462 Version D Method RE103
12/D07	MIL-STD-461 Version E Method RE101
12/D08	MIL-STD-461 Version E Method RE102
12/D09	MIL-STD-461 Version E Method RE103

MIL-STD-462 : Radiated Susceptibility:

12/E08	MIL-STD-462 Version D Method RS101
12/E09	MIL-STD-462 Version D Method RS103
12/E10	MIL-STD-462 Version D Method RS105
12/E11	MIL-STD-461 Version E Method RS101
12/E12	MIL-STD-461 Version E Method RS103
12/E13	MIL-STD-461 Version E Method RS105

2005-01-01 through 2005-12-31

Effective dates

For the National Institute of Standards and Technology

NVLAP-01S (REV. 2005-05-19)