XRocker

2.1 Wireless

with vibration

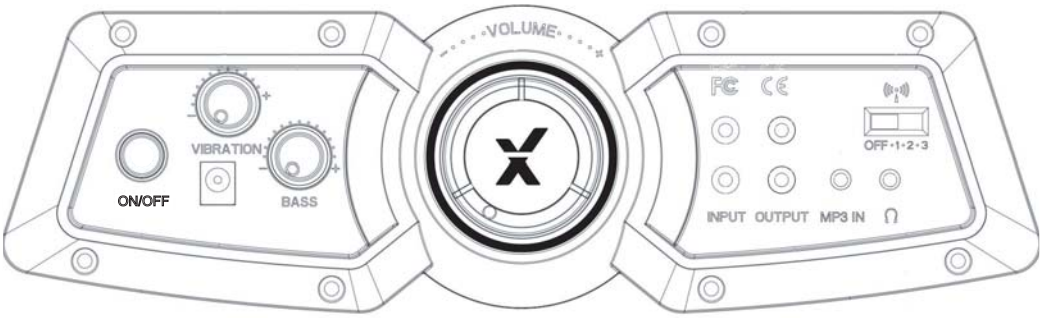

Need Help? Email: service@acecasual.com
Phone: 866-969-2603 www.xrockernation.com
IMPORTANT: You must keep your original retail receipt as proof of purchase.

Welcome to X Rocker!

Thank you for purchasing this X Rocker gaming chair. You are now close to enhancing your favorite games with **audio!**

To get started, please assemble the chair using the assembly instructions on the separate leaflet and then follow the instructions in this manual to **get rocking!**

Table of contents

3 Box contents and control panel overview
4 Wireless Connection guide: TV (All consoles)
5 Wired Connection guide: TV (All consoles)
6 Connect by controller (PS4 systems only)
7 Troubleshooting tips
8 Health and safety information

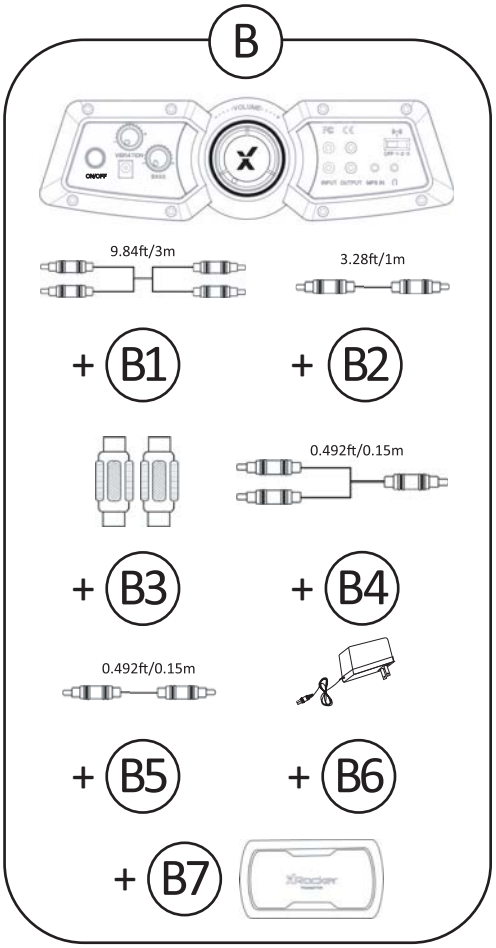

B1 - 3m RCA to RCA Audio cable

B2 - 1m 3.5mm to 3.5mm Audio cable

B3 - RCA female to female adapters

B4 - 15cm RCA to 3.5mm audio cable

B5 – 15cm 3.5mm to 3.5mm audio cable

B6 – Power Supply Cable

B7 – Wireless Transmitter

Control panel overview

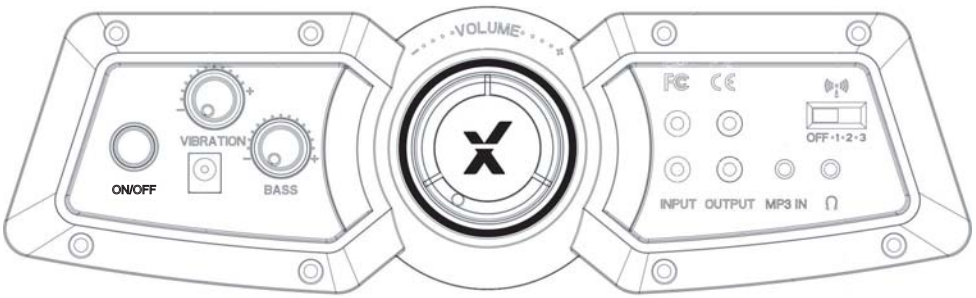

Wireless connection guide: TV (All consoles)

To connect using the wireless transmitter, connect the Wireless transmitter (**B7**) to your TV set using the 3.5mm to 3.5mm cable (**B2/B5**)

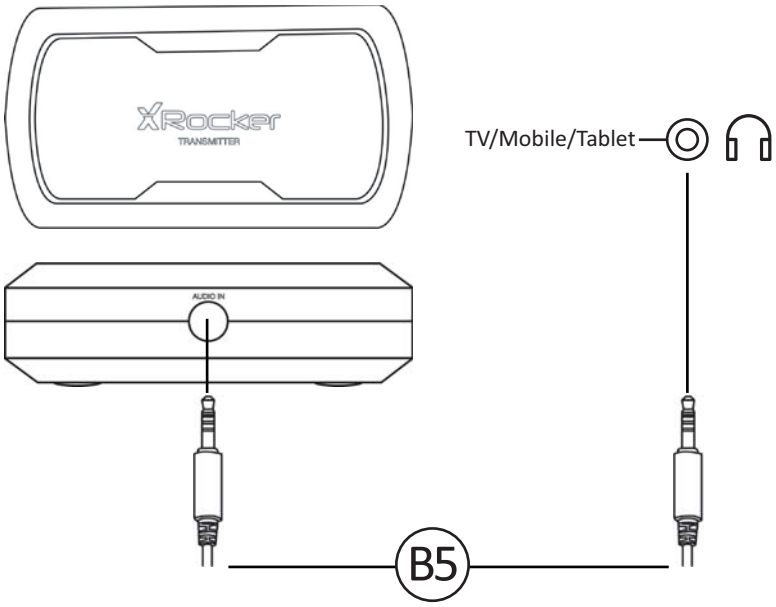

Once connected, Set the control panel on the chair and the Wireless transmitter to the same band (**1,2,3**)

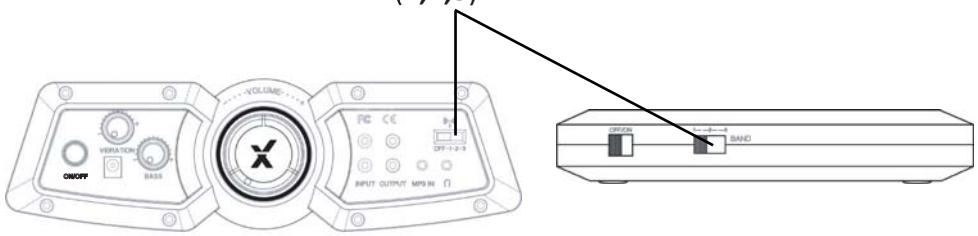

To get the best sound, make sure that the volume on the TV is set to approximately **50%** of the maximum. Depending on the TV you may need to set the volume level separately in the TV sound settings menu. (Please refer to TV manual for guidelines.)

Wired connection guide: TV (All consoles)

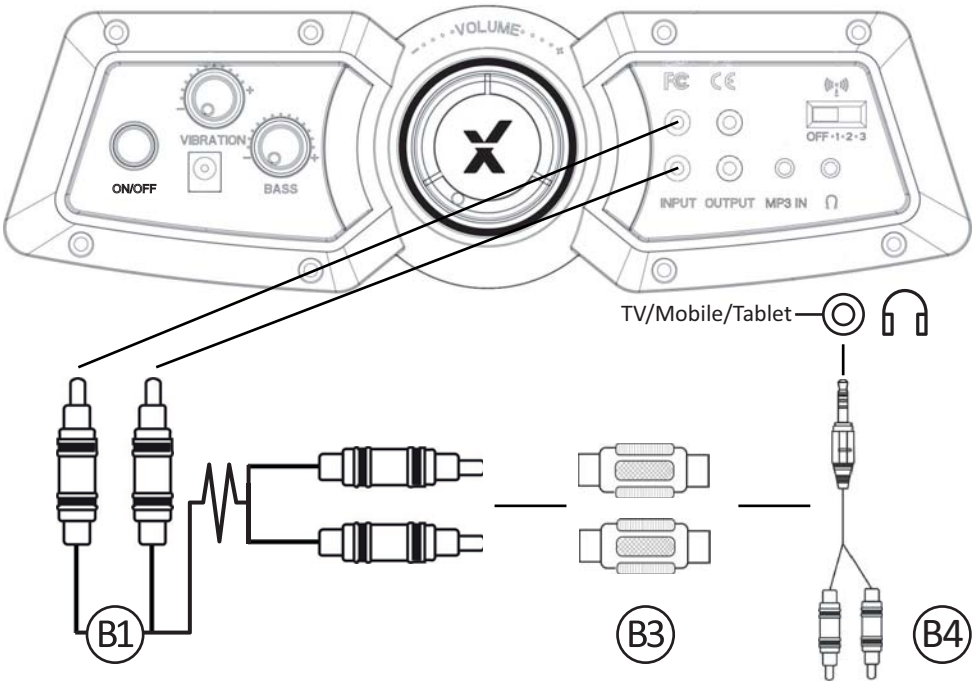

1. Connect **B1** Cable to X Rocker control panel RCA INPUT sockets
2. Connect **B3** RCA adapters to other end of **B1** RCA cable
3. Connect **B4** RCA cable to **B3** Adapter.
4. Connect **B4** 3.5mm end into the headphone socket of your Television
5. Once connected to your TV, increase volume to 50% of the maximum for the best sound level.**

***NOTE:** If your TV does not feature a headphone socket then you may need to purchase an additional TOSlink adapter to get connected directly to a console for audio. Contact support for more details.
**Depending on your TV you may need to Increase the headphone volume separately in the TV sound settings.

Connect by controller:
(PS4 systems only)

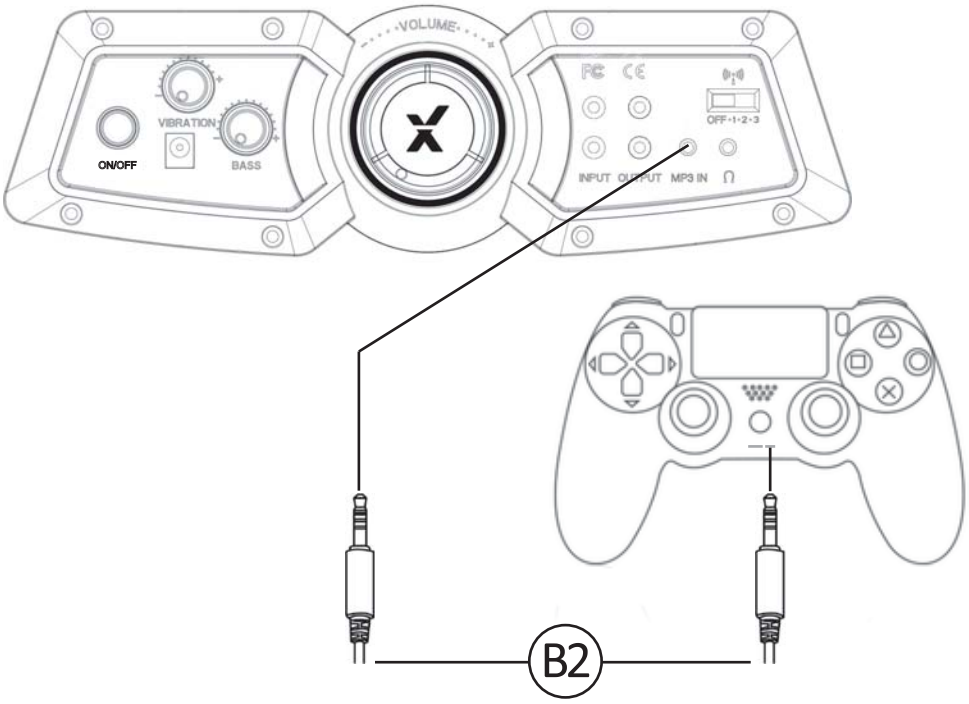

1. Connect the **B2** cable to the bottom of the PS4 controller via the headset socket.
2. Connect the other end of the **B2** cable to the chair via the green port.
3. With the PS4 turned on, go to the main menu (or locate the main menu screen). **Press and hold** the PS button on the PS4 controller until the quick menu appears on screen.
4. In this menu select **[Adjust sound and devices]**
5. Then select **[output to headphones]**
6. Change the setting from **[Chat Only]** to **[All audio]**
7. Make sure the volume in the previous menu is set to the maximum.
8. Set the control panel Wireless switch to the '**OFF**' position.

Troubleshooting tips

Issue	Troubleshooting steps
No power going to control panel	• Make sure that the power cable is connected correctly. • Make sure that the power supply at the power source is working correctly. • With the chair turned to the ON position, give the power cable a slight wiggle in the port. If any lights flicker (or not) then please contact support (details below).
No sound	• Review the connection methods on the previous page and try alternative connection methods if possible. • Confirm that the device/system is correctly configured as per previous connection guide. • Make sure that the wireless channel switcher is in the corresponding position that suits your connection method. (1,2,3 for wireless and AUX for wired connections).
Wireless transmitter cuts out during gameplay/No vibration or subwoofer sound via analogue connection	• Please make sure that the volume of the source device is at a higher level to strengthen the audio signal.
The cables connected to my X Rocker have been broken accidentally	• Please contact X Rocker support (service@acecasual.com) regarding this issue.
Interference over wireless connection	• In this case, try another of the three wireless bands to isolate the signal.

Health and safety information

• Avoid immersing or allowing the X Rocker to come into contact with liquids.
• Please consult X Rocker Support before unscrewing any of the electrical components on the chair.
• Please be mindful of any cabling laid out between the X Rocker and power source/audio device.
• Please be mindful of cabling attached when moving/swivelling the X Rocker.
• If the cables or electrical equipment are broken then this may present a choking risk, please contact Support for replacements and dispose of these parts safely.
• Do not stand on the X Rocker or exceed the 250lbs weight limit via other means.
• If your X Rocker comes with a pedestal,do not lean back on the chair to the point in which the pedestal would lift off the ground.
• If your X Rocker comes with armrests,X Rocker armrests are designed for support and comfort during gameplay, please do not use these as support for getting in/out of the chair.
• Playing audio for long periods at loud volumes may contribute to difficulties in hearing.
• Please be considerate to others when playing audio through the X Rocker speakers at higher volumes.

Caution: The user is cautioned that changes or modifications not expressly approved by the party responsible for compliance could void the user's authority to operate the equipment.

FCC NOTE: This equipment has been tested and found to comply with the limits for a Class B digital device, pursuant to Part 15 of the FCC Rules. These limits are designed to provide reasonable protection against harmful interference in a residential installation. This equipment generates, uses and can radiate radio frequency energy and, if not installed and used in accordance with the instructions, may cause harmful interference to radio communications. However, there is no guarantee that interference will not occur in a particular installation.

If this equipment does cause harmful interference to radio or television reception, which can be determined by turning the equipment off and on, the user is encouraged to try to correct the interference by one or more of the following measures:

-- Reorient or relocate the receiving antenna.

-- Increase the separation between the equipment and receiver.

-- Connect the equipment into an outlet on a circuit different from that to which the receiver is connected.

-- Consult the dealer or an experienced radio/TV technician for help.

This device complies with Part 15 of the FCC Rules. Operation is subject to the following two conditions:

(1) this device may not cause harmful interference, and

(2) this device must accept any interference received, including interference that may cause undesired operation.

FCC Radiation Exposure Statement:

This equipment complies with FCC radiation exposure limits set forth for an uncontrolled environment.

This transmitter must not be co-located or operating in conjunction with any other antenna or transmitter.

IC

This device complies with Industry Canada licence-exempt RSS standard(s). Operation is subject to the following two conditions:

(1) this device may not cause interference, and

(2) this device must accept any interference, including interference that may cause undesired operation of the device.

Le présent appareil est conforme aux CNR d'Industrie Canada applicables aux appareils radio exempts. L'exploitation est autorisée aux deux conditions suivantes :

(1) l'appareil ne doit pas causer d'interférences, et

(2) l'utilisateur de l'appareil doit accepter tout brouillage radioélectrique subi, même si le brouillage est susceptible d'en compromettre le fonctionnement.

IC Radiation Exposure Statement:

This equipment complies with Canada radiation exposure limits set forth for uncontrolled environments.

This transmitter must not be co-located or operating in conjunction with any other antenna or transmitter.

Déclaration d'IC sur l'exposition aux radiations:

Cet équipement est conforme aux limites d'exposition aux radiations définies par le Canada pour des environnements non contrôlés.

Cet émetteur ne doit pas être installé au même endroit ni utilisé avec une autre antenne ou un autre émetteur.

Need Help? Email: service@acecasual.com

Phone: 866-969-2603

www.xrockernation.com

IMPORTANT: You must keep your original retail receipt as proof of purchase.