FCC Test Report

Report No.: AGC00929150602FE01

FCC ID		OVJW308
PRODUCT DESIGNATION	:	Smart Watch
BRAND NAME	:	isport
MODEL NAME	:	W308
CLIENT	:	Million Concept Electronic (Shenzhen) Co., Ltd.
DATE OF ISSUE	:	Aug.05,2015
STANDARD(S)	:	FCC Part 15 Rules
REPORT VERSION	:	V1.0

Attestation of Global Compliance (Shenzhen) Co., Ltd

CAUTION:
This report shall not be reproduced except in full without the written permission of the test laboratory and shall not be quoted out of context.

Report Revise Record

Report Version	Revise Time	Issued Date	Valid Version	Notes
V1.0	/	Aug.05,2015	Valid	Original Report

TABLE OF CONTENTS

1. VERIFICATION OF CONFORMITY 4
2. SYSTEM DESCRIPTION 5
3. MEASUREMENT UNCERTAINTY 5
4. PRODUCT INFORMATION 6
5. SUPPORT EQUIPMENT 7
7. FCCLINE CONDUCTED EMISSION TEST 9
7.1. LIMITS OF LINE CONDUCTED EMISSION TEST 9
7.2. BLOCK DIAGRAM OF TEST SETUP 9
7.3. PROCEDURE OF LINE CONDUCTED EMISSION TEST 10
7.4. TEST RESULT OF LINE CONDUCTED EMISSION TEST 11
8. FCC RADIATED EMISSION TEST 13
8.1. LIMITS OF RADIATED EMISSION TEST 13
8.2. BLOCK DIAGRAM OF TEST SETUP 13
8.3. PROCEDURE OF RADIATED EMISSION TEST 14
8.4. TEST RESULT OF RADIATED EMISSION TEST 15
APPENDIX A: PHOTOGRAPHS OF TEST SETUP 17
APPENDIX B: PHOTOGRAPHS OF EUT 18

1. VERIFICATION OF CONFORMITY

Applicant	Million Concept Electronic (Shenzhen) Co., Ltd.
Address	No.98, Xiashanmen Road, Songgang Town, Bao'an District, Shenzhen, China
Manufacturer	Million Concept Electronic (Shenzhen) Co., Ltd.
Address	No.98, Xiashanmen Road, Songgang Town, Bao'an District, Shenzhen, China
Product Designation	Smart Watch
Brand Name	isport
Test Model	W308
Measurement Procedure	ANSI C63.4: 2009
Date of test	May.27,2015
Deviation	None
Condition of Test Sample	Normal
Report Template	AGCRT-US-IT/AC(2013-03-01)

The above equipment was tested by Compliance Certification Service(Shenzhen) Inc. for compliance with the requirements set forth in the FCC Rules and Regulations Part 15, the measurement procedure according to ANSI C63.4:2009. This said equipment in the configuration described in this report shows the maximum emission levels emanating from equipment are within the compliance requirements.

The test results of this report relate only to the tested sample identified in this report.

Tested By _____
Jerry Xiao(Xiao Wang) Aug.05,2015

Reviewed By _____
Forrest Lei(Lei Yonggang) Aug.05,2015

Approved By _____
Solger Zhang(Zhang Hongyi)
Authorized Officer
Aug.05,2015

2. SYSTEM DESCRIPTION

TEST MODE DESCRIPTION		
NO.	**TEST MODE DESCRIPTION**	**WORST**
1	Data Transmission(USB)	V
Note: 1. V means EMI worst mode 2. Only worst mode data recorded in the test report		

3. MEASUREMENT UNCERTAINTY

Conducted measurement: +/- 2.75dB

Radiated measurement: +/- 3.2dB

4. PRODUCT INFORMATION

Housing Type	Plastic and metal
Power Supply	DC 3.7V by battery

I/O Port Information (☒Applicable ☐Not Applicable)

I/O Port of EUT			
I/O Port Type	**Number**	**Cable Description**	**Tested With**
USB Port	1	1m,unshielded	1

5. SUPPORT EQUIPMENT

Device Type	Manufacturer	Model Name	Serial No.	Data Cable	Power Cable
PC	DELL	INSPIRON	--	--	--

6. TEST FACILITY

Site	Compliance Certification Service(Shenzhen) Inc.
Location	No.10-1 Mingkeda Logistics Park, No.18 Huanguan South RD. Guan lan Town,Baoan Distr
Description	The test site is constructed and calibrated to meet the FCC requirements in documents ANSI C63.4:2009.

Radiated Emission Test Site 966(2)					
Name of Equipment	**Manufacturer**	**Model Number**	**Serial Number**	**Last Calibration**	**Due Calibration**
PSA Series Spectrum Analyzer	Agilent	E4446A	US44300399	03/01/2015	03/01/2016
EMI TEST RECEIVER	ROHDE&SCHWARZ	ESCI	100783	03/09/2015	03/08/2016
Amplifier	MITEQ	AM-1604-3000	1123808	03/18/2015	03/17/2016
High Noise Amplifier	Agilent	8449B	3008A01838	03/18/2015	03/17/2016
Board-Band Horn Antenna	Schwarzbeck	BBHA 9170	9170-497	07/10/2015	07/09/2016
Bilog Antenna	SCHAFFNER	CBL6143	5082	03/01/2015	03/01/2016
Horn Antenna	SCHWARZBECK	BBHA9120	D286	03/01/2015	03/01/2016
Loop Antenna	COM-POWER	AL-130	121044	09/27/2014	09/26/2015
Turn Table	N/A	N/A	N/A	N.C.R	N.C.R
Controller	Sunol Sciences	SC104V	022310-1	N.C.R	N.C.R
Controller	CT	N/A	N/A	N.C.R	N.C.R
Temp. / Humidity Meter	Anymetre	JR913	N/A	02/28/2015	02/27/2016
Antenna Tower	SUNOL	TLT2	N/A	N.C.R	N.C.R
Test S/W	FARAD	LZ-RF / CCS-SZ-3A2			

Conducted Emission Test Site					
Name of Equipment	**Manufacturer**	**Model Number**	**Serial Number**	**Last Calibration**	**Due Calibration**
EMI TEST RECEIVER	ROHDE&SCHWARZ	ESCI	100783	03/09/2015	03/08/2016
LISN(EUT)	ROHDE&SCHWARZ	ENV216	101543-WX	03/09/2015	03/08/2016
LISN	EMCO	3825/2	8901-1459	03/09/2015	03/08/2016
Temp. / Humidity Meter	VICTOR	HTC-1	N/A	03/04/2015	03/03/2016
Test S/W	FARAD	EZ-EMC/ CCS-3A1-CE			

7. FCCLINE CONDUCTED EMISSION TEST

7.1. LIMITS OF LINE CONDUCTED EMISSION TEST

Frequency	Maximum RF Line Voltage	
	Q.P.(dBuV)	Average(dBuV)
150kHz-500kHz	66-56	56-46
500kHz-5MHz	56	46
5MHz-30MHz	60	50

Note:
1. The lower limit shall apply at the transition frequency.
2. The limit decreases linearly with the logarithm of the frequency in the range 0.15 MHz to 0.50MHz.

7.2. BLOCK DIAGRAM OF TEST SETUP

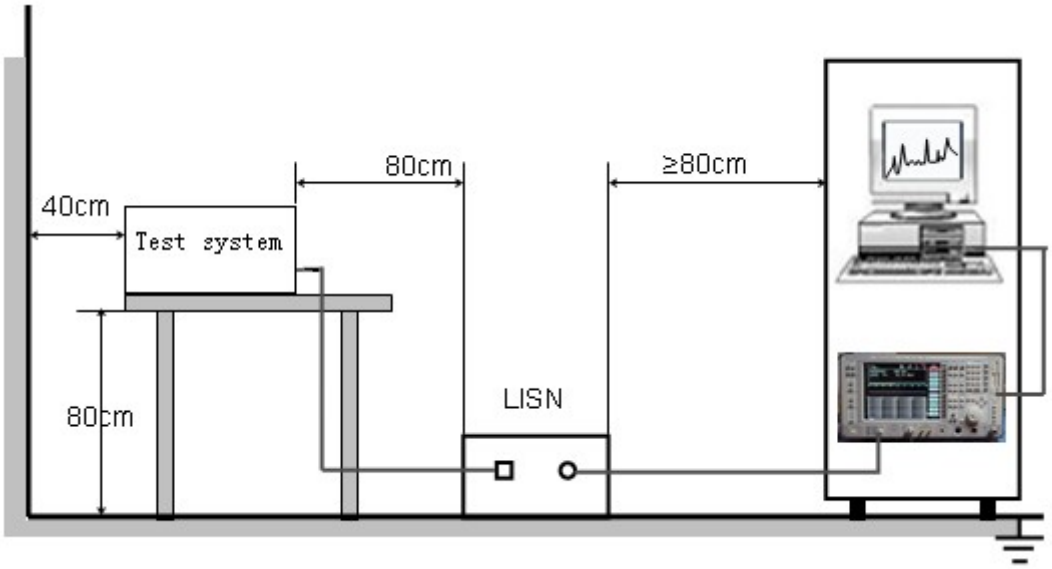

7.3. PROCEDURE OF LINE CONDUCTED EMISSION TEST

(1) The equipment was set up as per the test configuration to simulate typical actual usage per the user's manual. When the EUT is a tabletop system, a wooden table with a height of 0.8 meters is used and is placed on the ground plane as per ANSI C63.4 (see Test Facility for the dimensions of the ground plane used). When the EUT is a floor-standing equipment, it is placed on the ground plane which has a 3-12 mm non-conductive covering to insulate the EUT from the ground plane.

(2) Support equipment, if needed, was placed as per ANSI C63.4.

(3) All I/O cables were positioned to simulate typical actual usage as per ANSI C63.4.

(4) The EUT received DC5V power from PC with receive 120V/60Hz power from a LISN.

(5) The EUT test program was started. Emissions were measured on each current carrying line of the EUT using a spectrum Analyzer / Receiver connected to the LISN powering the EUT. The LISN has two monitoring points: Line 1 (Hot Side) and Line 2 (Neutral Side). Two scans were taken: one with Line 1 connected to Analyzer / Receiver and Line 2 connected to a 50 ohm load; the second scan had Line 1 connected to a 50 ohm load and Line 2 connected to the Analyzer / Receiver.

(6) Analyzer / Receiver scanned from 150 kHz to 30MHz for emissions in each of the test modes.

(7) During the above scans, the emissions were maximized by cable manipulation.

(8) A scan was taken on both power lines, Line 1 and Line 2, recording at least the six highest emissions.

(9) Emission frequency and amplitude were recorded into a computer in which correction factors were used to calculate the emission level and compare reading to the applicable limit. If EUT emission level was less –2dB to the A.V. limit in Peak mode, then the emission signal was re-checked using Q.P and Average detector.

The test data of the worst case condition (mode 1) was reported on the Summary Data page.

7.4. TEST RESULT OF LINE CONDUCTED EMISSION TEST

LINE CONDUCTED EMISSION TEST-L

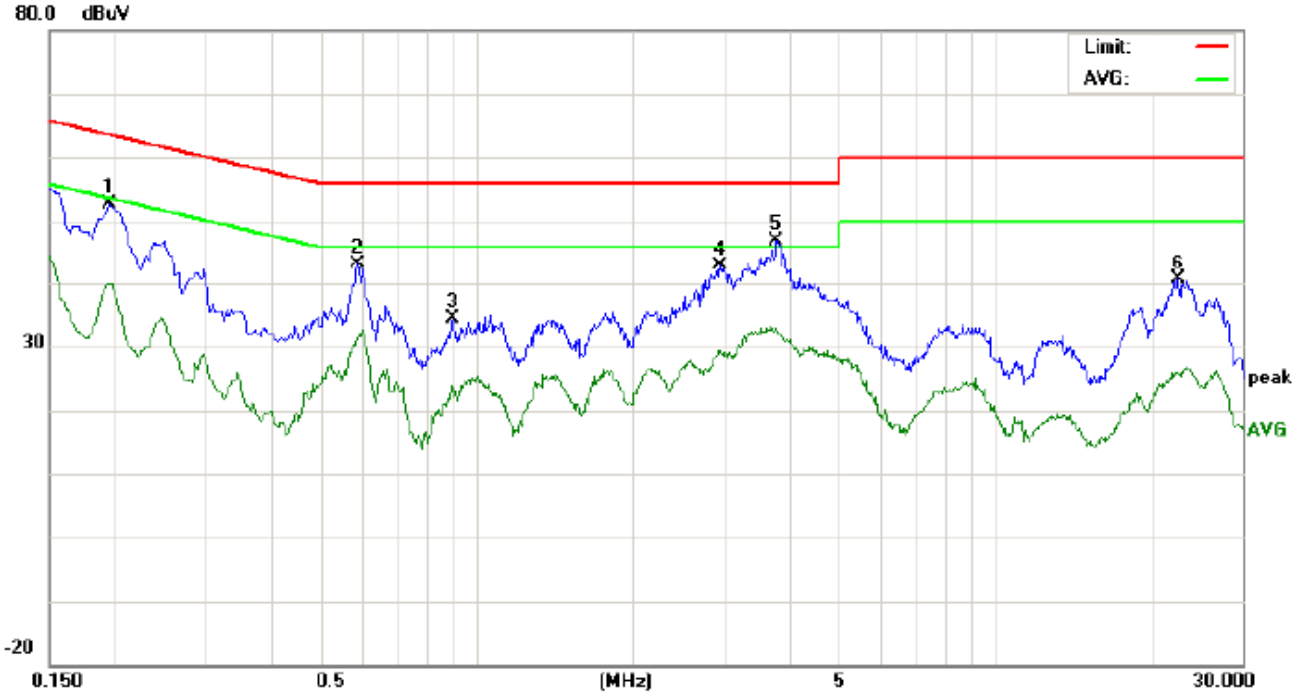

Site: Conduction
Phase: *L1*
Temperature: 23.3
Limit: FCC Class B Conduction(QP)
Power:
Humidity: 54.1 %
EUT: Smart Watch
M/N: W308
Mode: Data Transmission
Note:

No.	Freq. (MHz)	Reading_Level (dBuV)			Correct Factor	Measurement (dBuV)			Limit (dBuV)		Margin (dB)		P/F	Comment
		Peak	QP	AVG	dB	Peak	QP	AVG	QP	AVG	QP	AVG		
1	0.1955	42.47		29.67	10.21	52.68		39.88	63.80	53.80	-11.12	-13.92	P	
2	0.5899	32.90		20.80	10.32	43.22		31.12	56.00	46.00	-12.78	-14.88	P	
3	0.9020	24.07		13.12	10.41	34.48		23.53	56.00	46.00	-21.52	-22.47	P	
4	2.9539	32.27		18.92	10.54	42.81		29.46	56.00	46.00	-13.19	-16.54	P	
5	3.7900	36.50		22.31	10.46	46.96		32.77	56.00	46.00	-9.04	-13.23	P	
6	22.6140	30.55		15.77	10.11	40.66		25.88	60.00	50.00	-19.34	-24.12	P	

RESULT: PASS

LINE CONDUCTED EMISSION TEST-N

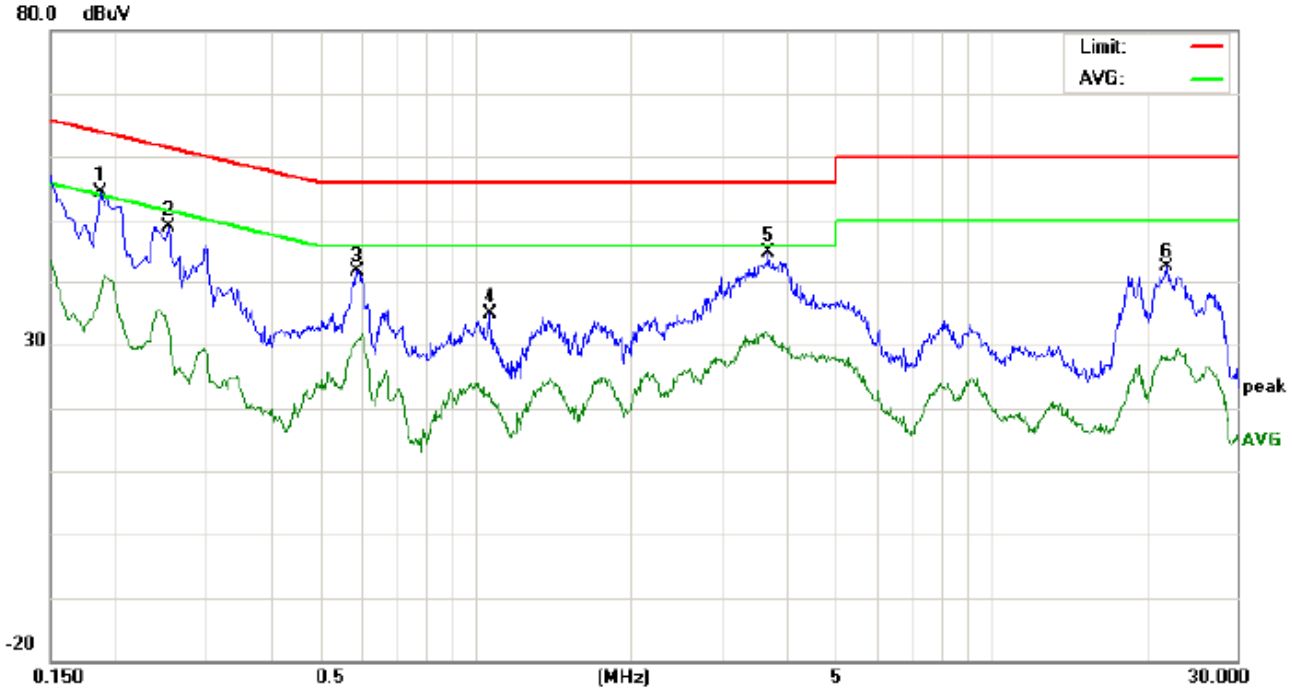

Site: Conduction | Phase: *N* | Temperature: 23.3
Limit: FCC Class B Conduction(QP) | Power: | Humidity: 54.1 %
EUT: Smart Watch
M/N: W308
Mode: Data Transmission
Note:

No.	Freq. (MHz)	Reading_Level (dBuV)			Correct Factor	Measurement (dBuV)			Limit (dBuV)		Margin (dB)		P/F	Comment
		Peak	QP	AVG	dB	Peak	QP	AVG	QP	AVG	QP	AVG		
1	0.1874	44.12		28.29	10.20	54.32		38.49	64.15	54.15	-9.83	-15.66	P	
2	0.2540	38.72		21.80	10.27	48.99		32.07	61.62	51.62	-12.63	-19.55	P	
3	0.5898	31.41		20.19	10.32	41.73		30.51	56.00	46.00	-14.27	-15.49	P	
4	1.0660	24.43		11.96	10.37	34.80		22.33	56.00	46.00	-21.20	-23.67	P	
5	3.7019	34.36		20.82	10.48	44.84		31.30	56.00	46.00	-11.16	-14.70	P	
6	21.8978	32.35		17.95	10.12	42.47		28.07	60.00	50.00	-17.53	-21.93	P	

RESULT: PASS

8. FCC RADIATED EMISSION TEST

8.1. LIMITS OF RADIATED EMISSION TEST

Frequency (MHz)	Distance (m)	Maximum Field Strength Limit (dBuV/m/ Q.P.)
30~88	3	40.0
88~216	3	43.5
216~960	3	46.0
Above 960	3	54.0

Note: The lower limit shall apply at the transition frequency.

8.2. BLOCK DIAGRAM OF TEST SETUP

System Diagram of Connections between EUT and Simulators

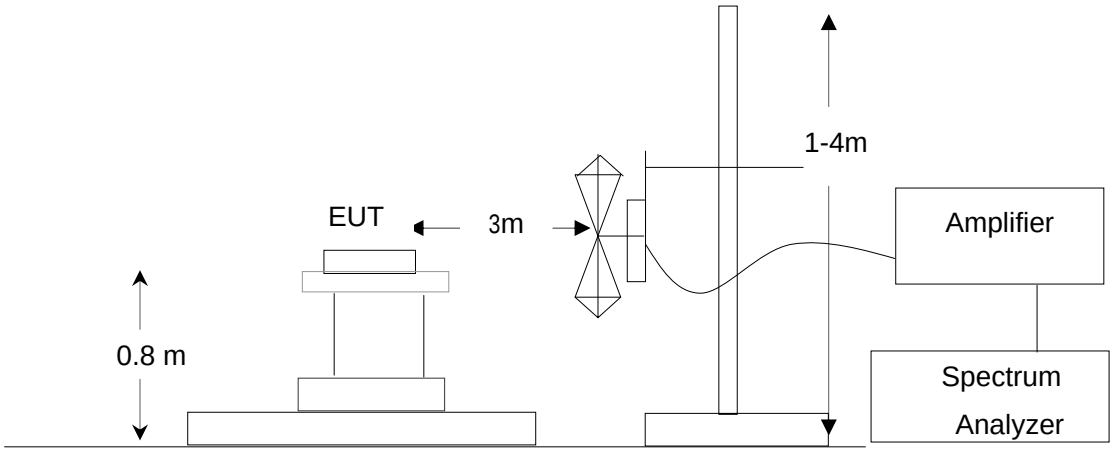

8.3. PROCEDURE OF RADIATED EMISSION TEST

(1) The equipment was set up as per the test configuration to simulate typical actual usage per the user's manual. When the EUT is a tabletop system, a wooden turntable with a height of 0.8 meters is used which is placed on the ground plane as per ANSI C63.4 (see Test Facility for the dimensions of the ground plane used). When the EUT is floor-standing equipment, it is placed on the ground plane which has a 3-12 mm non-conductive covering to insulate the EUT from the ground plane.

(2) Support equipment, if needed, was placed as per ANSI C63.4.

(3) All I/O cables were positioned to simulate typical actual usage as per ANSI C63.4.

(4) The EUT received DC 5V power from PC with receive 120V/60Hz power from socket under the turntable through a LISN.

(5) The antenna was placed at 3 meter away from the EUT as stated in FCC Part 15. The antenna connected to the Analyzer via a cable and at times a pre-amplifier would be used.

(6) The Analyzer / Receiver quickly scanned from 30MHz to 1000MHz. The EUT test program was started. Emissions were scanned and measured rotating the EUT to 360 degrees and positioning the antenna 1 to 4 meters above the ground plane, in both the vertical and the horizontal polarization, to maximize the emission reading level.

(7) The test mode(s) were scanned during the test:

(8) Recorded at least the six highest emissions. Emission frequency, amplitude, antenna position,polarization and turntable position were recorded into a computer in which correction factors were used to calculate the emission level and compare reading to the applicable limit and Q.P./Peak reading is presented.

The test data of the worst case condition (mode 1) was reported on the Summary Data page.

8.4. TEST RESULT OF RADIATED EMISSION TEST

Radiated Emission Test at 3m Distance-Horizontal

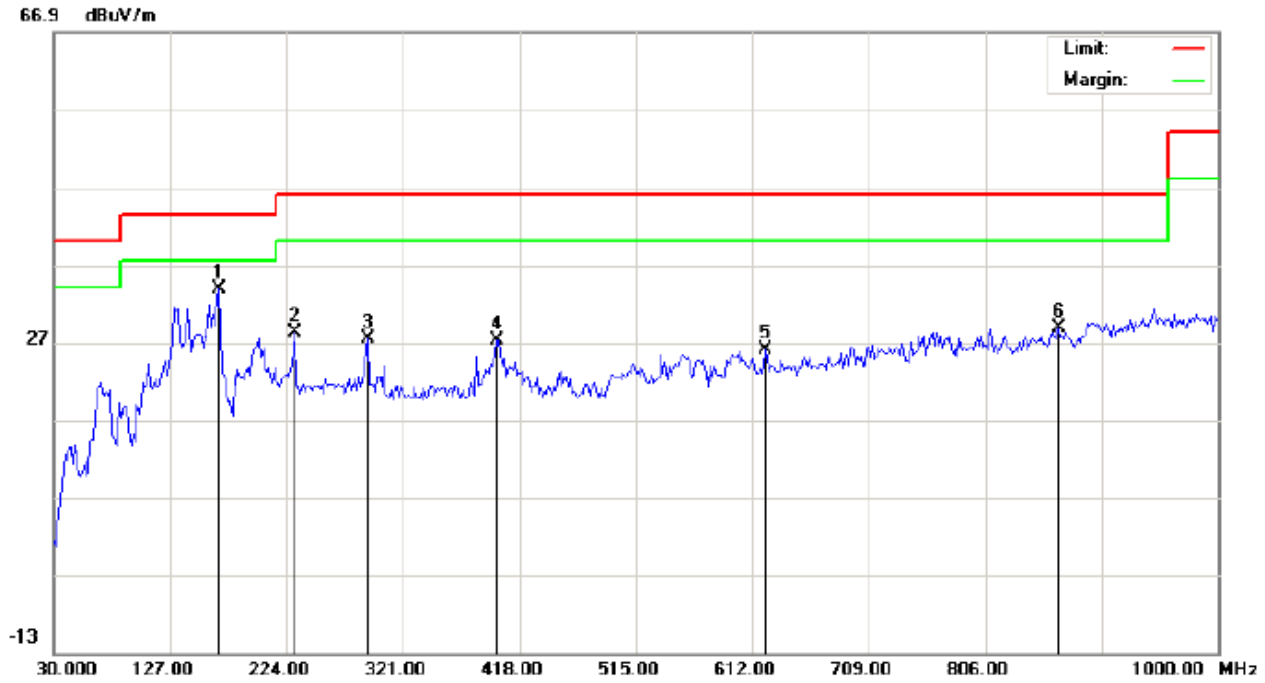

Site: site #1
Limit: FCC Class B 3M Radiation
EUT: Smart Watch
M/N: W308
Mode: Data Transmission
Note:

Polarization: *Horizontal*
Power:
Distance: 3m

Temperature: 23.9
Humidity: 57.2 %

No.	Mk	Freq.	Reading	Factor	Measurement	Limit	Over	Detector	Antenna Height	Table Degree	Comment
	-	MHz	dBuV	dB/m	dBuV/m	dBuV/m	dB		cm	degree	
1	*	167.4165	20.10	13.75	33.85	43.50	-9.65	peak			
2		230.4667	14.98	13.16	28.14	46.00	-17.86	peak			
3		291.8999	12.22	15.17	27.39	46.00	-18.61	peak			
4		398.6000	8.24	19.06	27.30	46.00	-18.70	peak			
5		623.3166	2.30	23.79	26.09	46.00	-19.91	peak			
6		867.4333	1.03	27.76	28.79	46.00	-17.21	peak			

RESULT: PASS

Radiated Emission Test at 3m Distance-Vertical

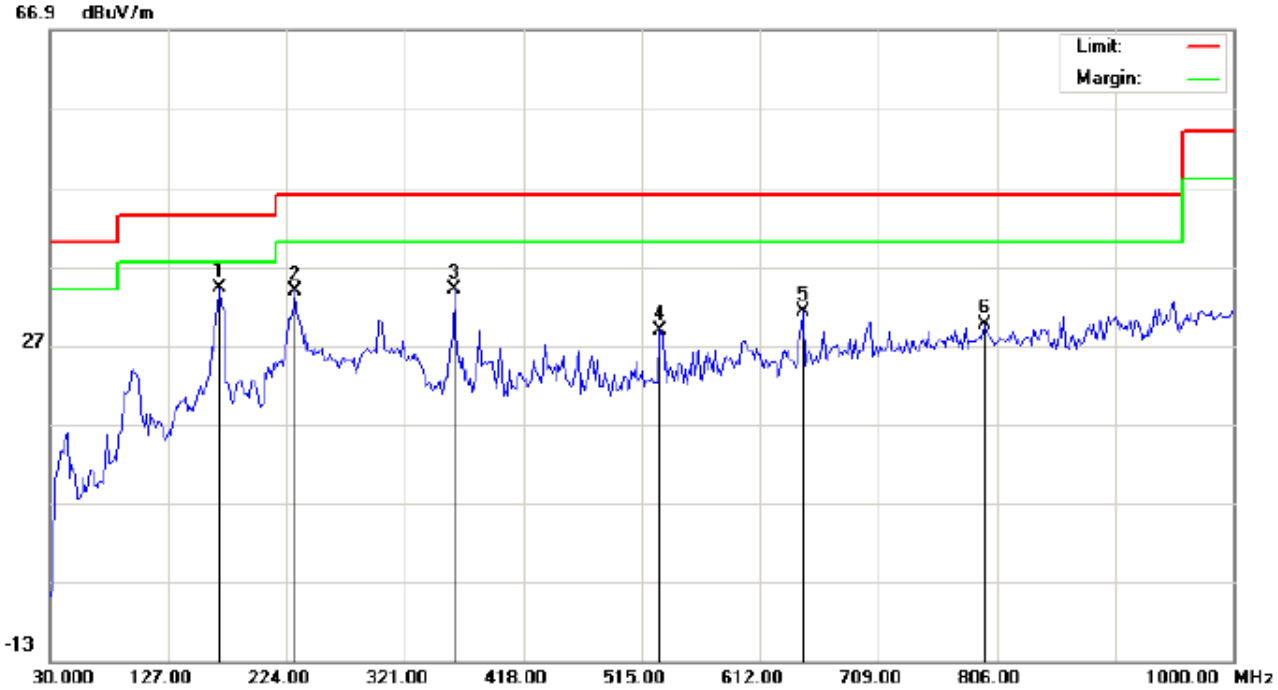

Site: site #1
Limit: FCC Class B 3M Radiation
EUT: Smart Watch
M/N: W308
Mode: Data Transmission
Note:

Polarization: *Vertical*
Power:
Distance: 3m

Temperature: 23.9
Humidity: 57.2 %

No.	Mk.	Freq.	Reading	Factor	Measurement	Limit	Over	Detector	Antenna Height	Table Degree	Comment
		MHz	dBuV	dB/m	dBuV/m	dBuV/m	dB		cm	degree	
1	*	169.0332	19.50	14.76	34.26	43.50	-9.24	peak			
2		230.4667	21.84	11.99	33.83	46.00	-12.17	peak			
3		361.4166	15.25	18.82	34.07	46.00	-11.93	peak			
4		529.5499	6.83	21.93	28.76	46.00	-17.24	peak			
5		647.5666	7.46	23.80	31.26	46.00	-14.74	peak			
6		796.2999	2.28	27.27	29.55	46.00	-16.45	peak			

RESULT: PASS

Note: Above 1GHz have more than 20dB margin, no recording in the report

Measurement = Reading + Factor, Over = Measurement – Limit.

APPENDIX A: PHOTOGRAPHS OF TEST SETUP

FCC LINE CONDUCTED EMISSION TEST SETUP

FCC RADIATED EMISSION TEST SETUP

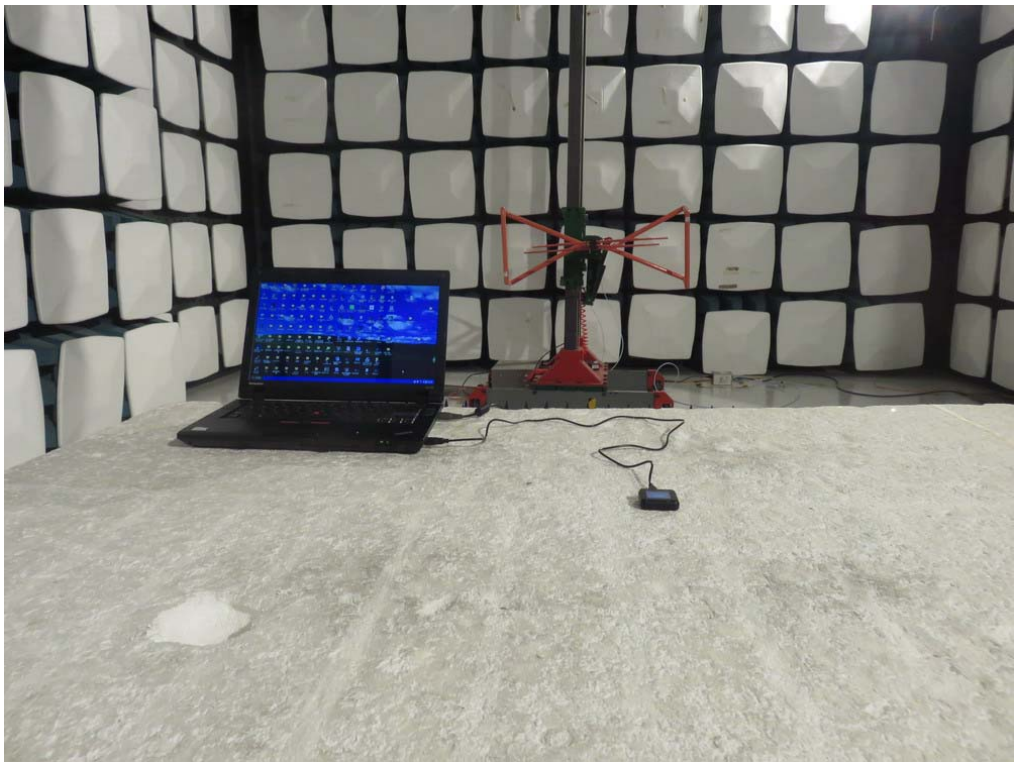

APPENDIX B: PHOTOGRAPHS OF EUT

TOTAL VIEW OF EUT

TOP VIEW OF EUT

BOTTOM VIEW OF EUT

FRONT VIEW OF EUT

BACK VIEW OF EUT

LEFT VIEW OF EUT

RIGHT VIEW OF EUT

VIEW OF EUT (PORT)

OPEN VIEW OF EUT-1

OPEN VIEW OF EUT-2

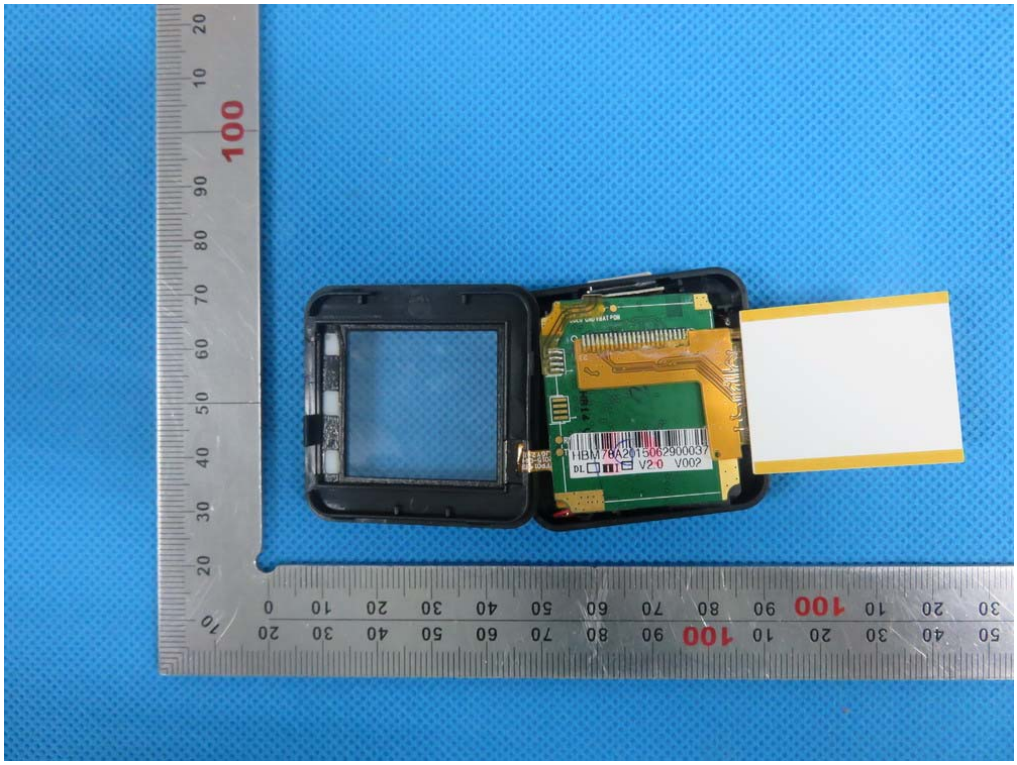

OPEN VIEW OF EUT-3

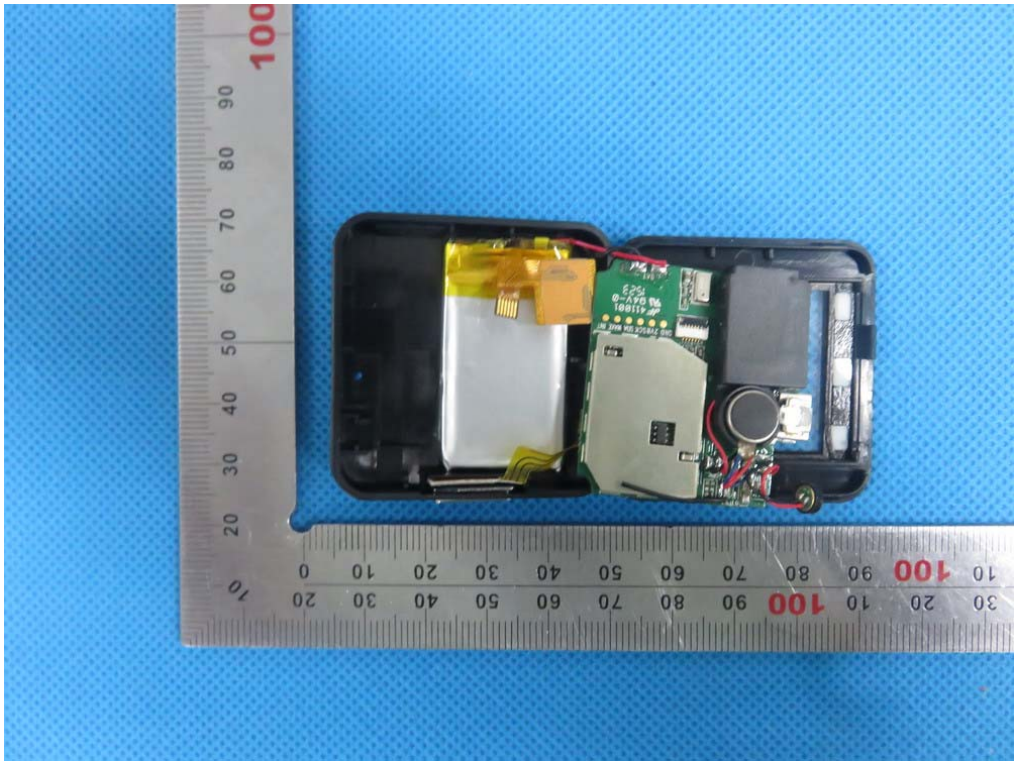

INTERNAL VIEW OF EUT-1

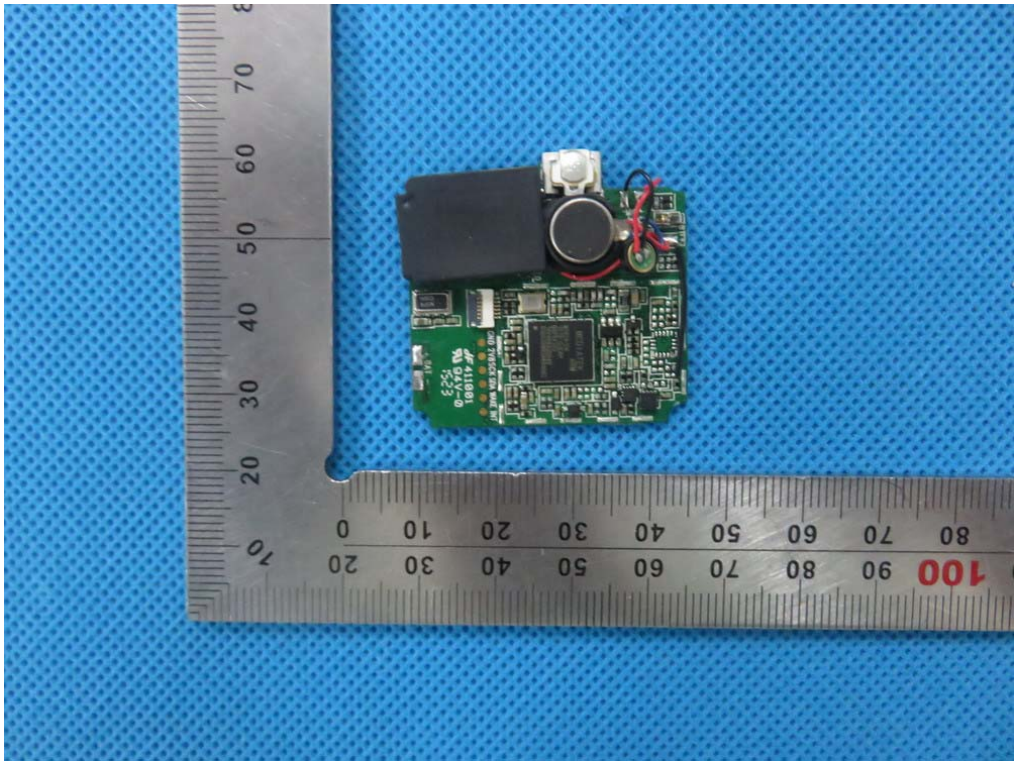

INTERNAL VIEW OF EUT-2

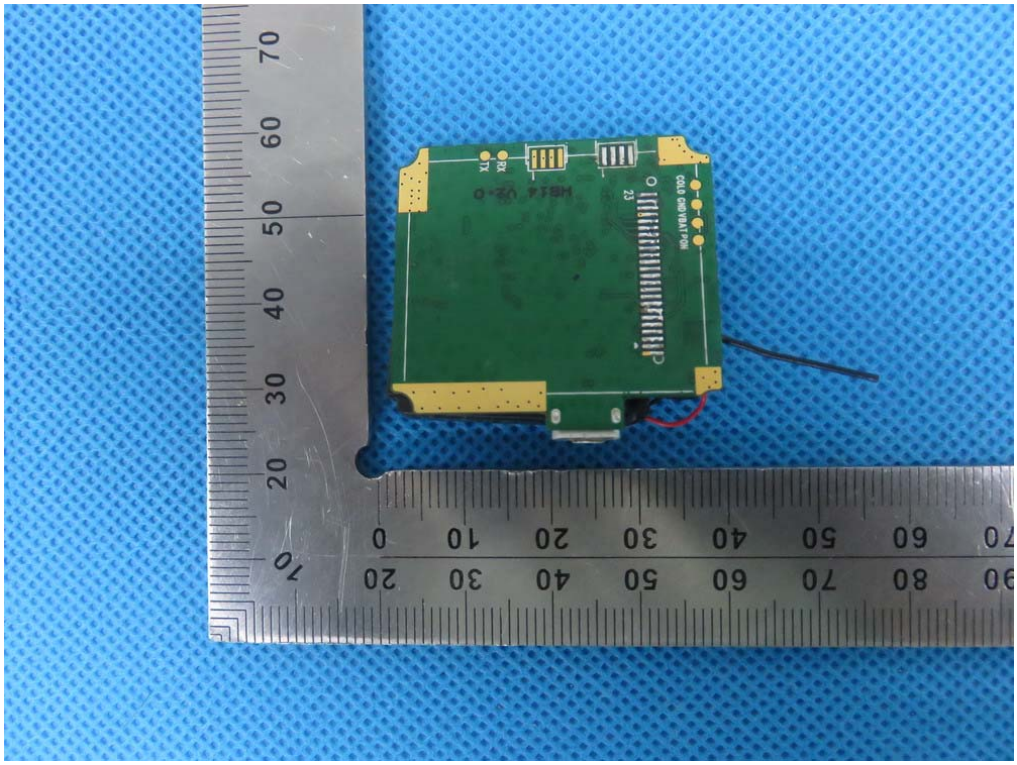

INTERNAL VIEW OF EUT-3

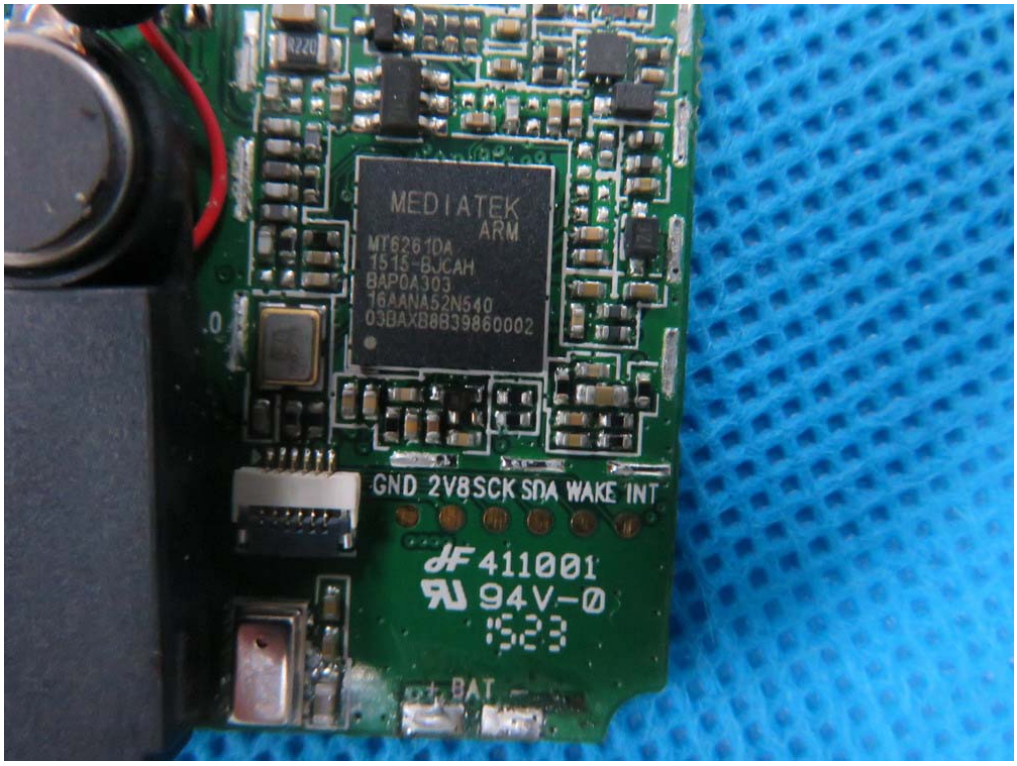

INTERNAL VIEW OF EUT-4

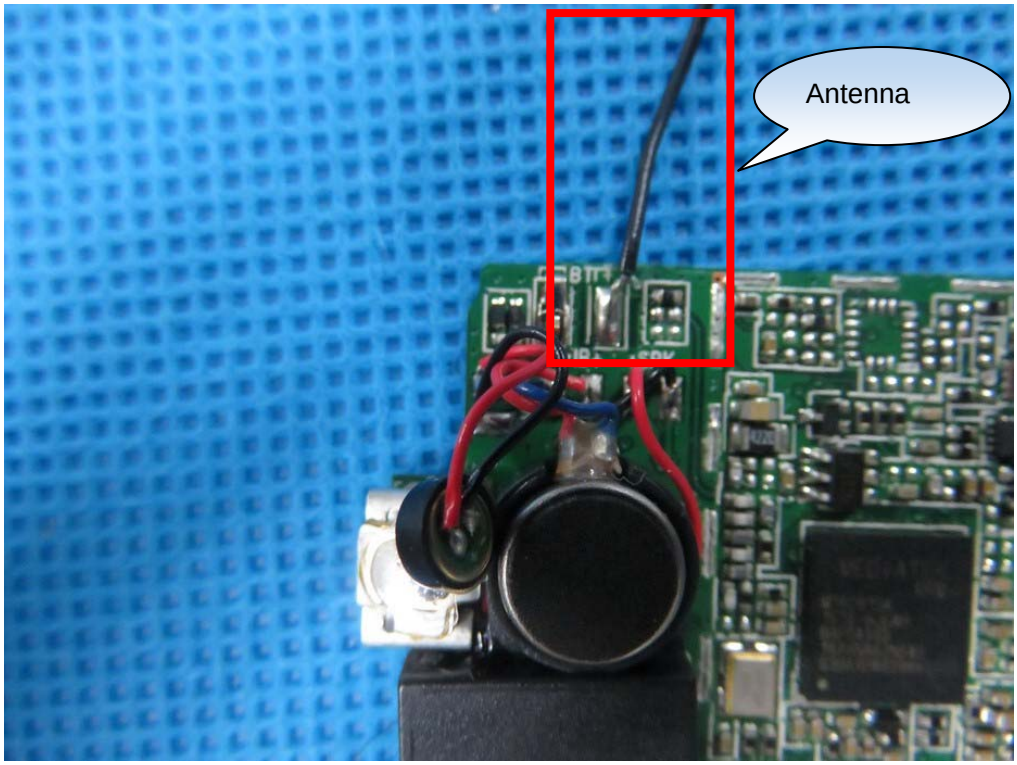

----END OF REPORT----