Operating and Installation Manual

Barrett PRC-4090 Tactical HF SDR Transceiver

Model: PRC-4090 HF SDR Transceiver

4090-00-02/3.1

© Barrett Communications

RF Exposure Warning

To ensure optimal transceiver performance and to avoid exposure to excessive electromagnetic fields, the antenna system must be installed according to the instructions provided.

High voltages exist on the antenna during transmission and tuning. Do not touch the antenna during these activities. RF burns may result.

Install the grounding system or counterpoise as directed to prevent RF burns from any metal part of the transceiver.

Safe working distance is based on continuous exposure to CW type transmissions for occupational exposure. Safe working distance can be reduced with normal voice communication.

Important Notes:

- When the PRC-4090 transceiver is used at a power level of 150 watts PEP and with a 13 dBi gain antenna, the antenna(s) used with this transceiver should be located at least 14.4 metres from the operator and should not be co-located or operating in conjunction with any other antenna or transmitter.
- When the PRC-4090 transceiver is used in a vehicular environment at a power level of 150 watts PEP with 1.5 dBi gain antenna, the antenna(s) used with this transceiver should be located at least 3.9 metres from the operator and should not be co-located or operating in conjunction with any other antenna or transmitter.
- Antenna types not included in the list below that have a gain greater than the maximum gain indicated for any type listed are strictly prohibited for use with this device.

Typical antenna types and minimum separation distance:

Antenna type	Gain (dBi)	PEP (W)	Minimum safe separation distance (m)	Typical Environment
Automatic tuned and whip	0	150	3.3	Vehicle
Magnetic Loop	1.5	150	3.9	Vehicle
Multi-wire Broadband	5	150	5.8	Fixed
Log-Periodic	13	150	14.4	Fixed
Automatic tuned and Whip	0	100	2.7	Vehicle
Magnetic Loop	1.5	100	3.2	Vehicle
Multi-wire Broadband	5	100	4.7	Fixed
Log-periodic	13	100	11.8	Fixed
Automatic tuned and Whip	0	30	1.5	Manpack
Magnetic Loop	1.5	30	1.8	Vehicle
Multi-Wire Broadband	5	30	2.6	Fixed
Log-Period	13	30	6.5	Fixed

The above antennas are identified for reference only. It is important that the installer and operator maintain a minimum safe separation distance with the actual antenna used in the installation and to insure, in a vehicular environment, that the transmitter is only used when persons outside the vehicle are at least the recommended lateral distance away.

The image below shows an example of minimum recommended separation distance from antenna in a vehicular environment.

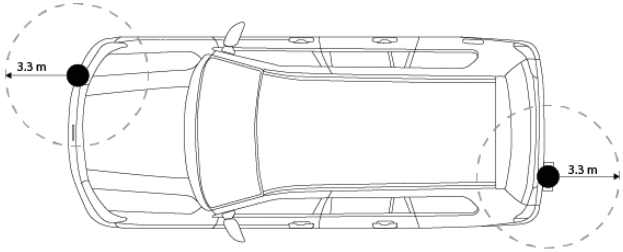

4049 Automatic Tuning Mobile HF Antenna

Note: References to Vehicular environments and minimum safe operating distances relate to persons outside the vehicle only and not to persons within the vehicle.

Contents

INTRODUCTION 1 1

Introduction 2

Important Disclosure 3

Terms & Abbreviations 4

The Barrett PRC-4090 HF Transceiver Overview 6

BASIC OPERATION 2 17

Starting the Transceiver 18

Keypad 18

Display 19

Swipe Menu 21

Status Info 23

Antenna Type 24

Selecting a Channel 25

Making a Voice Call 26

Making an Emergency Call 27

Receiving an Emergency Call 28

SELCALL 3 29

Overview 30

Important Selective Calling Information 31

Summary of Calling Systems 32

Setting up a Self ID 33

Setting up Contacts 34

Additional Contact Information 36

Making a Selcall 37

Beacon Call 38
Selcall 39
Telcall 41
Advanced Call History 43
Advanced Selcall Functions 47
Selcall Settings 47
Pagecall 48
GPS Request 49
GPS Position 51
Status Call 52
Secure Call 53
Hangup Call 55
Selcall Networks 56

BASIC SETTINGS 4 59
System Information 60
Head Device ID 60
Serial Number 60
Version Information 60
Transceiver Options 61
Configuration Pack Information 61
SDV/4026 Serial Number 61
General Settings 62
Audio Settings 63
Display Settings 64

PROGRAMMING 5 65
Channel Programming 66

Programming Channels Through the Handset 66
Free Scroll Rx/Tx.....70
Programming Via USB 73

ADVANCED OPERATION 6 75
ARINC Call 76
Audio - Advanced.....77
Rx Configuration 77
Tx Configuration 77
Audio Bandwidth 77
Line Audio..... 78
Line Follows Digital Voice..... 78
Line Out Level 78
Line In Level 78
Audio Record 78
Custom Filter Bandwidth 78
Collective Call 79
Digital Voice (Encoding) 80
Export 81
Frequency Hopping 82
Selecting the Hopping Band..... 82
Entering the Hopping PIN 82
Enabling and Disabling Hopping..... 82
GPS Push 83
GPS Push State..... 83
Privacy Key 83
Preamble Time 83
IO Settings 84

RS232 Connection 84
RS232 Network Encryption 84
RS232 Out (async. Indications) 84
RS232 Baud Rate 85
External Alarm Type 85
Antenna Select Behavior 85
Antenna 1 85
Antenna 2 85
Modes 87
Mute 88
Network 90
Noise Reduction (NR) 93
RF Settings 94
Rx Preamp 94
Tx Over Beep 94
Tx Timeout 95
Noise Blanker 95
Tx Power Level 95
AGC Hang 95
Broadcast Filter 95
Scanning 96
Scan Settings 97
Secure Display Mode 100
Security Settings 101
Use OEM Selcall Privacy Key 102
OEM Selcall Privacy Key 102
Frequency Hop PIN 102
Frequency Hop Rate 102

OEM Secure Type 102
OEM Secure Key 102
Secure Digital Voice/Data Key 103
Digital Voice Baud Rate 103
Selcall Secure Call Hop Rate 103
Selcall Secure Call Code 103
SDV/4026 Programming Mode 103
Service Mode 103
Enable Power On PIN 104
Transceiver Lock 104
Over the Air Zeroise (OTAZ) 104
Zeroise 104
Remote Access Password 104
Stealth Mode 105
Theme Schedule 106
Tuning 107
Zeroise 108

INSTALLATION 7 109
Introduction 110
Installing a Secondary Control Handset 111
Manpack Installations 112
Control Handset Mounting 113
Battery Pack 115
Tactical Antenna Options 122
Tactical Broadband Dipole Antenna (2090-02-03) 127
Tactical Tuned Wire Dipole Antenna (2090-02-01) 130
Mobile Installations 133

PRC-4090 System Docking Station – Rear 134
Assembly..... 135
SDS Feet Configurations..... 136
Handset Docking Station Configurations 137
Complete Mobile Assembly..... 140
2019 Automatic Tuning Mobile HF Antenna 145
2018 Mobile Magnetic Loop Antenna..... 156
Base Station Installations 158
Assembly..... 159
Cooling Fan 161
Installing the Cooling Fan 161
Connection Diagram 162
Site Selection Recommendations 164
Antennas 166
912 Multi wire Broadband Dipoles..... 166
4017 Automatic Tuning Horizontal Dipole Antenna..... 168
4011 Automatic Antenna Tuner for Base Station Installations 171
Marine Installations.....184

APPENDICES 8.....189
Appendix 1 - Specifications 190
Appendix 2 - Connectors.....194
Appendix 3 - Overview of HF Operation 212
Appendix 4 - BITE Test 216

Warranty Statement 219
Contact Details..... 220
Index 221

INTRODUCTION 1

This chapter contains the following sections:

- Introduction
- Terms and Abbreviations
- The Barrett PRC-4090 HF Transceiver Overview

Introduction

The Barrett PRC-4090 Tactical Transceiver is an SDR based HF SSB transceiver with a frequency range of 1.5 to 30 MHz in transmit and 250kHz -30MHz in receive. The Barrett PRC-4090 is designed using the latest technology enabling a physically small package with a full feature complement.

Designed to operate in the most arduous environments, as encountered in portable, off-road vehicles, vessels and aircraft environs, the Barrett PRC-4090 will provide many years of efficient and trouble free service.

The Barrett PRC-4090 supports features such as digital voice, data transmission and remote diagnostics as well as established features such as Selective Call (Selcall), direct dial telephone connection to base stations fitted with telephone interconnect systems (Telcall), GPS location, 2G and 3G ALE (Automatic Link Establishment) and frequency hopping. These features make the Barrett PRC-4090 HF Transceiver one of the most economical and versatile HF transceivers available today.

Up to 1000 channels are available to be field or workshop programmable. Auxiliary features such as Selcall, Telcall, scanning, mute status, alarm system etc. can be individually enabled or disabled for every channel as required to suit your operation.

The Barrett PRC-4090 Transceiver caters for increased use of HF data transmission for Internet email access and point-to-point data applications, by providing a comprehensive data modem interface port, high speed transmit-to-receive switching, a high stability frequency standard and an efficient cooling system option.

The Barrett PRC-4090 is operated by a smartphone-style touchscreen, full colour Control Handset. The handset integrates seamlessly into manpack, vehicle and base station installations when used with the cradle and cradle docking station. The streamlined design and unobtrusive size easily mounts to a vehicle dashboard or vessel helm.

The Barrett PRC-4090 Transceiver can be controlled from all major mobile and desktop platforms. Full remote control is available via the Barrett PRC-4090 Remote Control app, providing unprecedented access to all transceiver functionality across all major platforms.

Teamed with other matching Barrett products which include antennas, power supplies, vehicle tracking packages and HF modems, the Barrett PRC-4090 HF Transceiver becomes a powerful tool, providing solutions to many long distance communication requirements.

Important Disclosure

Please note that this manual describes all the features of the PRC-4090 HF SDR Transceiver and that some variants of the PRC-4090 may not have all the features installed.

Illustrations may show accessories, optional equipment or other features which are not part of the standard specification and are not available in individual countries.

Terms & Abbreviations

Term / Abbreviation	Definition
ALE	Automatic Link Establishment
AM	Amplitude Modulation
ARINC	A set of standards as established by Aeronautical Radio, Incorporated (ARINC).
Call History	A list containing details of the last thirty calls received.
CCIR	One of many possible Selcall formats as defined by the Consultative Committee on International Radio (CCIR).
CF	Custom Filter selection
CW	Continuous Wave (used for Morse code)
dB	Decibels
dBm	Power ratio in decibels (dB) of the measured power referenced to one milliwatt (mW).
DSP	Digital Signal Processing
ESU	Encryption Synchronisation Unit
FHSS	Frequency Hopping Spread Spectrum
GPS	Global Positioning System
HF	High Frequency
INT	International Selcall format
LCD	Liquid Crystal Display
LSB	Lower Sideband
LUF	Lowest Usable Frequency
MUF	Maximum Usable Frequency
OEM	Original Equipment Manufacturer, OEM Selcall Format
OTG	On-The-Go (USB)
PCB	Printed Circuit Board
PEP	Peak Envelope Power
PIN	Personal Identification Number
PRC	Portable Radio Communications
PSTN	Public Switched Telephone Network

Term / Abbreviation	Definition
PTT	Push to talk
Receive Only Channel	A channel that receives calls but does not transmit calls.
Revertive Tone / Signal	An acknowledgment signal automatically transmitted from a station receiving a Selcall.
RF	Radio Frequency
RFDS	Royal Flying Doctor Service
Scan Table	A list of channels used when scanning for incoming calls.
Selcall	Selective Calls
SCF	Suppressed Carrier Frequency
SDR	Software Defined Radio
SDS	System Docking Station
SSL	Signal Strength Level
Station ID	The ID of the station being called (the receiving station's Self ID).
Self ID	The programmed address identification number of a local station. (Used by other stations to call you.)
SMS	Short Message Service
SSB	Single Sideband (a transmission format)
Telcall	Telephone call using the Selective Call protocol.
USB	Upper Sideband
VSWR	Voltage Standing Wave Ratio

The Barrett PRC-4090 HF Transceiver Overview

Manpack Configuration

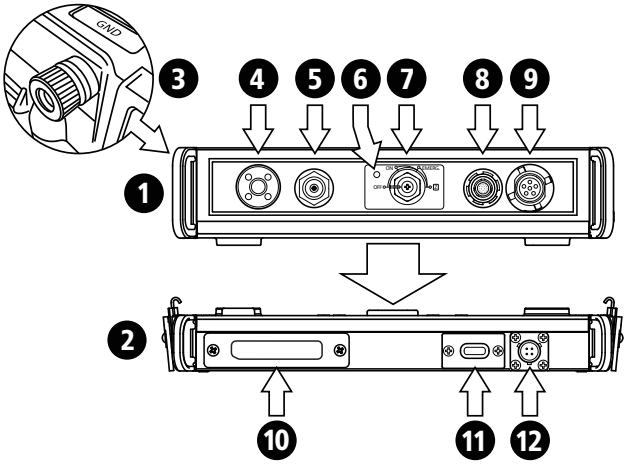

1	PRC-4090 HF SDR Transceiver (P/N 4090-00-01)
2	PRC-4090 16Ah battery pack (P/N 4090-03-05)
3	Earth stud
4	Whip antenna connection
5	50 Ohm antenna connection
6	LED status indicator
7	On/Off, Emergency and Zeroise switch
8	PRC-4090 Control Handset connector
9	H250 Handset connector
10	Battery isolator
11	Battery indicator
12	Battery charger connector

Mobile Configuration (front)

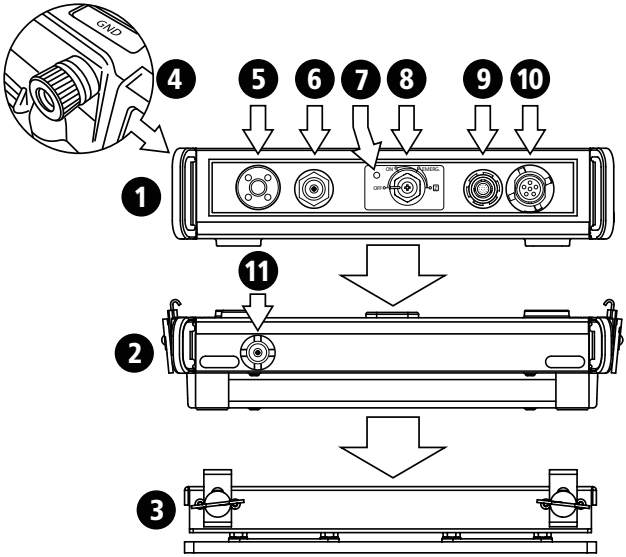

1	PRC-4090 HF SDR Transceiver (P/N 4090-00-01)
2	PRC-4090 System Docking Station (P/N 4090-05-00)
3	PRC-4090 Anti-vibration plate (P/N4090-05-07)
4	Earth stud
5	Whip antenna connection
6	50 Ohm antenna connection
7	LED status indicator
8	On/Off, Emergency and Zeroise switch
9	PRC-4090 Control Handset connector
10	H250 Handset connector
11	RF Connector (from 50 Ohm output)

Mobile Configuration (rear)

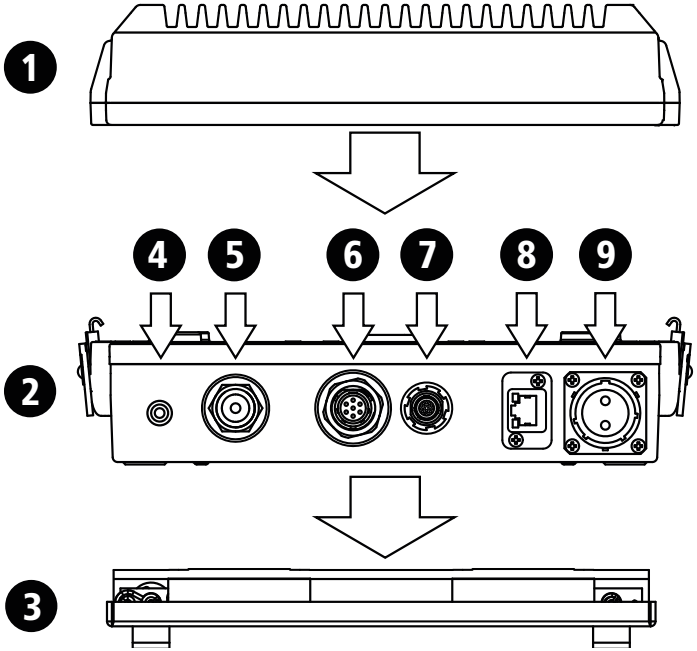

1	PRC-4090 Transceiver (P/N 4090-00-01)
2	PRC-4090 System Docking Station (P/N 4090-05-00)
3	PRC-4090 Anti-vibration plate (P/N 4090-05-07)
4	Ground
5	Coaxial connection (RF out)
6	ATU Connector
7	Aux. PRC-4090 Control Handset connector
8	Ethernet connection (RJ45)
9	DC in (+11 V to +28 V DC)

Base Station Configuration (front)

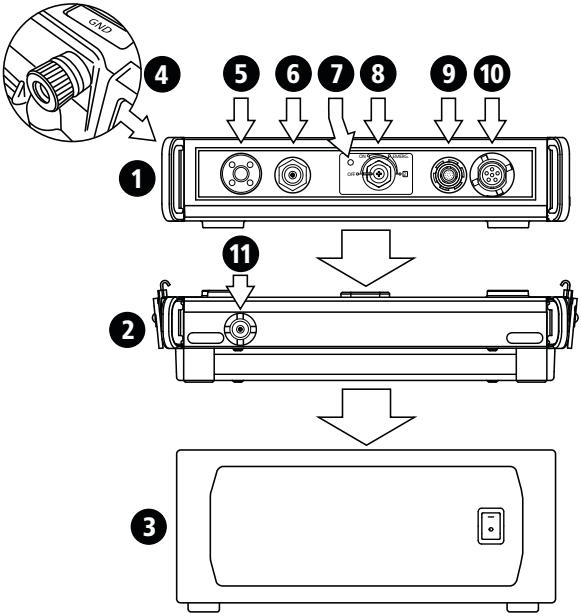

1	PRC-4090 Transceiver (P/N 4090-00-01)
2	PRC-4090 System Docking Station (P/N 4090-05-00)
3	PRC-4022 Power Supply (P/N 4090-06-01)
4	Earth stud
5	Whip antenna connection
6	50 Ohm antenna connection
7	LED status indicator
8	On/Off, Emergency and Zeroise switch
9	PRC-4090 Control Handset connector
10	H250 Handset connector
11	RF Connector (from 50 Ohm output)

Base Station Configuration (rear)

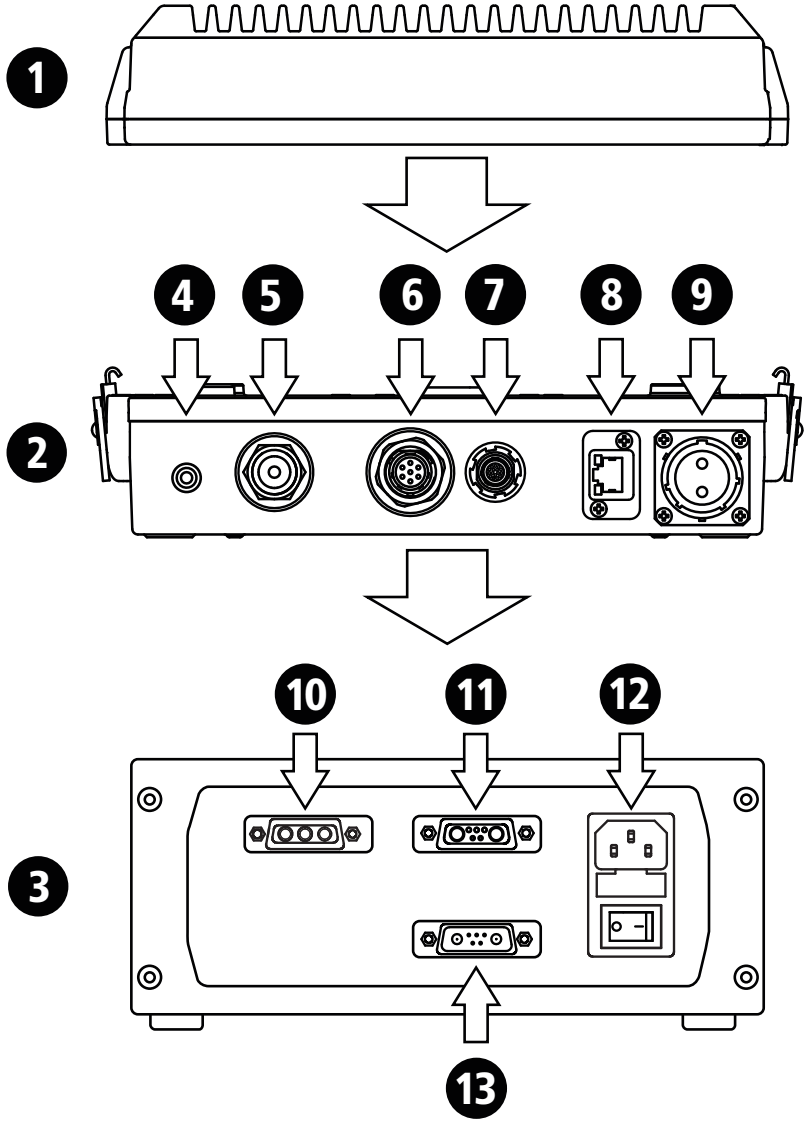

1	PRC-4090 Transceiver (P/N 4090-00-01)
2	PRC-4090 System Docking Station (P/N 4090-05-00)
3	PRC-4022 Power Supply (P/N 4090-06-01)
4	Ground
5	Coaxial connection (RF out)
6	ATU
7	Aux. PRC-4090 Control Handset connector
8	Ethernet connection
9	DC in (+11 V to +28 V DC)
10	DC out (24 V DC)
11	Auxiliary out (13.8 V DC)
12	AC in (100-240 V AC)
13	Battery backup (13.8 V DC)

Control Handset (Front)

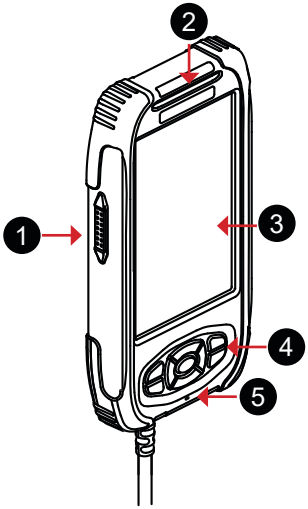

1	PTT button
2	Handset Speaker
3	LCD Display
4	Keypad
5	Microphone

Control Handset (Rear)

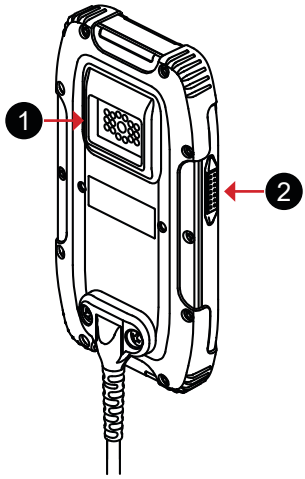

1	Hot-shoe connection to cradle and USB interface unit
2	PTT Button

Cradle and Handset Docking Station (rear)

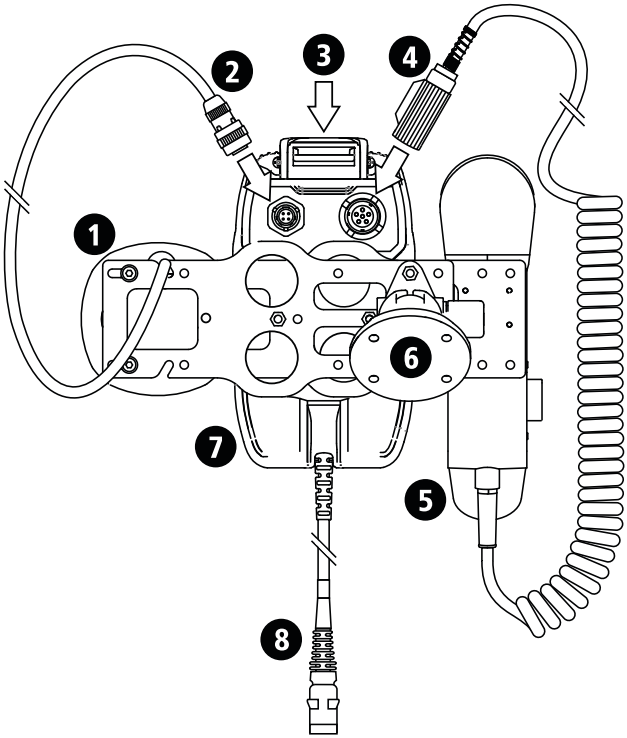

1	External speaker (3W, 8 Ohm)
2	External Speaker connection
3	USB connection for WiFi adaptor or programming
4	H-250 handset connection
5	H-250 Handset
6	Control Handset Docking Station (P/N 4090-05-03)
7	Control Handset (P/N 4090-01-09)
8	Connection to PRC-4090 Transceiver

Auxiliary Cables

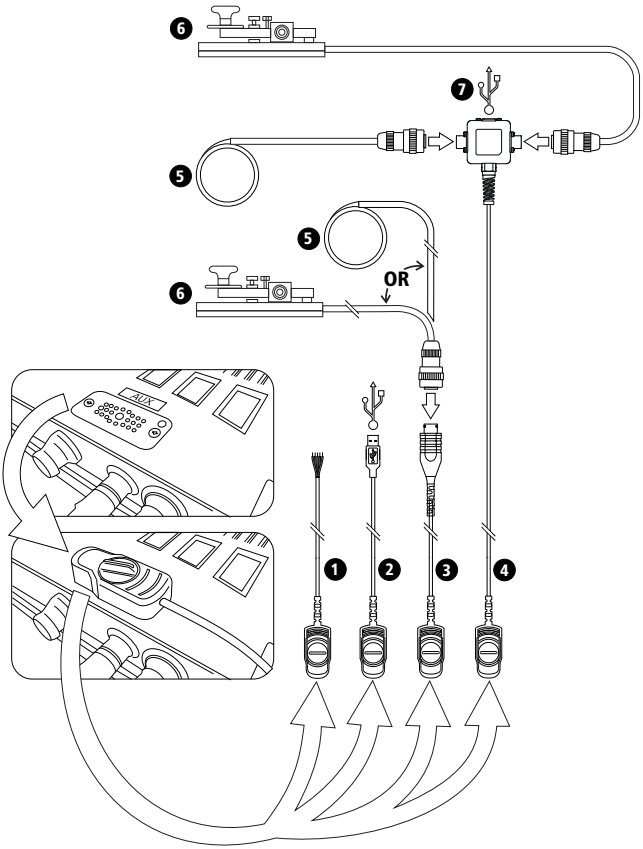

1	Hotshoe cable (unterminated) (P/N 4090-01-34)
2	Hotshoe adapter cable to USB male (P/N 4090-01-32)
3	Hotshoe adapter cable to GPS or CW key (P/N 4090-01-31)
4	3 port accessory hub (P/N 4090-01-39)
5	GPS adaptor (P/N 2090-01-24)
6	CW Key (P/N 2090-01-07)
7	USB connection

BASIC OPERATION 2

This chapter contains the following sections:

- Starting the Transceiver
- Display
- Antenna Type
- Channel Selection
- Receiving and Transmitting -Voice Call
- Making an Emergency Call

Starting the Transceiver

Ensure the transceiver is attached to a power source appropriate for your situation.

Turn the switch from the off position to the on position.

Reverse the procedure to power off.

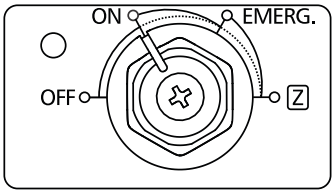

LED status:

Power on: Constant green

Emergency call: Flashing green (rapid flashing green when transmitting)

Zeroise: Flashing red, then solid when complete

Lift and turn the switch to initiate an emergency broadcast (page 27) or to zeroise the transceiver (see page 108).

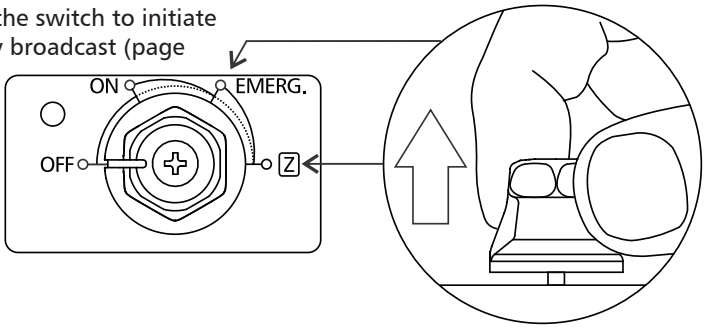

Keypad

There are seven keys on the keypad. Some keys have multiple functions assigned to them depending on when or how long the key is pressed.

Key	Function
▲	Channel Up / Scroll up
▼	Channel Down / Scroll down
◀ ▶	Scroll left and right
ENT	Enter / Set a menu item

Key	Function
CALL	Make a call
BACK	Clear / Back one step
+	Volume Up
−	Volume Down

Display

1	Tune Status	10	Modulation Mode
2	Date and Time	11	Receive/transmit status
3	ALE Status	12	Receive Strength/Transmit Power Indicator
4	Digital Voice/Secure Digital Voice	13	Swipe Menu Access
5	Status Indicators (see page 20)	14	Channel Label
6	Operation icons (see page 20)	15	Channel Frequency
7	ALE (Channel) Status	16	Channel Number
8	Selcall Network	17	ALE 3G Sync status
9	Transmit Power		

Status Indicators

Access Point

GPS

WiFi Client

USB Storage

Low Voltage

Missed Call

Screen Lock

Ethernet

Busy

Networked RS232

Battery charge

A number on the WiFi Client icon or the Networked RS232 icon indicates the number of connections currently made to that device.

Operation Icons

Toggles Digital Voice or Secure Digital Voice encoding on or off (if fitted).

Opens the channel select menu.

Manually tunes the antenna.

Enables/disables Frequency Hopping (if fitted).

Cycles through low, med, high or no noise reduction.

Toggles mute on/off. See page 88 for further mute details.

Enables/disables scanning.

Swipe Menu

To access this menu, either swipe horizontally across the screen from the left edge to drag open the swipe menu or press and hold the right arrow key. The icons (other than Settings) appear green when enabled and white if disabled.

Accessing the Swipe Menu

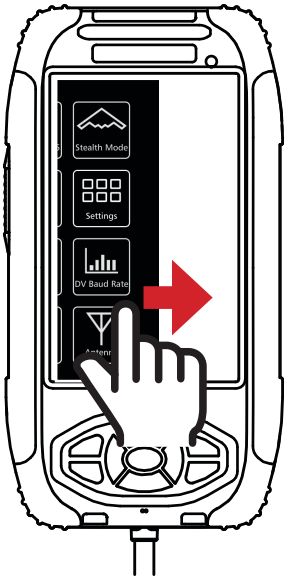

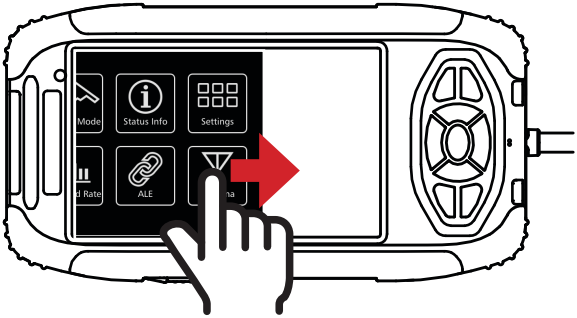

Swipe Menu

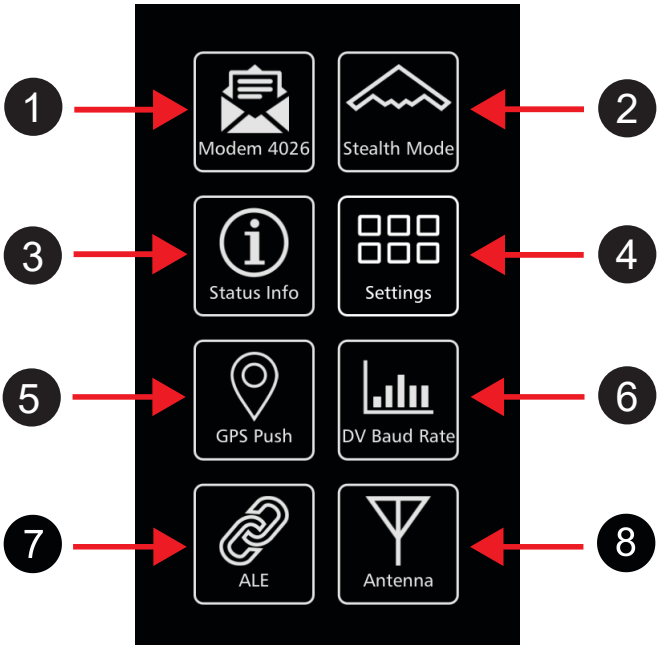

1	Modem Select - Tap to enable internal modem for data use
2	Stealth Mode - When active, all lights and sounds are disabled
3	Status Information - Displays IDs and mechanical information
4	Settings Menu - Access to Settings menus
5	GPS Push (if fitted) or Display Settings
6	DV Baud Rate - Quick access to Digital Voice Baud Rate settings
7	ALE Menu - Quick access to ALE menu
8	Antenna Select - Quick access to antenna select menu

The items displayed in the Swipe menu are determined by the options installed in the transceiver. Each of the Modem, Stealth Mode and GPS Push icons will turn green when active.

Status Info

The Status Info menu displays important information about the transceiver and the network.

It can be accessed from the Swipe Menu.

It displays the following:

Power: Receive and transmit voltage use, transceiver internal temperature and current draw.

Battery: If in Manpack Configuration, this line will display the time until battery needs to be charged, or if charging, the time until battery is fully charged as well as the charging current.

GPS Position: The current GPS position of the transceiver (if acquired).

IP Address: The IP address of the transceiver (if connected to an IP network).

Selcall ID: The primary four and six digit selcall IDs of the transceiver.

ALE 2G Self ID: The Self ID of the transceiver in an ALE 2G network (optional)

ALE 3G Self ID: The Self ID of the transceiver in an ALE 3G network (optional)

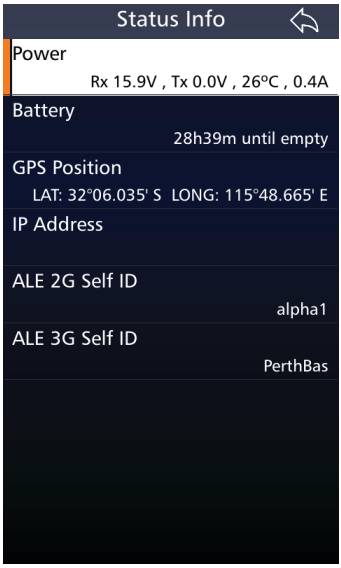

When charging battery:

When not charging battery: