Cooling Fan

The cooling fan is an optional extra which may be added to the PRC-4090 transceiver for situations where high volumes of data or Digital Voice transmissions may cause the transceiver's internal temperature to rise above 65°C.

The cooling fan requires no user input as it is temperature controlled by software, automatically activating when necessary.

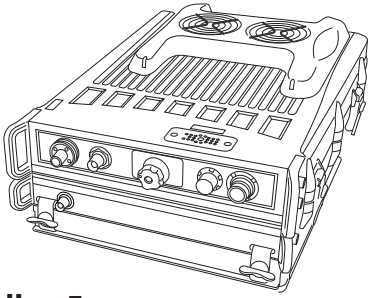

Installing the Cooling Fan

Attach the cooling fan to the transceiver by carefully aligning the connector pins located beneath the cooling fan with the socket on top of the transceiver as shown below.

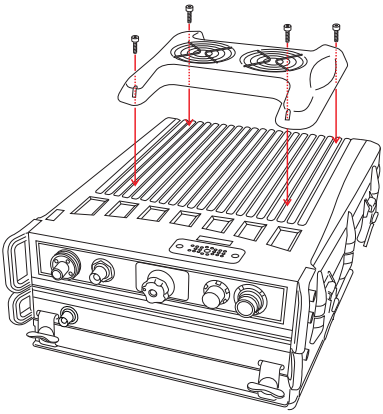

Four screws (located in the four corners of the cooling fan) are used to secure the cooling fan to the SDR.

To uninstall the cooling fan, reverse the installation procedure.

Connection Diagram

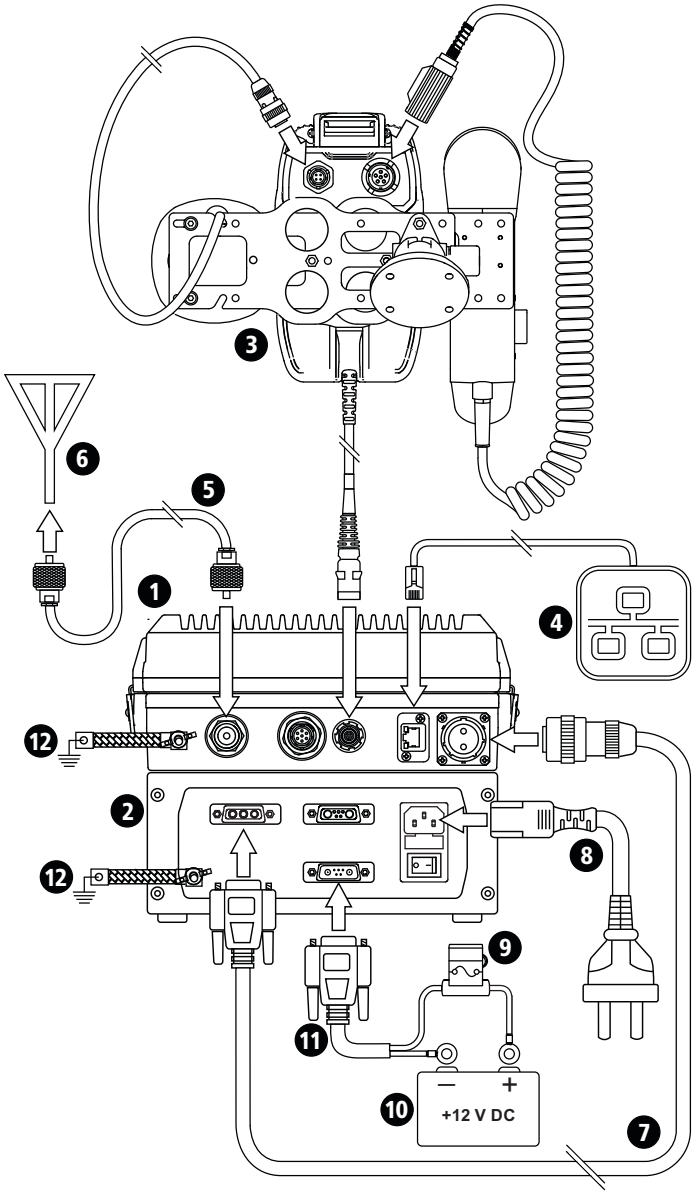

1	Barrett PRC-4090 HF SDR Transceiver (P/N 4090-00-01) and System Docking Station (P/N 4090-05-00)
2	PRC-4022 AC Power Supply (P/N 4090-06-01)
3	PRC-4090 Control Handset (P/N 4090-01-09) and Control Handset Docking Station (P/N 4090-05-03)
4	IP Network connection via RJ45 cable
5	Coaxial cable
6	Antenna
7	Power cable from Barrett PRC-4090 SDS to PRC-4022 Power Supply (P/N 4090-03-02)
8	IEC mains cord (P/N SA-00020)
9	In-line Fuse
10	12 V (or 24 V) DC Battery
11	3 metre battery back-up cable for PRC-4022 Power Supply (P/N 4090-06-08)
12	Ground (earth)

Site Selection Recommendations

The success of every HF Radio system is primarily measured by its ability to receive weak signals and to transmit RF power efficiently. A number of important factors need to be considered to achieve success. These include: frequency selection, time of day and ambient noise at the receiver site. Frequency and time of day are factors which can be used to calculate the maximum usable frequency (MUF) and lowest usable frequency (LUF) using prediction software freely available on the internet. A typical example of this is VOACAP, http://www.voacap.com/prediction.html

Site selection and system design go hand in hand and should be considered before any equipment is purchased. Forcing the radio system into an unsuitable site will undoubtedly result in disappointing if not unworkable performance of the system. Little can be done to improve an installed system if, for example, the ambient RF noise is unacceptably high.

It is recommended that site evaluation be done before any system designs are finalised to avoid system performance disappointment.

The following should be considered when choosing a position for the transceiver:

Operating Convenience

The transceiver should be placed so that the operator is comfortable and any required facilities are easily accessible.

Air Circulation

The PRC-4090 relies on air flow around cooling fins to dissipate heat generated by the transmitter. The mounting position must allow free air flow around these fins.

Proximity of Transceiver to Antenna

When using RG-58 coaxial cable from the transceiver to the antenna, a cable length of no more than 30 metres is recommended. Should a run of more than 30 metres be required, it is recommended that a low loss coax such as RG-213 or RG-8 be used.

It is recommended that the transceiver chassis is connected to ground (earth) using the post on the rear panel to stop pick-up of unwanted noise from local power supplies and electrical equipment.

Power Supply

When 24 V DC is supplied to the PRC-4090 transceiver, the PEP Voice output power will achieve 150 W. This is only available with the PRC-4090 System Docking Station.

Power output regulation is performed automatically based on the DC voltage presented to the transceiver DC input connector. The Barrett 4022 Power Supply is available in the BC402201 (24 V DC) version. This power supply version is capable of operation with AC mains input voltage between 88 and 256 V AC.

In base station installations where no mains supply is available, various Barrett solar power supply solutions are available depending on the system configuration requirement.

Note: Some installations use an AC battery charger to float charge the supply battery. Battery chargers can produce electrical noise from the rectifier diodes. This noise causes a static type of interference in the receiver. It may be necessary, therefore, to switch off the battery charger whilst the transceiver is in use. If float charging of batteries is required for installations with unreliable AC power supply, it is recommended that BC402201 be used as it provides a three stage charge facility to maintain a battery without the noise problem described above.

Voltage Drop

The average current consumption of the transceiver is low but during transmission of voice peaks, high current is needed for short intervals. This means that the power supply cable must be heavy enough to supply these short duration current peaks without excessive voltage drop. Preferably, only use the power cable supplied with the transceiver. If extra cable is required, use a cable with a conductor square area of no less than 8 mm^2. Unwanted voltage drop will also occur if incorrect wiring techniques such as poor choice of connection points and incorrect use of terminal lugs are used.

Protection Fuse

The transceiver is provided with adequate internal protection from over-current or short-circuit. The fitting of an additional external fuse is still considered necessary for both the protection of the transceiver and to ensure that in the event of damage to the cable, a fire does not occur. The fuse used must be installed in the active wire as close as possible to the battery, and must be of a type which has a low voltage drop at the peak currents expected.

Note: In-line 3AG glass fuses are not suitable. An ATC automotive blade type fuse rated at 25 A with a suitable high current ATC fuse holder rated at 30 A or more should be used. These type of fuses and holders are contained in our standard installation kit (P/N BCA40004) or are available individually (P/N BCA20021).

Antennas

The antenna is a most critical part of the complete transceiver installation. It must accept the output power from the transmitter, radiate that power with minimum loss and in the receive mode, accept weak signals for input to the receiver.

Incorrect antenna installations will yield poor system performance and are often the cause of complaints of poor transceiver performance.

A range of antennas is available from Barrett to suit most small fixed stations. Detailed instructions are included with each antenna.

912 Multi wire Broadband Dipoles

(P/N BC91200, BC91202 and BC91203)

Barrett 912 broadband dipoles are ideal for base stations that require operation on multiple frequencies throughout the HF spectrum using a single antenna.

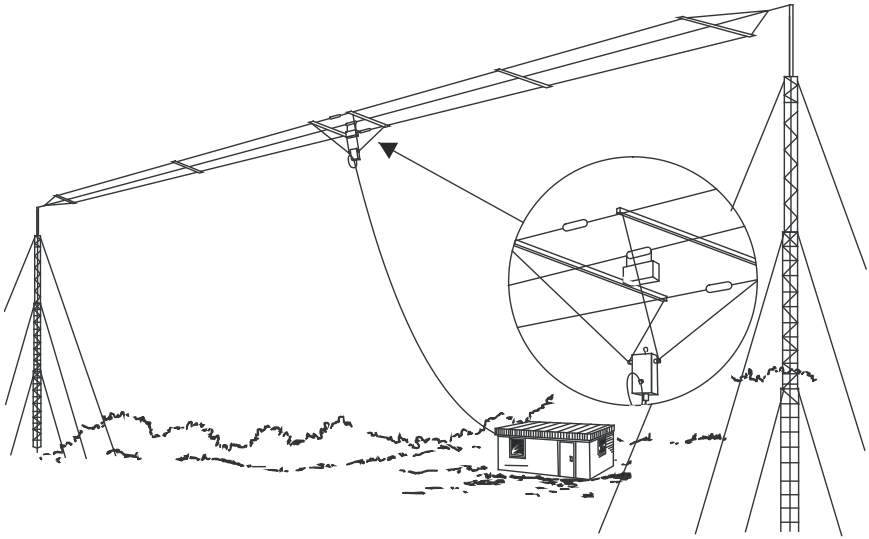

The Barrett 912 antenna can be mounted either in a horizontal or inverted 'V' configuration as illustrated in the following diagrams. In the horizontal configuration, the major radiation direction is broadside to the antenna. When mounted in the inverted 'V' configuration, the antenna becomes fairly omni-directional. In the horizontal configuration, the minimum distance between the masts is 32 metres and the recommended mast height is 15 metres. In the inverted 'V' configuration the recommended mast height is 15 metres and at this height the 2 metre stub masts are each installed at a minimum of 19 metres from the mast base. In this configuration the mast must have an offset or out-rigger bracket, at least 0.8 metres long, to hold the antenna away from the mast. Support towers may be either lattice masts as illustrated, tubular telomasts or other support structures that may be available locally. It is recommended that the halyards used to support the antenna be either UV stabilised Dacron cord or wire rope and that pulleys should be of stainless steel construction.

Install the antenna as illustrated in the diagrams, in the inverted 'V' configuration the eye on the top of the balun is used to attach the support halyard. In the horizontal configuration the balun hangs below the antenna.

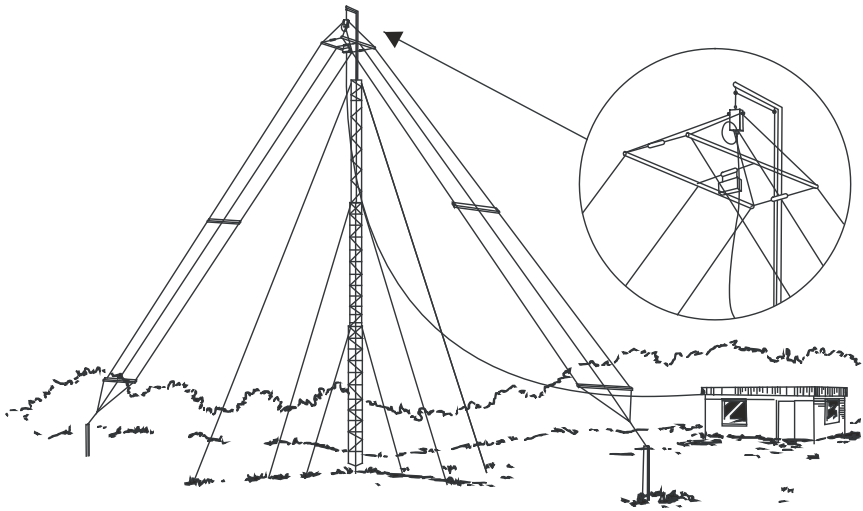

As with all antenna installations ensure the antenna is as far from sources of electrical interference as possible and in a position that makes it impossible for the antenna to come in contact with high voltage overhead mains wiring.

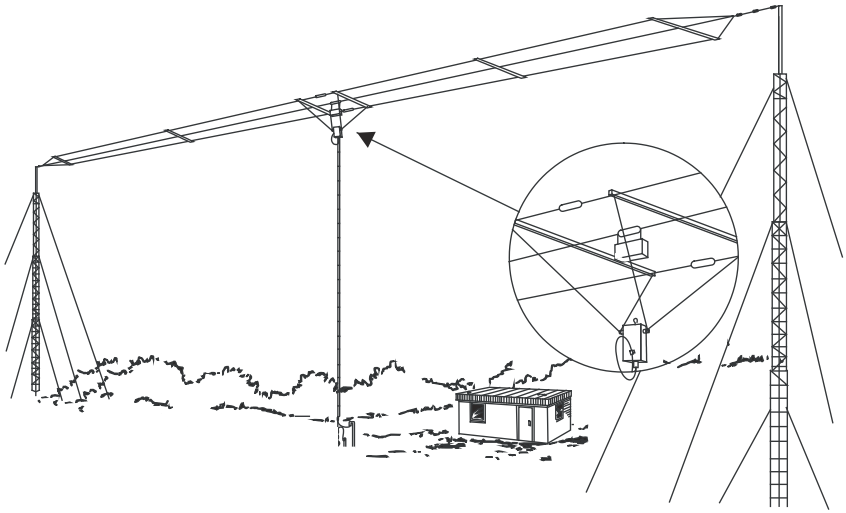

912 Multi-wire broadband dipole antenna - 1Kw (27M/54M) (P/N BC91203/BC91207)

4047 Automatic Tuning Horizontal Dipole Antenna

The Barrett 4047 Automatic Tuning Horizontal Dipole Antenna is designed for conditions where area is limited but a high performance base station antenna is still required. It consists of composite radiation elements driven by an automatic antenna tuner to allow operation from 3 to 30 MHz. The tuner provides broadband impedance matching during scan mode (receive) operation, for reliable link establishment using modern radio protocols.

The antenna is designed for operation on a 6 to 10 metre standard 50 mm mast making it simple to install. With a packed length of 2.1 metres the antenna can be easily transported by air.

Assembly fixtures are supplied to assist in mounting the antenna to an existing mast, tower or pole. Alternatively, a range of suitable masts can be supplied with the antenna.

The tuner has a memory system that stores tuning information for each channel after an initial tune sequence with unlimited capacity.

For further information regarding the 4047 Automatic Tuning Horizontal Dipole Antenna, please consult the 4047 Automatic Tuning Horizontal Dipole Antenna User Manual (P/N BCM404700).

Connection Details for a PRC-4090 Transceiver and 4047 Automatic Tuning Horizontal Dipole Antenna

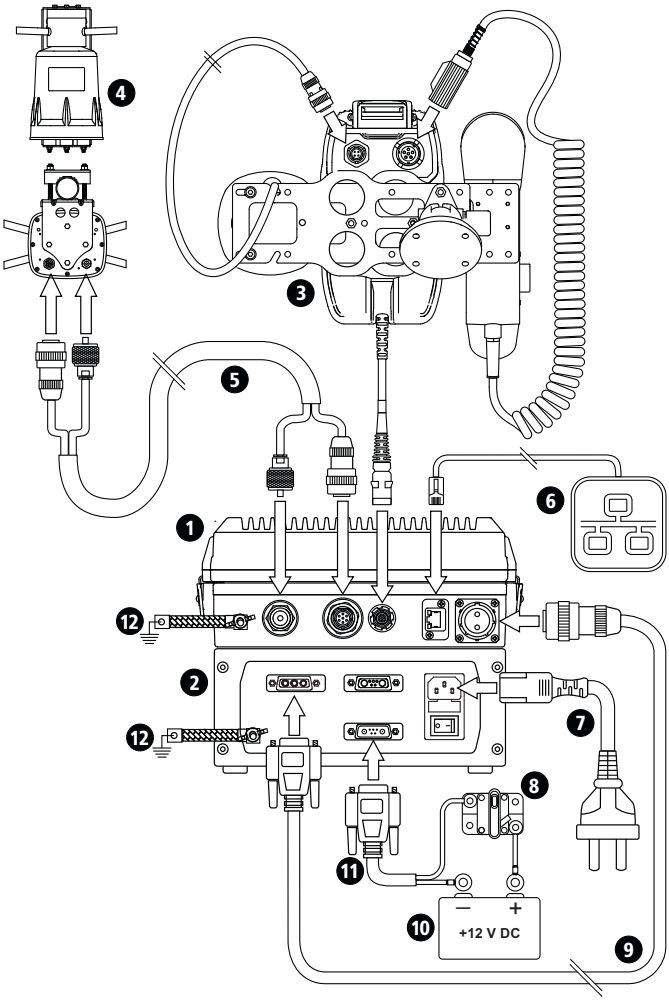

1	Barrett PRC-4090 HF SDR Transceiver (P/N 4090-00-01) and System Docking Station (P/N 4090-05-00)
2	PRC-4022 AC Power Supply (P/N 4090-06-01)

3	PRC-4090 Control Handset (P/N 4090-01-09) and Control Handset Docking Station (P/N 4090-05-03)
4	4047 Tactical HF ATU base antenna (P/N 4047-00-01)
5	Coaxial / Control Cable (P/N 4017-01-01)
6	IP Network via RJ45 cable
7	IEC Mains cable (P/N SA-00020)
8	Circuit breaker
9	Power cable from Barrett PRC-4090 SDS to PRC-4022 Power Supply (P/N 4090-03-02)
10	12 V (or 24 V) DC Battery
11	3 metre battery back-up cable for PRC-4022 Power Supply (P/N 4090-06-08)
12	Ground (Earth)

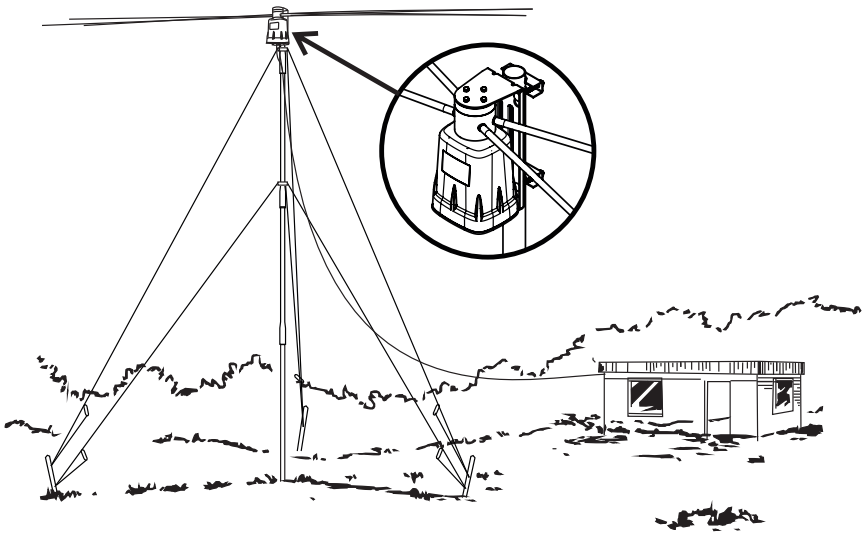

4045 Automatic Antenna Tuner for Base Station Installations

Antennas such as long-wires, vertical whips and loop configurations require an Antenna Tuning Unit to operate correctly.

Housed in a fully weatherproof enclosure, the 4045 will tune long wire antennas effectively up to a length of 10 metres and wire loop antennas or whip antennas over a frequency range of 2 to 30 MHz. Tuning is rapid, typically less than one second the first time RF is applied, either whilst the operator is talking or when the "Tune" control is activated on the transceiver (see page 107).

The 4045 tuner features a memory facility that stores the configuration required to tune to a frequency. On any subsequent use of that frequency, the 4045 reconfigures to the stored settings in typically less than 130 milliseconds. Following initial tuning, the antenna's VSWR is monitored. If any significant variation occurs, the 4045 will re-tune the antenna automatically.

The 4045 is supplied complete with coaxial / control cable having an overall length of 30 metres (P/N 4017-01-01). The cable is a composite design incorporating coaxial, power supply and control cables.

Antenna

The following points should be considered when mounting an antenna with the 4045:

- The antenna should be mounted as far away as possible from buildings, trees, vegetation and sources of electrical interference. If metallic masts or supports are used, arrange insulators to ensure the antenna is spaced at least two metres from the mast.
- The radiating part of the antenna starts at the tuner. The base of the antenna should be centrally located as per above criteria.
- High voltages are present on the antenna system. The antenna tuner and antenna should be located or protected so that there is no possibility of accidental contact or danger of RF burns.

Transceiver and Tuner Mounting

The transceiver should be mounted in a suitable position allowing easy operator access. The antenna tuner should be mounted, preferably out of the weather, and as close to the ground (earth) point as possible. The interconnect cable supplied with the antenna tuner should be routed, away from other cables, back to the transceiver and connected as indicated in the diagram. The maximum interconnect cable should be less than 25 metres.

Ground (Earth) System

The ground (earth) system is a key part of the overall antenna system and consequently the system operation. An inadequate ground (earth) system is the primary cause of poor performance and tuning problems. Unless a good ground (earth) system (counterpoise) can be provided, there is little point in installing the antenna. In areas of good ground (earth) conductivity (i.e. the terrain is always damp), an effective ground (earth) can be made through a grounding (earthing) rod. This should be a minimum 1.5 metres in length and should be installed as close to the tuner as possible. A suitable grounding (earthing) can be purchased from Barrett Communications (P/N BCA90056). Several rods bonded together will improve the ground (earth) contact. In some cases metal water pipes may be used as a ground (earth) providing:

- The water pipe is close to the tuner and the water pipe enters the ground close to the tuner.
- There are no joints or couplings in the pipe that will increase the resistance path to ground.
- The water pipe enters soil with good conductivity.
- A low resistance joint is made with the water pipe.

Frequently the ground (earth) conductivity will not be sufficient to provide a satisfactory ground (earth) for the Barrett 4045 tuner. This will almost certainly be the case in well drained sandy soils or on rock. In these cases, a counterpoise must be used as a ground (earth) system. This will also be the case in rooftop installations where no existing ground plate (such as metal roofing) exists.

The number of radials required for an effective counterpoise depends on the soil quality, dampness and other factors which affect the conductivity of the soil. The more radials used, the better will be the performance of the antenna/ATU combination especially at lower frequencies. This manual suggests a minimum of 20 radials, but optimum performance at low frequencies is not guaranteed.

The radials of the counterpoise need only be of much thinner cable i.e. 5.48mm^2 (#1 #2 SWG) preferably copper wire. RG58 Coaxial cable may be used. At the base of the antenna, the radials all couple together at a common well bonded antenna ground (earth) point. The radials should be buried into the ground to a minimum of 200 mm depth.

Note: To accomplish reliable ATU tunes at frequencies below 5 MHz, it is not uncommon, with poor conductive soil conditions, to require up to 120 radials each of up to 70 m length, requiring thousands of metres of cable and a lot of trenching. This is impractical and is the reason we do NOT recommend Whip/ATU antenna for land based systems.

Electrical Checkout

After mechanical installation is complete, select the highest frequency to be used on the transceiver. A directional watt-meter may be inserted in the coaxial transmission line between the transceiver and the tuner, although the internal metering of the Barrett PRC-4090 Transceiver is accurate. The tune mode on the transceiver is then energised. Upon application of RF energy, the tuner should start to tune, indicated by the 'clattering' of the tuner relays. After a few seconds the relay noise will cease, the transceiver should indicate "Tune OK" and the watt-meter and PRC-4090 handset should show a low value reflected power consistent with a VSWR of better than 2:1. Select the lowest desired frequency on the transceiver and repeat the above procedure. The result should be the same, except that the tune cycle may take somewhat longer. If the above procedure does not give the results indicated, check that the antenna length and connections are correct and re-check all ground (earth) connections.

Note: When received, the Barrett 4045 automatic antenna tuner memory system will not have any pre-stored tuning information appropriate to your installation. To allow the 4045 to 'learn' its tuning information, simply proceed from one channel to the next allowing the normal tune cycle to take place. Each successful tune is 'memorised' so that when that channel is re-selected the tuner will almost instantaneously retune to that frequency.

Connection Details for a PRC-4090 Transceiver and 4045 Automatic Antenna Tuner in a Base Station Configuration

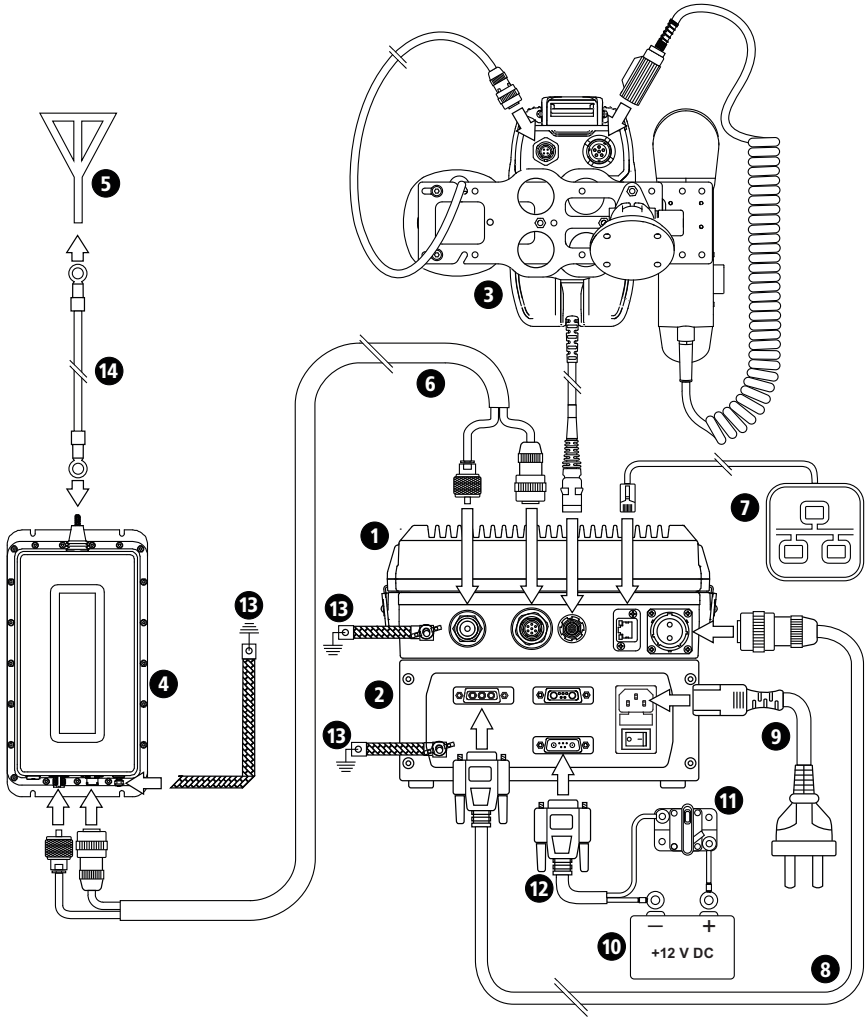

1	Barrett PRC-4090 HF SDR Transceiver (P/N 4090-00-01) and System Docking Station (P/N 4090-05-00)
2	PRC-4022 AC Power Supply (P/N 4090-06-01)
3	PRC-4090 Control Handset (P/N 4090-01-09) and Control Handset Docking Station (P/N 4090-05-03)
4	Barrett 4045 Automatic Antenna Tuner (P/N 4045-00-01)
5	Antenna
6	Coaxial / Control Cable (P/N 4019-00-02)
7	IP Network Connection via RJ45 cable
8	Power cable from Barrett PRC-4090 SDS to PRC-4022 Power Supply (P/N 4090-03-02)
9	IEC mains cord (P/N SA-00020)
10	12 V (or 24 V) DC Battery
11	Circuit breaker
12	3 metre battery back-up cable for PRC-4022 Power Supply (P/N 4090-06-08)
13	Ground (Earth)
14	Antenna Feeder Cable

Connection Details for a PRC-4090 and a Military Whip Installation

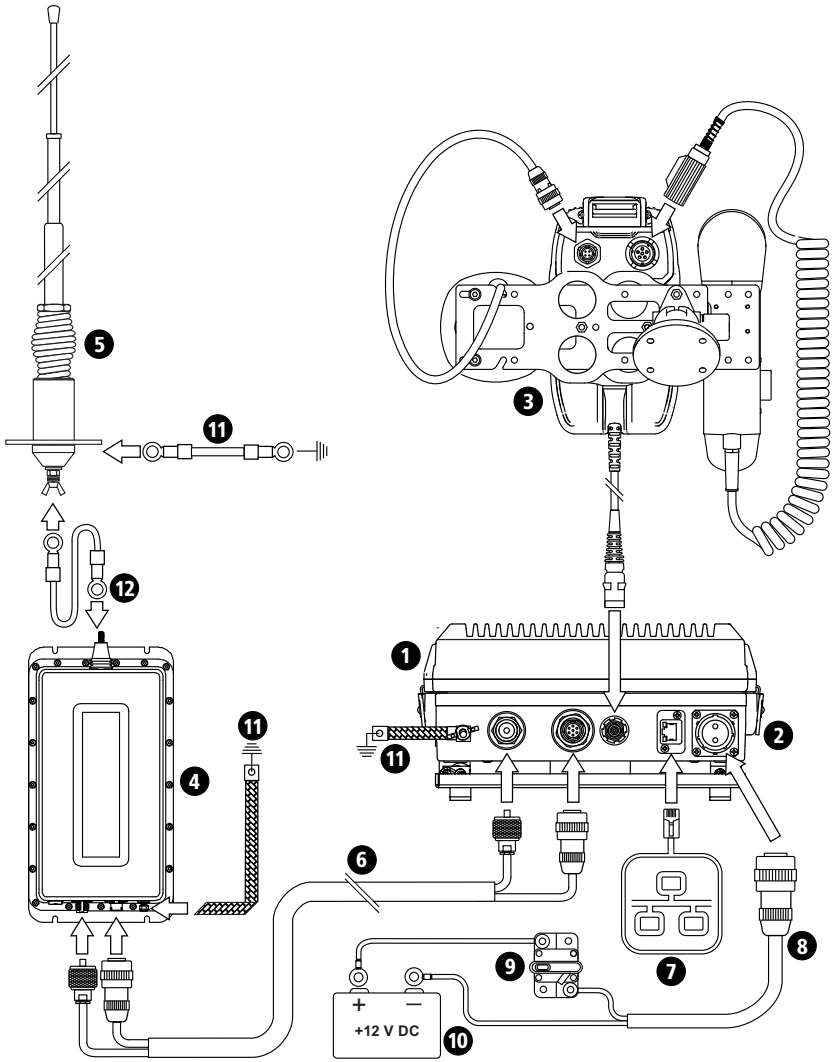

1	Barrett PRC-4090 HF SDR Transceiver (P/N 4090-00-01)
2	Barrett PRC-4090 System Docking Station (P/N 4090-05-00) and Anti-Vibration Mount (P/N 4090-05-07)
3	PRC-4090 Control Handset (P/N 4090-01-09) and Control Handset Docking Station (P/N 4090-05-03)
4	Barrett 4045 Automatic Antenna Tuner (P/N 4045-00-01)
5	Military HF antenna and base sourced from Trival Antene (P/N AP4/M) and whip sections (P/N AD-4/1-3)
6	Coaxial / control cable (P/N 4019-00-02)
7	IP Network Connection via RJ45 cable
8	DC power cable to Battery (P/N 4090-03-06)
9	Circuit breaker
10	12 V (or 24 V) DC Battery
11	Cable from 4045 Automatic Antenna Tuner to military whip (P/N 4019-00-02)
12	Ground (earth)

Tactical Broadband Dipole Antenna (2090-02-03)

The Tactical Broadband Dipole Antenna is a dipole antenna with loading to allow broadband operation. For operation, each side of the antenna is unwound to its full length. Throwing cords are provided that can be used to elevate the antenna or tie it to ground for an inverted V configuration. The antenna will handle continuous data and CW transmission. The antenna can be used in a number of configurations, depending on structures available for elevation.

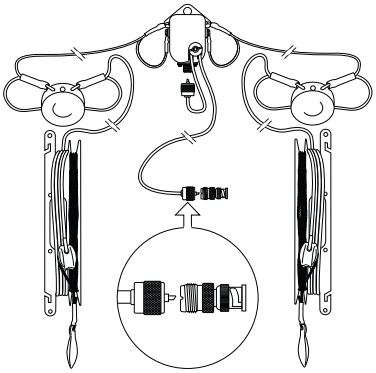

Tactical Broadband Dipole Antenna Configurations

Horizontal Dipole

The horizontal dipole has maximum gain on the broadsides of the antenna and reduced gain along the axis. Height above ground affects radiation angle. Lower heights give higher angle radiation, better for NVIS (short distance). Higher heights give lower radiation angle, better for long distance communication.

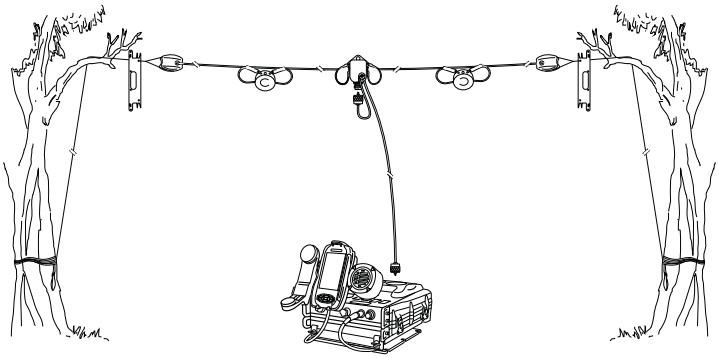

Inverted V

The inverted-V has a more omni-directional pattern than the Horizontal Dipole, with lower maximum gain. The ends of the antenna should be at least 0.5 m above ground. Suitable mainly for NVIS and medium distance.

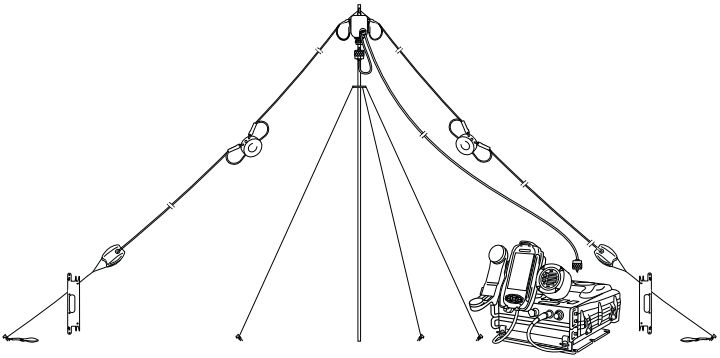

Sloping Dipole

Radiation with the Sloping Dipole becomes more directional, with increased gain in the direction of the lower end of the antenna, and reduced gain towards the higher end.

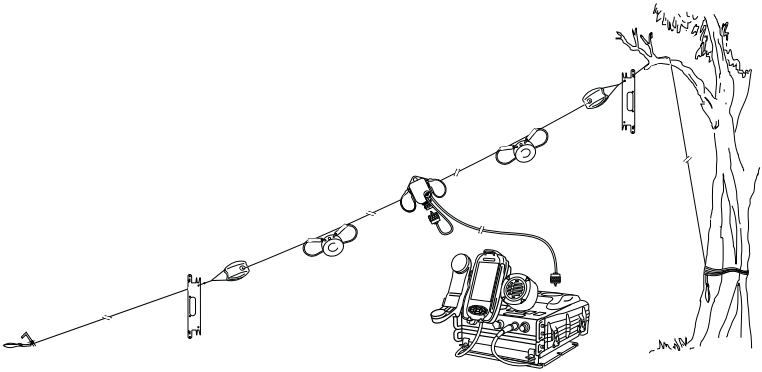

Inverted U

The inverted U has a radiation pattern between that of horizontal dipole and inverted V. For optimum performance, the radiating elements should be fully unwound, and should not touch the ground. Suitable for NVIS to medium distance. Longer distance performance will be enhanced by erecting the antenna at a height of 10 m or more.

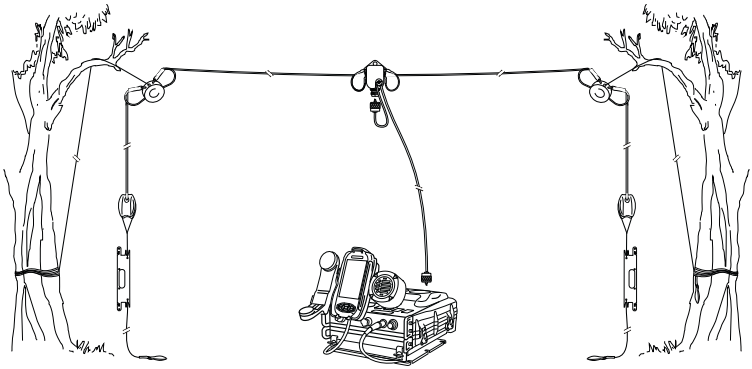

Tactical Tuned Wire Dipole Antenna (2090-02-01)

The Tactical Tuned Dipole Antenna is a tuned antenna with frequency labels to indicate tuned lengths. For operation, each side of the antenna is unwound to the tuned length for the frequency required. For operation at a labelled frequency, the label should be level with the end of the winder as shown in the picture below. Lengths for intermediate frequencies should be estimated and tied off appropriately. The remaining wire remains on the winder. The throwing cord can then be used to elevate the antenna. The antenna will handle 100 W continuous data and CW transmission. The antenna can be used in a number of configurations, depending on structures available for elevation.

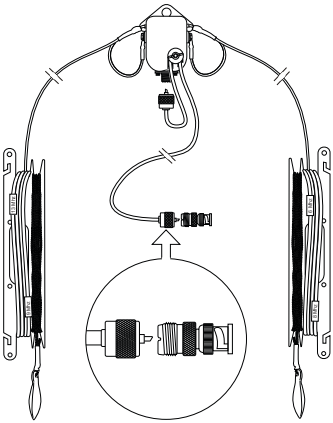

Tactical Tuned Wire Dipole Antenna Configurations

Horizontal Dipole

The horizontal dipole has maximum gain on the broadsides of the antenna, and reduced gain along the axis. Height above ground affects radiation angle. Lower heights give higher angle radiation, better for NVIS (short distance). Higher heights give lower radiation angle, better for long distance communication.

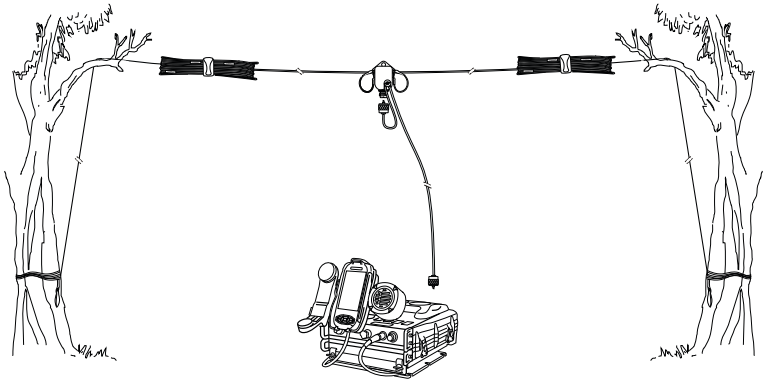

Inverted V

The inverted-V has a more omni-directional pattern than the Horizontal Dipole, with lower maximum gain. The ends of the antenna should be at least 1 m above ground. Suitable mainly for NVIS and medium distance.

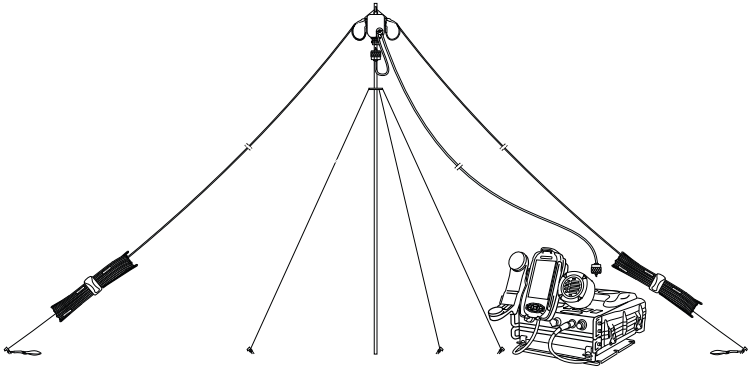

Sloping Dipole

Radiation with the Sloping Dipole becomes somewhat asymmetrical, with increased gain in the direction of the lower end of the antenna, and reduced gain towards the higher end.

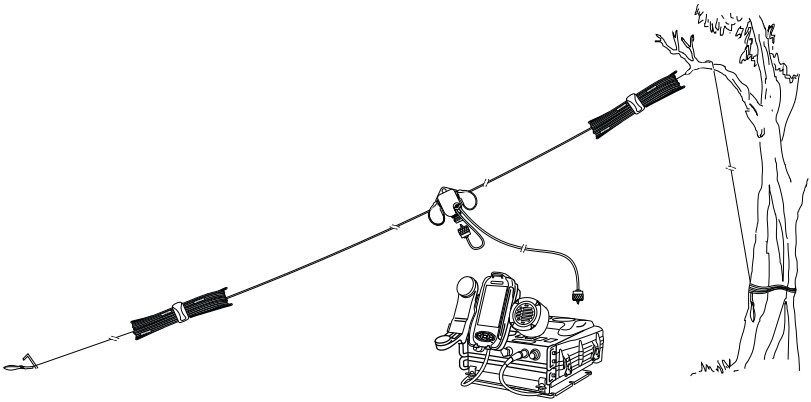

Single Ended

For rapid deployment, with reduced but still acceptable efficiency, the antenna can be operated single ended. In this configuration, one side of the antenna (labelled “antenna”) is unwound to the desired frequency and tied to an elevated structure. The central balun should be located close to the ground, and the remaining side of the antenna (“earth”) partly unwound (5 to 10m) and stretched out on the ground below the radiating element.

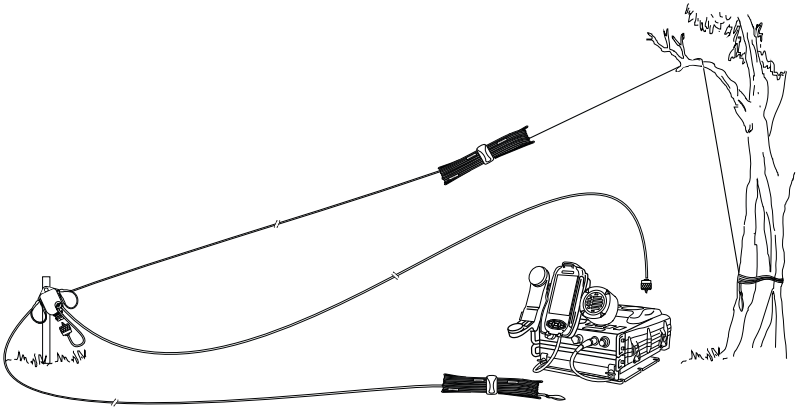

Marine Installations

The Barrett 4045 automatic antenna tuner is designed for use in land base station and maritime HF services. Primarily designed for operation with end-fed unbalanced antennas such as whips and long wires, the tuner is built in a waterproof impact resistant, moulded ABS plastic enclosure.

Antenna Selection

The 4045 automatic antenna tuner will operate into almost any end-fed antenna with a length exceeding 2.5 metres, providing an effective ground (earth) is used. The antenna efficiency will be proportional to the length of the antenna and will be maximum when the length of the antenna approaches ¼ wavelength. It is advisable to limit the wire antenna to ¼ or ¾ wavelength at the highest frequency to be used.

Antenna

On sailing vessels the antenna can either be an insulated backstay or a whip antenna mounted vertically, usually on the stern. Best performance will be achieved by using an insulated backstay as the radiating length will be longer than that available when using a whip. The top insulator on the backstay should be approximately 300 mm from the mast and the bottom insulator should be at eye level above the deck. The distance between insulators should be greater than 10 metres and less than 35 metres. A whip antenna is generally used on small to medium sized power vessels. There are different length whips to suit the vessel length.

Transceiver and Tuner Mounting

Select a suitable position in the vessel to mount the transceiver. It should be a position that is out of the weather and easily accessible to the operator, whilst as close as practical to the 13.8 V DC power source. Mount the transceiver to a solid fixing point using the mounting cradle. Make sure there is sufficient space at the rear of the transceiver to connect the power and antenna cables.

The antenna tuner should be mounted as close to the antenna feed point as possible. In metal vessels the length of the feeder from the antenna tuner to the feed-through insulator, inside the vessel, should be kept less than 1 metre.

The antenna feed cable should be a suitable high voltage cable. Care should be taken to avoid sharp points when terminating the cable to prevent corona discharges.

The interconnect cable supplied with the antenna tuner should be routed away from other cables back to the transceiver and connected as indicated in the diagram on page 185.

Ground (Earth) System

The ground (earth) system is a key part of the overall antenna system and consequently the system operation. An inadequate ground (earth) system is the primary cause of poor performance and tuning problems. There is little point in installing the antenna unless a good ground (earth) system or counterpoise can be provided.

Metal hulled vessels provide an almost perfect ground (earth). The tuner ground (earth) terminal should be connected directly to the hull using the shortest possible ground (earth) strap. The point of connection to the hull should be prepared so that it is free of paint and rust to ensure a good contact area with minimum electrical resistance.

Wooden or fibreglass vessels present more of a problem to ground (counterpoise). Ideally the vessel should be fitted with an external copper ground (earth) sheet, connected to the interior of the vessel by suitable stud or an ground (earth) plate (“E” plate Barrett P/N BCA91700)

Should neither of these methods be available it will be necessary to bond as many large metallic objects, such as the engine and propeller shaft, together to form a ground (earth).

Whichever method is used the ground (earth) run from the ground (earth) plate to the antenna tuner should be as short as possible and use copper strap at least 50 mm wide (wider if available). Consideration must always be given to the problem of electrolysis. Severe structural damage may occur if electrolysis is present. Consult your maritime experts for more information concerning electrolysis.

Corrosion

All connections in marine situations are subject to corrosion and oxidation. To minimise this all joints should be cleaned and have silicon grease applied before assembly. Under severe conditions joints should be protected with self vulcanising rubber tape.

Electrical Checkout

After mechanical installation is complete, select the highest frequency to be used on the transceiver. A directional watt-meter may be inserted in the coaxial transmission line between the transceiver and the tuner, if desired, although the internal tuner of the PRC-4090 transceiver is accurate. The tune mode on the transceiver is then activated (see page 107). Upon application of RF energy, the tuner should start to tune, indicated by the ‘clattering’ of the tuner relays. After a few seconds the relay noise will cease. The transceiver should indicate “Tune OK” and the watt-meter reflected power should indicate a low value consistent with a VSWR of better than 2:1. Select the lowest desired frequency on

the transceiver and repeat the above procedure. The result should be the same, except that the tune cycle may take longer. If the above procedure does not give the results as indicated, check that the antenna length and connections are correct and re-check all ground (earth) connections.

Note: When received, the Barrett 911 automatic antenna tuner memory system will usually not have any pre-stored tuning information appropriate to your installation. To allow the 911 to 'learn' its tuning information simply proceed from one channel to the next allowing the normal tune cycle to take place. Each successful tune is 'memorised' so that when that channel is re-selected, the tuner will almost instantaneously retune to that frequency.

Connection Details For a PRC-4090 Transceiver and 4045 Automatic Antenna Tuner in a Marine Installation

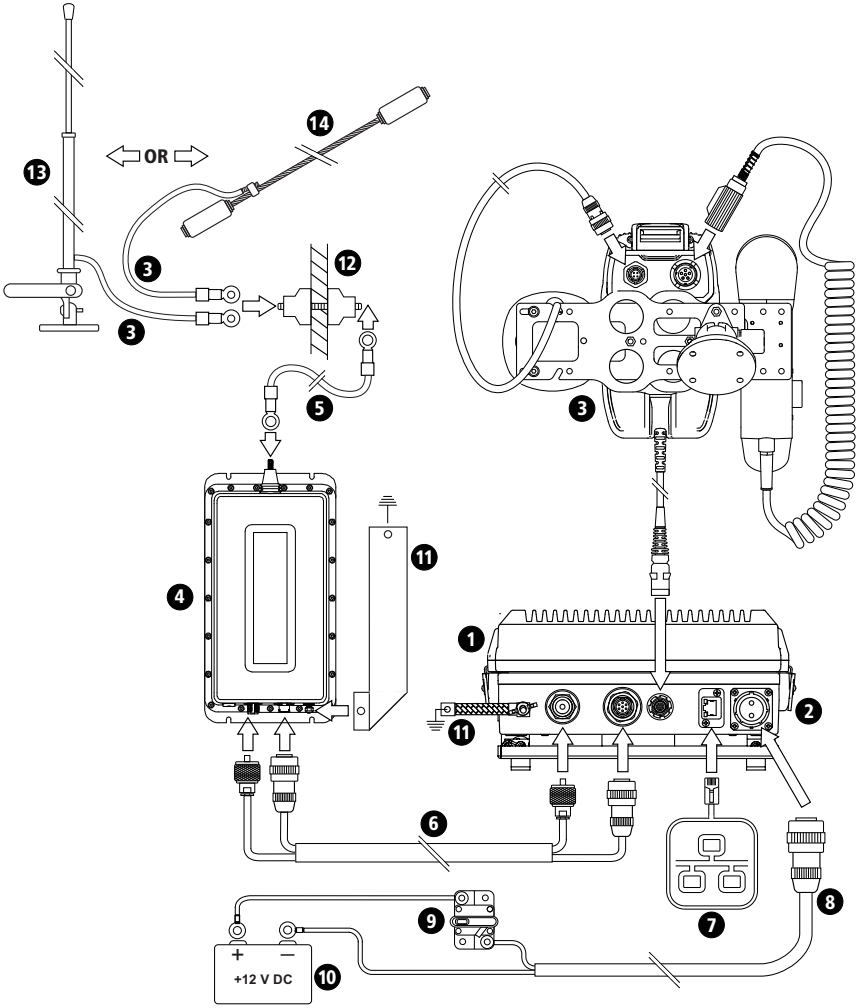

1	Barrett PRC-4090 HF SDR Transceiver (P/N 4090-00-01)
2	Barrett PRC-4090 System Docking Station (P/N 4090-05-00) and Anti-Vibration Mount (P/N 4090-05-07)
3	PRC-4090 Control Handset (P/N 4090-01-09) and Control Handset Docking Station (P/N 4090-05-03)
4	Barrett 4045 Automatic Antenna Tuner (P/N BC404500)
5	Antenna Feeder Cable
6	Coaxial / Control Cable Extension (P/N 2019-00-06)
7	IP Network Connection via RJ45 cable
8	6 metre power cable supplied with transceiver (P/N 4019-00-02)
9	Circuit Breaker
10	12 V (or 24 V) DC Battery
11	Ground (earth)
12	Feed-through Insulator (P/N BCA91701)
13	Marine Whip Antenna
14	Back stay antenna or longwire antenna

APPENDICES 8

This chapter contains the following sections:

- Appendix 1- Specifications
- Appendix 2 - Connectors
- Appendix 3 - Overview of HF Operation
- Appendix 4 - BITE Test

Appendix 1 - Specifications

General

Transmit frequency range	1.5 MHz to 30 MHz (reduced performance below 1.6MHz)
Receive frequency range	250 kHz to 30 MHz
Frequency stability	±10Hz ±0.1PPM over temperature range of -30°C to +70°C (±0.5PPM if ESU not ready)
Frequency resolution	10Hz: Program Mode 1Hz: Tunable Receiver
Operating modes	J3E (USB, LSB) - H3E (AM) - J2A (CW) - CF (Custom Filter) - ISB (data option)
Filter bandwidth	Fully software defined standard and custom filter range from 300Hz to 3000Hz (6kHz ISB option)
Operating temperature	-30°C to +70°C relative humidity 95% , non-condensing
Frequency hopping	Barrett HF Frequency Hopping algorithms - 25 or 5 hops per second with External Synchronisation Unit (ESU) supplied when the option is fitted. Improved internal clock to maintain clock synch without GPS signal for extended periods in the field (Minimum 48 hrs w/o GPS Signal)
Selcall system	Based on CCIR 493-4, four and six digit systems. Simple mode for a single radio ID. Expanded mode to allow for multiple Selcall IDs. Option: ICAO Annex 10 Selcall Encode (ARINC).
ALE Standards (options)	MIL-STD-188-141B (2G) JITC Certified, FED STD 1045 MIL-STD-188-141B Appendix C (3G), STANAG 4538

Digital Voice Encryption	Enhanced Digital Voice and Secure Digital Voice options with choice of autobauding “Low Rate” vocoder option (TWELP/MELP Non-proprietary - customisation available) providing superior voice recovery on poor channels down to -3dB. - AES 256 Digital Encryption with 600/1200/2400bps Vocoder - DES 56 Digital Encryption with 700/1200/2400bps Vocoder
Security	Zeroise, Over Air Transceiver Lock, Transceiver Kill
User Interface	Ruggedised touch screen and keypad (VFO control in RX/TX Scroll).
LCD Display	4.3 inch 800 x 480 pixel display with capacitive touch-screen
Current consumption	350 mA standby (muted)
Channel capacity	1000 programmable channels
Contact Capacity	500 contacts
Scan Tables	10 scan tables
Noise Reduction (DSP)	3 level settings
Nominal Voltage	+13.8VDC, Negative Ground
Operating Voltage Range	+11 V to +28 V DC operation
Over Voltage Protection	Up to 35V
Reverse Voltage Protection	Built in
Weight	3.10 kg (transceiver only)
Width	241 mm (transceiver only)
Depth	331 mm (transceiver only)
Height	53 mm (transceiver only)

Receiver

Sensitivity (250kHz - 30MHz)	-126dBm (0.112μV) for 10dB SINAD – J3E Mode (Specification typical across frequency band, reduced sensitivity between 250kHz and 500kHz)
Selectivity J3E	-1kHz and +4kHz: Better than 70dB -2kHz and +5kHz: Better than 70dB -5kHz and +8kHz: Better than 75dB
Selectivity J2B (option)	-500Hz and +500Hz: Better than 60dB
Blocking	Max usable sensitivity -20kHz and +20kHz: better than 95dB
Intermodulation Distortion	Better than 110 dBμV
Spurious response ratio	Better than 95 dB
Reciprocal mixing	Better than 110 dBμV (As defined in ITU-R F.612)
In-band IMD	Better than 40 dB
Audio output	4 W into 4 ohm at less than 2% distortion
Audio response	-6dB for 300Hz to 2700 Hz (adjustable bandwidth)
Handset Audio - Output Max	6.5 mW into a 1 k ohm load ±1.5 dB, with a 1 kHz tone.

Transmitter

Power Output	SDS configuration: 150W, 125W, 30W, 10W PEP ± 1.5dB (2 tone or voice) Manpack configuration: 30W, 10W PEP ± 1.5dB (2 tone or voice)
Duty cycle	100% 2 tone input with fan option (-30°C to +50°C relative humidity 95%, non-condensing)
Protection	Safe under all load conditions, thermal protection against excessive power transistor temperatures

Intermodulation Products	Better than 32dB below PEP (26dB below two-tone peak)
Current Draw Transmit 13.8VDC	10W: 4.5A (1 tone), 3.5A (2 tone) 30W: 8.5A (1 tone), 6A (2 tone) 125W: 23.5 (1 tone), 20.5A (2 tone) 150W: 24.5 (1 tone), 20.5A (2 tone)
Current Draw Transmit 15VDC	10W: 4.0A (1 tone), 3.5A (2 tone) 30W: 7.5A (1 tone), 5.5A (2 tone) 125W: 23.5A (1 tone), 18.5A (2 tone) 150W: 23.5A (1 tone), 17.5A (2 tone)
Current Draw Transmit 24VDC	10W: 3.5A (1 tone), 3.0A (2 tone) 30W: 5.5A (1 tone), 3.5A (2 tone) 125W: 15.5A (1 tone), 11.5A (2 tone) 150W: 15.5A (1 tone), 11.5A (2 tone)

Specifications are typical. Equipment descriptions and specifications are subject to change without notice or obligation.

Appendix 2 - Connectors

Transceiver

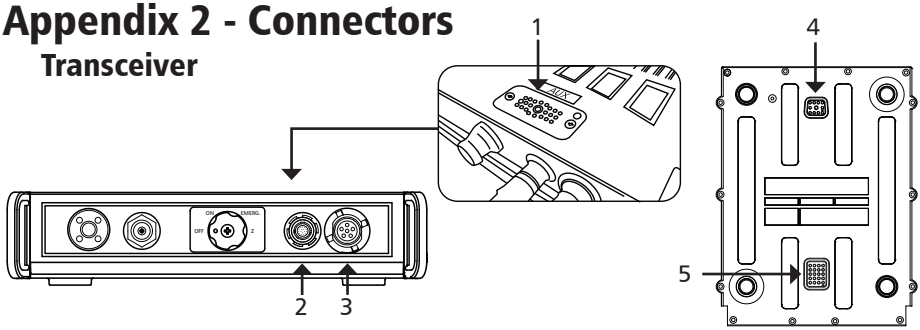

1. Auxiliary Connector

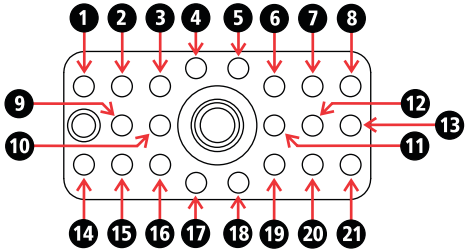

PIN	Signal
1	CW Key
2	1 Pulse per Second
3	GPS data NMEA format
4	+5V Out
5	13V8 Out
6	Scan Stop
7	Balanced Audio Out Positive
8	Balanced Audio Out Negative
9	PTT Out
10	Ground
11	Auxiliary Power Enable
12	Auxiliary Line In Positive
13	Auxiliary Line In Negative
14	Auxiliary Digital Out 1
15	Auxiliary Digital Out 2

PIN	Signal
16	Mute State
17	USB Data Positive
18	USB Data Negative
19	+5 USB
20	Auxiliary PTT
21	Auxiliary Digital In

2. Control Handset Connector

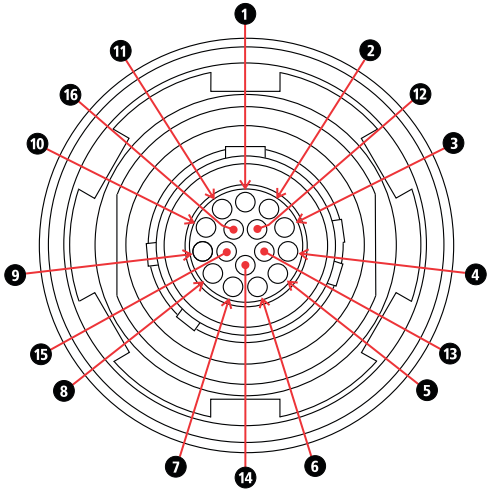

PIN	Signal
1	Ground
2	Handset Voltage
3	CAN Bus positive
4	CAN Bus Negative
5	Handset Audio Positive
6	Handset Audio Negative
7	Ethernet TX Data positive
8	Ethernet TX Data negative
9	Ethernet RX Data positive

PIN	Signal
10	Ethernet RX Data negative
11	Handset GPS 1 Pulse per Second
12	Reserved
13	Reserved
14	Reserved
15	Reserved
16	Reserved

3. H-250 Handset Connector

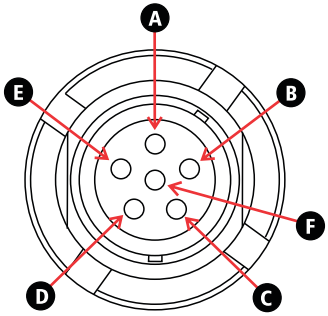

PIN	Signal
A	H250 Handset Ground
B	H250 Speaker output
C	H250 PTT
D	H250 Microphone
E	Reserved
F	Reserved

4. Power Connector

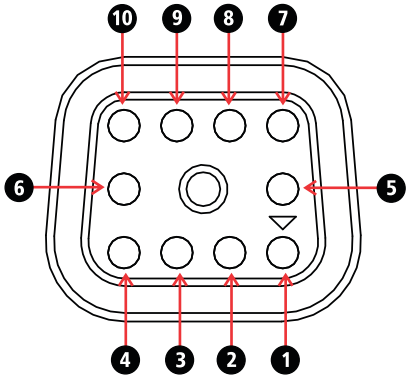

PIN	Signal
1	Input Voltage
2	Input Voltage
3	Input Voltage
4	RS232 Transmit
5	Input Voltage
6	RS232 Receive
7	Ground
8	Ground
9	Ground
10	Ground

5. SDS Connector

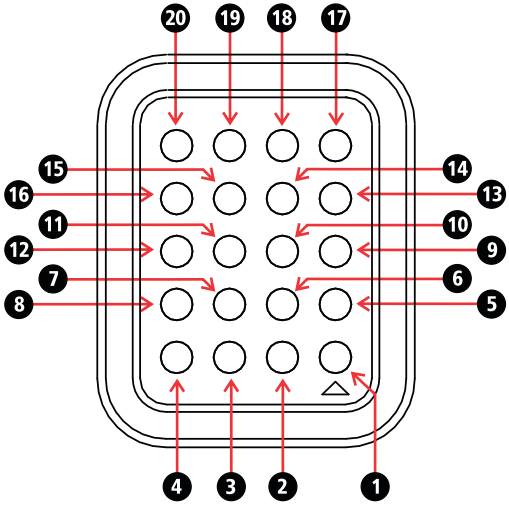

PIN	Signal
1	Handset Voltage
2	Handset GPS 1 Pulse per Second
3	CAN Bus positive
4	CAN Bus Negative
5	External GPS 1 Pulse per Second
6	Reserved
7	Handset Audio Negative
8	Handset Audio Positive
9	Ground
10	Ground
11	SDS Voltage Enable
12	SDS Voltage Enable
13	External ATU Voltage
14	External ATU Scan signal
15	External ATU Tuned signal
16	SDS Detect

PIN	Signal
17	Ethernet TX Data positive
18	Ethernet TX Data negative
19	Ethernet RX Data positive
20	Ethernet RX Data negative

Battery Pack

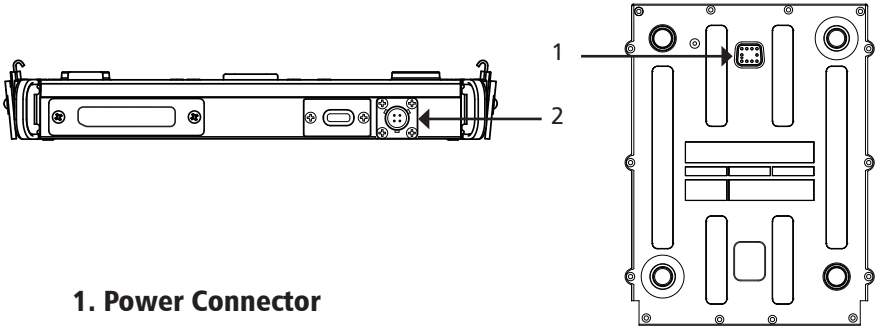

1. Power Connector

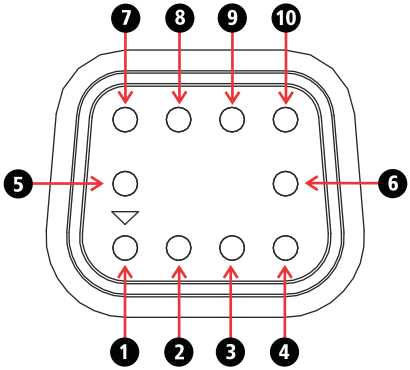

PIN	Signal
1	Input Voltage
2	Input Voltage
3	Input Voltage
4	Battery communication Transmit
5	Input Voltage
6	Battery communication Clock
7	Ground
8	Ground
9	Ground
10	Ground

2. DC In

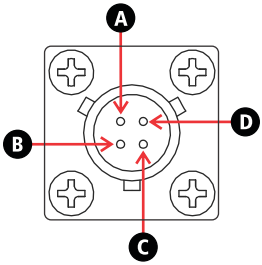

PIN	Description
A	DC Positive
B	DC Positive
C	DC Negative
D	DC Negative

System Docking Station (SDS)

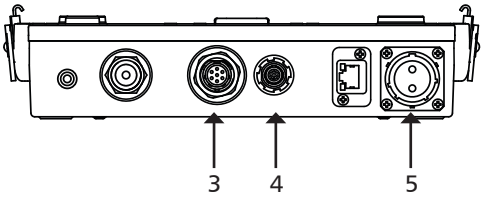

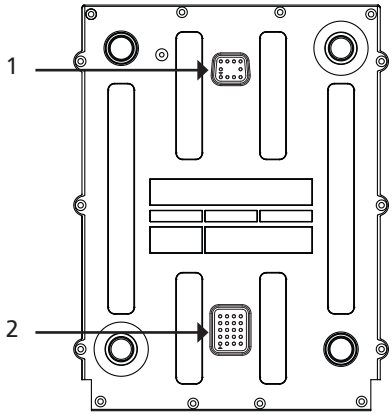

1. Power Connector

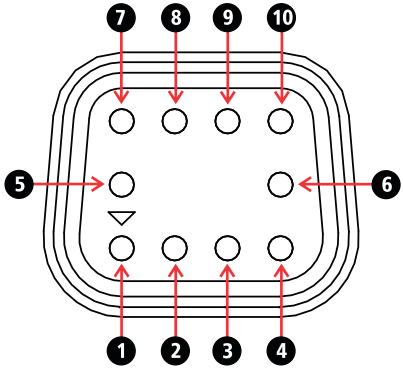

PIN	Signal
1	Input Voltage
2	Input Voltage
3	Input Voltage
4	RS232 Transmit
5	Input Voltage
6	RS232 Receive
7	Ground
8	Ground
9	Ground
10	Ground

2. SDS Connector

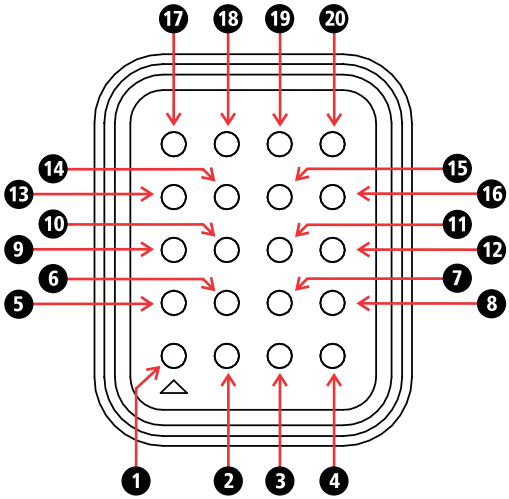

PIN	Signal
1	Handset Voltage
2	Handset GPS 1 Pulse per Second
3	CAN Bus positive
4	CAN Bus Negative
5	External GPS 1 Pulse per Second
6	Reserved
7	Handset Audio Negative
8	Handset Audio Positive
9	Ground
10	Ground
11	SDS Voltage Enable
12	SDS Voltage Enable
13	External ATU Voltage
14	External ATU Scan signal
15	External ATU Tuned signal
16	SDS Detect

PIN	Signal
17	Ethernet TX Data positive
18	Ethernet TX Data negative
19	Ethernet RX Data positive
20	Ethernet RX Data negative

3. ATU Connector

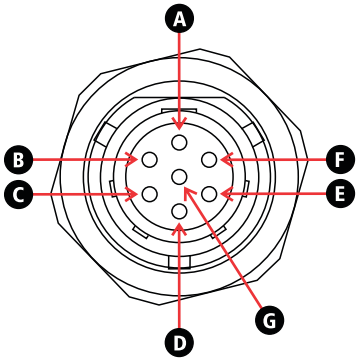

PIN	Signal
A	Ground
B	Receive Data line
C	1 pulse per second
D	ATU Scan Line
E	ATU Tuned signal
F	ATU Voltage 13V8
G	Transmit data line

4. Control Handset Connector

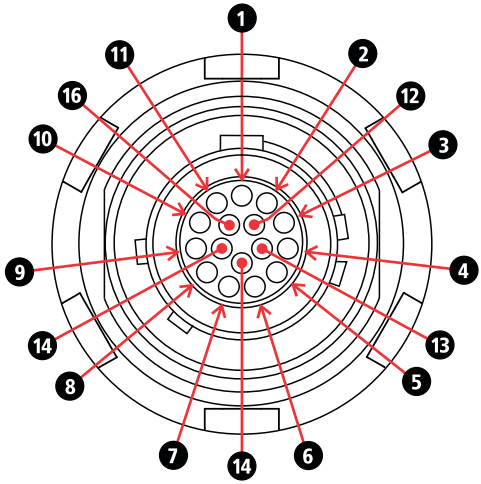

PIN	Signal
1	Ground
2	Handset Voltage
3	CAN Bus positive
4	CAN Bus Negative
5	Handset Audio Positive
6	Handset Audio Negative
7	Ethernet TX Data positive
8	Ethernet TX Data negative
9	Ethernet RX Data positive
10	Ethernet RX Data negative
11	Handset GPS 1 Pulse per Second
12	Reserved
13	Reserved
14	Reserved
15	Reserved
16	Reserved

5. DC Input Connector

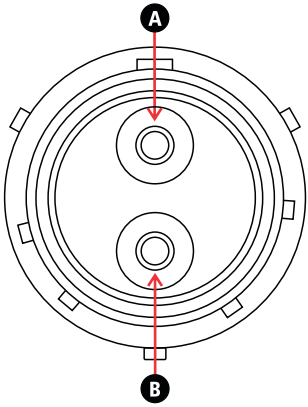

PIN	Signal
A	Input Voltage (+11 V to +28 V DC)
B	Ground

Control Handset

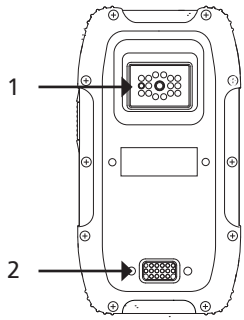

1. Handset Auxiliary Connector

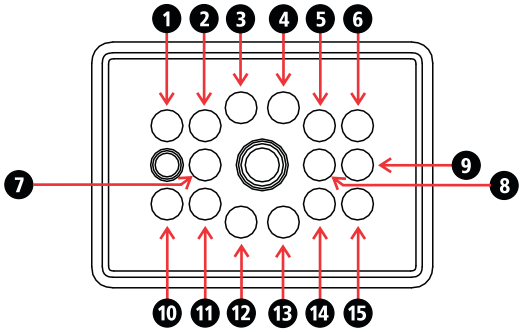

PIN	Signal
1	Reserved
2	Reserved
3	USB Data Positive
4	USB Data Negative
5	+5 USB
6	Reserved
7	Ground
8	Ground
9	Handset Dock detection
10	Speaker Out Negative

PIN	Signal
11	Speaker Out Positive
12	Dock Speaker Detection
13	H250 Microphone Input
14	H250 PTT
15	H250 Speaker output

2. Control Handset Cable Connector

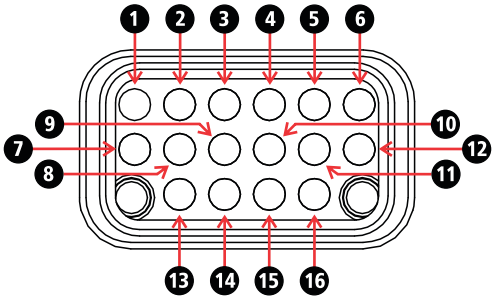

PIN	Signal
1	Handset Voltage
2	CAN Bus positive
3	4050 Detect voltage
4	Handset GPS 1 Pulse per Second
5	Handset Audio Positive
6	Ground
7	CAN Bus Negative
8	Speaker Out Negative
9	Reserved
10	Reserved
11	Speaker Out Negative
12	Handset Audio Negative
13	Ethernet TX Data positive

PIN	Signal
14	Ethernet TX Data negative
15	Ethernet RX Data positive
16	Ethernet RX Data negative

Handset Docking Station

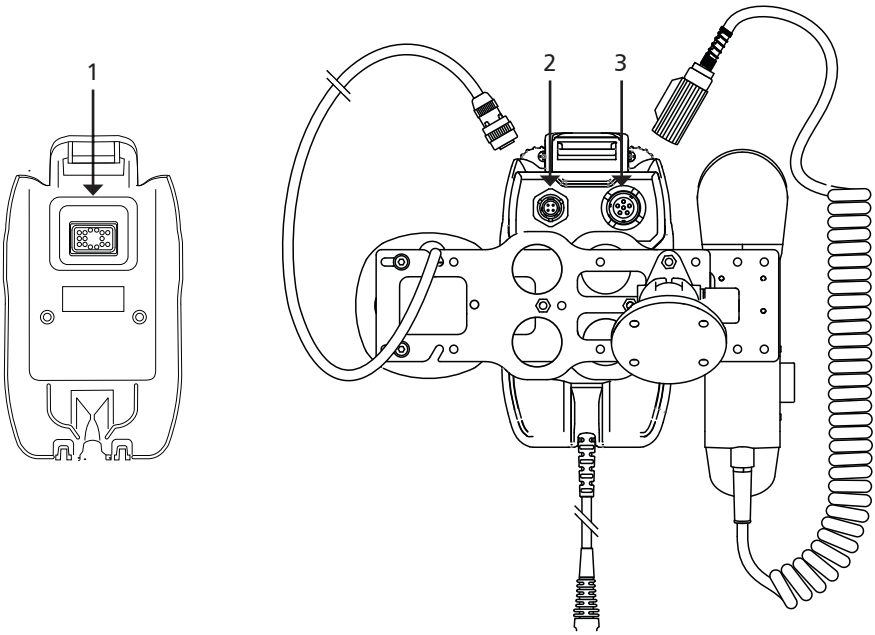

1. Cradle Auxiliary Connector

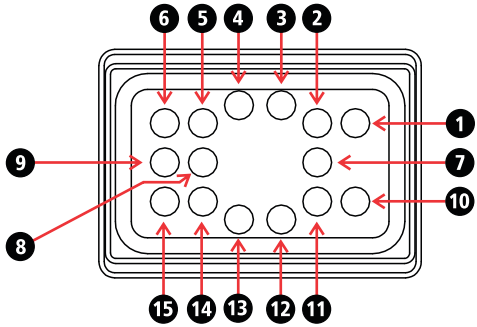

PIN	Signal
1	Reserved
2	Reserved
3	USB Data Positive
4	USB Data Negative
5	+5 USB
6	Reserved
7	Ground
8	Ground
9	Handset Dock detection
10	Speaker Out Negative
11	Speaker Out Positive
12	Dock Speaker Detection
13	H250 Microphone Input
14	H250 PTT
15	H250 Speaker output

2. External Speaker Connector

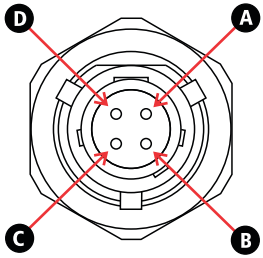

PIN	Signal
A	Dock Speaker Detection
B	Speaker Out Positive
C	Speaker Out Negative
D	Ground

3. H-250 Handset Connector

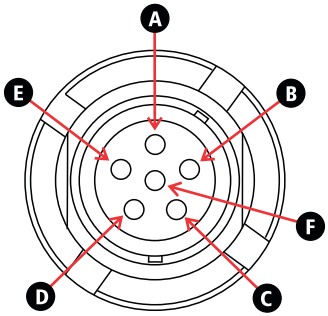

PIN	Signal
A	H250 Handset Ground
B	H250 Speaker output
C	H250 PTT
D	H250 Microphone
E	Reserved
F	Reserved

Appendix 3 - Overview of HF Operation

HF (High Frequency) is the radio spectrum with frequencies between 1.5 and 30 MHz. Within this radio spectrum an efficient form of transmitter modulation, SSB (Single Side Band), is used. This, combined with the use of the ionosphere - a layer of ionisation gases that resides between 100 and 700 km above the Earth's surface, provides efficient, cost effective communications over short, medium and long distances - without the need for expensive re-transmission devices, such as the VHF or UHF repeaters or satellites, all of which have ongoing operational costs and a reliance on a physical infrastructure.

In many remote areas, HF / SSB is the only form of communication possible.

HF Propagation

When HF / SSB radio waves are generated by the transceiver there are usually two components:

- The ground-wave, which travels directly from the transmitting antenna to the receiving antenna following the contours of the Earth.
- The sky-wave, which travels upward and at an angle from the antenna, until it reaches the ionosphere (an ionised layer high above the Earth's surface), and is then refracted back down to Earth, to the receiving antenna.

Generally speaking, ground-wave is used to communicate over shorter distances usually less than 50 km. Because ground-wave follows the contours of the earth, it is affected by the type of terrain it passes over. Ground wave is rapidly reduced in level when it passes over heavily forested areas or mountainous terrain.

Sky-wave is used to communicate reliably over medium to long distances up to 3,000 km. Whilst the nature of sky-wave propagation means it is not affected by the type of terrain as in ground-waves, it is affected by factors involving the ionosphere as described below.

Radio Wave Propagation

The following illustrations show the characteristics of ground-wave and sky-wave propagation during day and night time. In each illustration the height of the ionosphere above the ground is shown.

In both illustrations Station A communicates with Stations B, C and D. Propagation from Station A to B is by ground-wave. The diagrams illustrate that the ground-wave is not affected by the time of day and the height of the ionosphere above the ground.

Propagation from Station A to C and D, is by sky-wave and as the diagrams illustrate, the sky-wave is significantly affected by the time of day and the height of the ionosphere above the ground.

Under each diagram there are recommended working frequencies listed. Please note that these will vary according to time of year and other factors. They are intended only as a guide and are subject to change.

Day

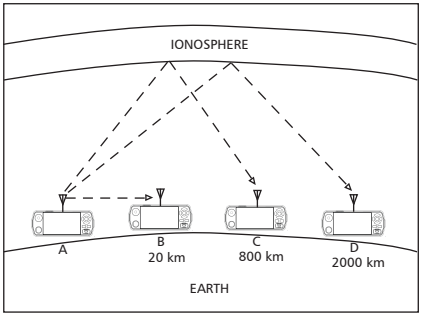

The sun is higher
The ionosphere is higher
The best frequency to use is higher.

A to B - Possible optimum working frequency is 3 MHz

A to C - Possible optimum working frequency is between 7 - 9 MHz

A to D - Possible optimum working frequency is between 13 - 16 MHz

Night

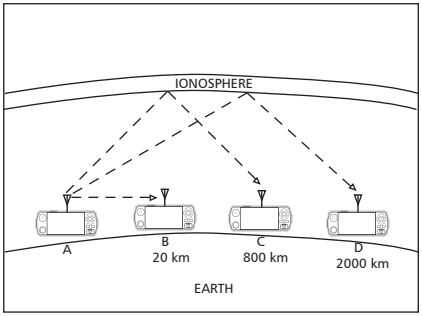

The sun is lower
The ionosphere is lower
The best frequency to use is lower.

A to B - Possible optimum working frequency is 3 MHz

A to C - Possible optimum working frequency is between 5 - 7 MHz

A to D - Possible optimum working frequency is between 9 - 12 MHz

Factors Which Affect HF/SSB Communications

There are a number of different factors which will affect the success of communications via HF/SSB radio. These are outlined below:

Frequency Selection

Frequency selection is perhaps the most important factor that will determine the success of your HF/SSB communications.

Generally speaking the greater the distance over which you want to communicate, the higher the frequency you should use.

Beacon Call, a Selcall (Selective Call) function built into the Barrett PRC-4090 Transceiver, makes finding the correct frequency to use easy. A Beacon Call is based on the network of transceivers all having a selection of frequencies that will accommodate most ionospheric conditions. When in standby, the network transceivers scan these frequencies waiting for a call (Selcall or Beacon Call) from another transceiver. The transceiver wishing to check for the best frequency to operate on sends a Beacon Call to the station to be contacted. If the call to the other station is successful, a revertive tone from the station being called will be heard, indicating the channel selected was suitable for the ionospheric conditions prevailing. If the revertive tone is not heard or is very weak, another channel may be tried until a revertive tone of satisfactory signal strength is heard.

(Refer to Beacon Calls on page 38 for more details.)

Time of Day

As a rule, the higher the sun, the higher the frequency that should be used. This means that you will generally use a low frequency to communicate early morning, late afternoon and evening, but you will use a higher frequency to cover the same distance during times when the sun is high in the sky (for example, midday). You will need to observe the above rule carefully if your transceiver has a limited number of frequencies programmed into it, as you may only be able to communicate effectively at certain times of the day.

Weather Conditions

Certain weather conditions will also affect HF/SSB communications. Stormy conditions will increase the background noise as a result of static caused by lightning. This background noise could rise to a level that will blank out the signals you are trying to receive.

Man-made Electrical Interference

Interference of an electrical nature can be caused by overhanging power lines, high power generators, air-conditioners, thermostats, refrigerators and vehicle engines, when in close proximity to your antenna. The result of such interference may cause a continuous or intermittent increase in the level of background noise.

System Configuration and Installation

The method in which your system is configured and installed will also affect the success of your HF/SSB communications. Your choice of antenna system and power supply is critical. Correct installation is also extremely important. An HF/SSB transceiver is generally installed using different rules to those used to install VHF or UHF transceivers. Failure to correctly install an HF/SSB system will greatly affect the communications quality you will obtain.

Your local Barrett representative will be able to assist with your system configuration and/or installation.

HF Communications Compared with VHF or UHF Short Distance Communications

Communications on any HF/SSB transceiver will sound different to that on a VHF (Very High Frequency) radio or UHF (Ultra High Frequency) radio or telephone. This is because of the nature of HF propagation and the modulation methods used. On HF/SSB transceivers there will always be background noise evident behind the signal you are receiving and this will increase when there is electrical interference or thunderstorm activity in the area.

Appendix 4 - BITE Test

It is recommended that any accessories (ATU, linear amplifier, Dual Antenna Switch Unit, secondary control head, GPS etc.), auxiliary port connections and the antenna be disconnected from the SDS or manpack to get consistent BITE test results. Additionally do not touch the control head and the microphone buttons while the tests are running.

Each test is outlined below as are possible causes for a failed result. If the fault is interfering with the everyday operation of the system, please contact your local Barrett dealer or Support at www.barrettcommunications.com.au.

Tests

Real Time Clock

This test checks if the real time clock on the microboard responds to commands. A failed test indicates an issue with the I2C bus on the **microboard** or a defective real time clock.

Pre Amplifier I/O

This test checks if the pre amplifier board is accessible by checking if the port expander responds to commands. A failed test indicates an issue with the I2C bus on the **microboard**, the **pre amplifier board** or a **loose connector** between the two transceiver halves.

Interface I/O

This test checks if the internal interface boards are accessible. A failed test indicates an issue with the I2C bus on the **microboard**, one of the **interface boards** or a **loose connector** between the two boards.

Local Oscillator

This test checks if the oscillator on the microboard is accessible. A failed test indicates an issue with the SPI bus on the **microboard** or a defective oscillator.

Audio Codec

This test checks if the audio codec on the microboard is accessible. A failed test indicates an issue with the I2C bus on the **microboard**, a failed DSB bootup, an ISP bus issue to the DSP or a defective audio codec.

Analog to Digital Converter

This test checks if the A/D converter for measuring the final stage voltage is accessible. A failed test indicates an issue with the I2C bus on the **microboard**, the **pre amplifier board**, a **loose connector** between the two transceiver halves or a defective A/D converter.

Temperature Sensor

This test checks if the temperature sensor for measuring the final stage temperature is accessible. A failed test indicates an issue with the I2C bus on the **microboard**, the **pre amplifier board**, a **loose connector** between the two transceiver halves or a defective temperature sensor.

Digital to Analog Converter

This test checks if the D/A converter for controlling the boost converter is accessible. A failed test indicates an issue with the I2C bus on the **microboard**, the **pre amplifier board**, a **loose connector** between the two transceiver halves or a defective D/A converter.

Rx Current

This test checks if the overall current draw while in receive mode (idle) is below 1A. This test can fail if too many accessories (Dual Antenna Switch Unit, ATU, linear amplifier etc) are connected to the SDR or if the accessories are faulty. Disconnect all accessories and rerun the tests. If the test is failed again, there is an issue with the **pre amplifier board**.

Tx Current

This test checks if the overall current draw while in transmit mode (BIAS current added) is between 1A and 4A. A failed test indicates the same issues as with the “Rx Current” test. Additionally, there may be an issue with the final stage on the **pre amplifier board**.

Final Voltage

This test checks if the voltage of the final stage is between 28V and 32V. A failed test indicates a defective **pre amplifier board** (port expander fails to configure the pre amplifier board, the D/A converter fails to set voltage, the boost converter fails or the A/D converter fails to read the voltage).

EEPROM

This test checks if the EEPROM allows read/write access. A failed test indicates a faulty EEPROM on the **microboard**.

Rx Test

This test checks the receiver chain with a synthetic signal. A failed test indicates a defect on the **microboard** (e.g. synthesizer, digital IF, etc).

Automatic Gain Controller

This test cycles through the attenuators and checks if the AGC adjusts itself accordingly. A failed test indicates a defect on the **microboard** (e.g. attenuators).

Warranty Statement

Barrett Communications (hereafter referred to as 'Seller') provides a three (3) year warranty on all Barrett products from the date of shipment from the Seller. A one (1) year warranty from the date of shipment from the Seller is provided for all batteries.

Each warranty guarantees acceptable performance of the product under normal recommended conditions for the duration of the warranty period. In cases of accident, abuse, incorrect installation or maintenance by a non-Seller representative, subjection to abnormal environmental conditions, negligence or use other than those in accordance with instructions issued by the Seller, the warranty shall be voided. In addition, this warranty shall not cover low performance – specifically the distance or quality of transmission and reception - due to unfavourable environmental or locational conditions. Nor shall this warranty cover the quality of transmission and reception of transceivers mounted in vehicles or vessels that have not been sufficiently electrically suppressed.

Should any fault due to bad design, workmanship or materials be proven at any time within the warranty period, the Seller will rectify such fault free of charge provided that the equipment is returned, freight paid, to Barrett Communications Pty Ltd head office or to an authorised service centre. The repaired or replaced product will remain covered under and throughout the term of the original warranty period up to its expiration. No repair or replacement will extend the warranty term past the original thirty-six (36) month anniversary of the original date of shipment from the Seller.

Firmware and software (pre-installed, stand-alone or provided as an update), hereafter referred to as 'Software', is guaranteed to perform acceptably within the specifications provided by the Seller, provided that the Software is within the warranty period.

Should Software not perform acceptably, the Seller will use all commercially reasonable efforts to correct such nonconformity as reported to the Seller directly or via a support representative. The Seller is not obliged to update Software under warranty if the nonconformity is caused by a) the use or operation of the Software in an environment other than intended or recommended by the Seller in relevant documentation, or b) modifications made to the Software not authorised or undertaken by the Seller or a representative of said Seller.

Subject to the matters set out in this warranty, no liability, expressed or implied is accepted for any consequential loss, damage or injury arising as a result of a fault in the equipment and, all expressed or implied warranties as to quality or fitness for any purpose are hereby excluded.

This warranty does not extend to products supplied by the Seller which are not designed or manufactured by it. The Seller will however make every endeavour to ensure that the purchaser receives full benefit on any warranty given by the original equipment manufacturer.

This warranty is restricted to the original purchaser except where the original purchaser is a reseller authorised by the Seller who has purchased for the purpose of resale, warranty shall be extended to the reseller's customer.

Contact Details

Our customer / dealer technical support department can be contacted via land mail, email, telephone or via support ticket on the technical support web page.

https://www.barrettcommunications.com.au/support/

Barrett Communications Pty Ltd Head Office:

PO Box 1214, Bibra Lake WA 6965 AUSTRALIA

Toll Free Tel: 1800 999 580 (Within Australia)
Tel: +618 9434 1700
Fax: +618 9418 6757
email: support@barrettcommunications.com.au

Telephone support from the Australian office is available from 7:30 am to 4:00 pm local time Monday to Friday.

Barrett Communications – Europe:

Unit 9, Fulcrum 2 Victory Park, Solent Way,
Whiteley Hampshire PO15 7FN United Kingdom

Tel: +44 (0) 1489 880 332
Fax: +44 (0) 1489 565 422
email: support@barrettcommunications.co.uk

Telephone support from the UK office is available from 8:30 am to 5:00 pm local time Monday to Friday.

Barrett Communications Corporation USA:

190 Office Park Way
Pittsford, N.Y. 14534

Tel: +1 585 582 6134
email: support@barrettusa.com

Telephone support from the USA support office is available from 8:30 am to 5:00 pm local time Monday to Friday.

Index

A

Advanced Call History 43

All call 79

Antenna

911 Automatic Antenna Tuner

Connection Details (Marine) 184

912 Multi wire Broadband Dipoles 163

2019 Automatic Tuning Mobile Antenna 142

Assembly 148

Connection Details (Mobile Pack) 142

Mounting 144

4011 Automatic Antenna Tuner for Base Station 168

Connection Details 171

4017 Automatic Tuning Horizontal Dipole 165

Connection Details 166

Noise Suppression 140

ARINC 4, 32, 35, 75, 76

Audio 59, 63, 75, 77, 78, 96, 189

Mute 88

B

Base Station 24, 86, 109, 155, 168, 171

Beacon Call 30, 32, 38, 39, 48, 49, 51, 52, 54, 96, 211

C

Call History 4, 37, 40, 42, 43

Call History Menu 43

CCIR 4, 30, 31, 32, 56

Channel labels 68

Collective Call 75, 79

Configuration 73, 74, 77, 171, 212

Contacts 29, 34, 36, 37, 38, 39, 41, 48, 49, 51, 52, 54

D

Digital Voice 75, 78, 80, 103, 158

Display 4, 19, 59, 64

Dual Port Antenna Switch Unit 85

E

Earth 169, 182, 209

Emergency Call 17, 27, 28, 32

Export 73, 80, 81, 82

F

Frequency Hopping 4, 75, 82

G

General Configurations screen 60, 62

GPS Position 51

GPS Push 83

GPS Request 49

Ground 78, 143, 147, 154, 167, 169, 172, 182, 185, 209

Group call 79

H

Hangup 41, 54, 55

Hopping 4, 75, 82, 102

I

Import 74

INT 4, 30, 31, 33, 48, 56

I/O 75, 83, 84

L

Label 19, 68, 69

M

Marine Installations 181

Mobile Installations 109, 112, 132

Mode 69, 103

Mounting 138, 140, 144, 148, 150, 151, 152, 168, 181

Mute 75, 78, 88, 89

  Audio 88

  Syllabic Sensitivity 88

N

Network 4, 56, 57, 69, 75, 90

Noise Reduction 75, 93

Noise Suppression 140, 141

O

OEM 4, 30, 31, 32, 33, 48, 56, 102

P

Pagecall 30, 48

Receive 48

Programming 27, 65, 66, 73, 79

R

RF 5, 75, 94, 95, 144, 161, 168, 170, 182

RFDS 5, 27, 28, 30, 56

RS232 84, 85

S

Scan 5, 72, 96, 97, 98, 99

Scan Table 5, 97, 98, 99

Secure Call 32, 53, 54, 103

Secure Digital Voice 80, 103

Security 53, 75, 82, 100, 101, 102, 108

Selcall 2, 4, 5, 27, 28, 29, 30, 31, 32, 33, 35, 37, 38, 39, 40, 41, 42, 43, 47, 48, 50, 52, 56, 57, 76, 79, 85, 88, 96, 97, 98, 188, 211

Selcall ID 33, 35, 41, 42, 48, 50, 52, 79

Self ID 5, 29, 31, 33, 42

Self IDs 31

Serial Number 60, 61

Specifications

Receiver 189

Transmitter 190

SSL Mute 88

Status Call 52

Sub-group Call 79

Swipe Menu 21

T

Telcall 2, 5, 30, 32, 38, 41, 42

Tuning 75, 107, 142, 144, 149, 150, 165, 166, 168

V

Version Information 60

Voice Call 17, 26

Voice Mute 88, 89

VSWR 107

AUSTRALIA

(Head office and Manufacturing)

Barrett Communications Pty Ltd

47 Discovery Drive, Bibra Lake, WA 6163 Australia

Tel: +61 8 9434 1700

Email: info@barrettcomms.com

UK

(European office)

Barrett Communications - Europe

Unit 9, Fulcrum 2, Solent Way, Whiteley, Hampshire, PO15 7FN United Kingdom

Tel: +44 (0) 1489 880 332

Email: uksales@barrettcommunications.co.uk

USA

(US office and Manufacturing)

Barrett Communications USA Corp.

190 Office Park Way, Pittsford, NY 14534 United States of America

Tel: +1 585 582 6134

Email: sales@barrettusa.com